CONTRACT DATA REQUIREMENTS LIST
DD FORM 1423 (MECHANIZED)
CATEGORY: MISC SYSTEM/ITEM: FILTER,ORFICE
TO CONTRACT/PR: C21IAAXX

1. SEQUENCE NUMBER
14. DISTRIBUTION DRFT/REG/REPRO COPIES
2. TITLE OF DATA ITEM
3. SUBTITLE
4. DATA ITEM NUMBER
5. CONTRACT REFERENCE
6. TECHNICAL OFFICE 7. DD 250 8. APP CODE 9. DIST STATEMENT REQUIRED
10. FREQUENCY 11. AS OF DATE 15. TOTAL:
12. DATE OF 1ST SUBMISSION 13. DATE OF SUBSEQUENT SUBMISSION
16. REMARKS

---

1. A001
14. SEE ADDRESS CODE / /
2. ENGINEERING CHANGE PROPOSAL (ECP) DISTRIBUTION / /
3. * ATTACHED / /
4. DI-CMAN-80639B
5. MIL-STD-973
6. AMSSB-RSO-ADM(RI) 7. LT 8. - 9.**
10. ASREQ 11. --- 15. TOTAL 0/ 0/ 0
12. ASREQ 13.
16. REMARKS
ECP SHORT FORM SHALL BE USED FOR THE SUBMISSION AND PROCESSING OF ALL CLASS II ENGINEERING ACTIONS. **DISTRIBUTION STATEMENT WILL BE ASSIGNED AND IMPLEMENTED BY THE DOD CONFIGURATION MANAGER.

---

1. A002
14. SEE ADDRESS CODE / /
2. REQUEST FOR DEVIATION (RFD) DISTRIBUTION / /
3. ATTACHED / /
4. DI-CMAN-80640B
5. MIL-STD-973
6. AMSSB-RSO-ADM(RI) 7. LT 8. - 9.**
10. ASREQ 11. --- 15. TOTAL 0/ 0/ 0
12. ASREQ 13.
16. REMARKS
**DISTRIBUTION STATEMENT WILL BE ASSIGNED AND IMPLEMENTED BY THE DOD CONFIGURATION MANAGER.



Exhibit A

1. A003

2. REQUEST FOR WAIVER (RFW)

3.

4. DI-CMAN-80641B

5. MIL-STD-973

6. AMSSC-HB-ADM(RI) 7. LT 8. - 9.**

10. ASREQ 11. ---

12. ASREQ 13.

14.
SEE ADDRESS CODE / /
DISTRIBUTION / /
ATTACHED / /

15. TOTAL 0/ 0/ 0

16. REMARKS
**DISTRIBUTION STATEMENT WILL BE ASSIGNED AND IMPLEMENTED BY THE DOD CONFIGURATION MANAGER.

---

1. A004

2. NOTICE OF REVISION (NOR)

3.

4. DI-CMAN-80642B

5. MIL-STD-973

6. AMSSB-RSO-ADM(RI) 7. LT 8. - 9.**

10. ASREQ 11. ---

12. ASREQ 13.

14.
SEE ADDRESS CODE / /
DISTRIBUTION / /
ATTACHED / /

15. TOTAL 0/ 0/ 0

16. REMARKS
THE CONTRACTOR SHALL PREPARE AND SUBMIT A NOR FOR EACH DRAWING, ASSOCIATED LIST, OR OTHER REFERENCED DOCUMENT WHICH REQUIRE REVISION AFTER ECP APPROVAL. **DISTRIBUTION STATEMENT WILL BE ASSIGNED AND IMPLEMENTED BY THE DOD CONFIGURATION MANAGER.

---

ALL THE ABOVE MAY BE SUBMITTED TO:

COMMANDER
U.S.ARMY SOLDIER AND BIOLOGICAL CHEMICAL COMMAND (SBCCOM)
ATTN: AMSSB-RSO-ADM (CDE QA CELL) BLDG.62,1st floor,West Wing
ROCK ISLAND,IL 61299-7390

---

APPROVED BY: STEPHEN J HANSEN, SDMO, AMSTA-AR-QAD DATE: 04/16/01

# INSTRUCTIONS FOR COMPLETING DD FORM 1423

(See DoD 5010.12-M for detailed instructions)

## FOR GOVERNMENT PERSONNEL

**Item A.** Self-explanatory.

**Item B.** Self-explanatory.

**Item C.** Mark (X) appropriate category: TDP - Technical Data Package; TM - Technical Manual; Other - other category of data, such as AProvisioning≅, AConfiguration Management≅, etc.

**Item D.** Enter name of system/item being acquired that data will support.

**Item E.** Self-explanatory (to be filled in after contract award).

**Item F.** Self-explanatory (to be filled in after contract award).

**Item G.** Signature of preparer of CDRL.

**Item H.** Date CDRL was prepared.

**Item I.** Signature of CDRL approval authority.

**Item J.** Date CDRL was approved.

**Item 1.** See DoD FAR Supplement Subpart 4.71 for proper numbering.

**Item 2.** Enter title as it appears on data acquisition document cited in Item 4.

**Item 3.** Enter subtitle of data item for further definition of data item (optional entry).

**Item 4.** Enter Data Item Description (DID) number, military specification number, or military standard number listed in DoD 5010.12-L (AMSDL), or one-time DID number, that defines data content and format requirements.

**Item 5.** Enter reference to tasking in contract that generates requirement for the data item (e.g., Statement of Work paragraph number.

**Item 6.** Enter technical office responsible for ensuring adequacy of the data item.

**Item 7.** Specify requirement for inspection/acceptance of the data item by the Government.

**Item 8.** Specify requirement for approval of a draft before preparation of the final data item.

**Item 9.** For technical data, specify requirement for contractor to mark the appropriate distribution statement on the data (ref. DoD 5230.r\24).

**Item 10.** Specify number of times data items are to be delivered.

**Item 11.** Specify as-of date of data item, when applicable.

**Item 12.** Specify when first submittal is required.

**Item 13.** Specify when subsequent submittals are required, when applicable.

**Item 14.** Enter addressees and number of draft/final copies to be delivered to each addressee. Explain reproducible copies in Item 16.

**Item 15.** Enter total number of draft/final copies to be delivered.

**Item 16.** Use for additional/clarifying information for Items 1 through 15. Examples are: Tailoring of documents cited in Item 4; Clarification of submittal dates in Items 12 and 13; Explanation of reproducible copies in Item 14; Desired medium for delivery of the data item.

## FOR THE CONTRACTOR

**Item 17.** Specify appropriate price group from one of the following groups of effort in developing estimated prices for each data item listed on the DD Form 1423.

a. Group I. Definition - Data which is not otherwise essential to the contractor=s performance of the primary contracted effort (production, development, testing and administration) but which is required by DD Form 1423.

Estimated Price - Costs to be included under Group I are those applicable to preparing and assembling the data item in conformance with Government requirements, and the administration and other expenses related to reproducing and delivering such data items to the Government.

b. Group II. Definition - Data which is essential to the performance of the primary contracted effort but the contractor is required to perform additional work to conform to Government requirements with regard to depth of content, format, frequency of submittal, preparation, control, or quality of the data item.

Estimated Price - Costs to be included under Group II are those incurred over and above the cost of the essential data item without conforming to Government requirements, and the administrative and other expenses related to reproducing and delivering such data item to the Government.

c. Group III. Definition - Data which the contractor must develop for his internal use in performance of the primary contracted effort and does not require any substantial change to conform to Government requirements with regard to depth of content, format, frequency of submittal, preparation, control, and quality of the data item.

Estimated Price - Costs to be included under Group III are the administrative and other expenses related to reproducing and delivering such data item to the Government.

d. Group IV. Definition - Data which is developed by the contractor as part of his normal operating procedures and his effort in supplying these data to the Government is minimal.

Estimated Price - Group IV items should normally be shown on the DD Form 1423 as no cost.

**Item 18.** For each data item, enter an amount equal to that portion of the total price which is estimated to be attributable to the production or development for the Government of that item of data. These estimated data prices shall be developed only from those costs which will be incurred as a direct result of the requirement to supply the data, over and above those costs which would otherwise be incurred in performance of the contract if no data were required. These estimated data prices shall not include any amount for rights in data. The Government=s right to use the data shall be governed by the pertinent provisions of the contract.

GUIDANCE ON DOCUMENTATION OF CONTRACT REQUIREMENTS LIST (CDRL)

The following information is furnished to provide guidance with respect to the abbreviations and codes utilized in various blocks of DD Form 1423, Contract Data Requirements List.

Block 1. Sequence Number. This number is specified by DOD components in accordance with FAR Supplement Subpart 4.71.

Block 2. Title of Description of Data. This represents the title or brief description of the data. This title should be identical to the Data Item Description (DID) title with Block 3 being used for further identification, if required.

Block 3. Subtitle of Data. If the title requires further identification, a subtitle is entered.

Block 4. Authority, Data Item Number. Data item number of the DID which provides the data preparation instructions.

Block 5. Contract Reference. The specific paragraph number of the contract procurement request, system specification, or other applicable document which identifies the effort associated with the data item authorized by Block 4 above.

Block 6. Technical Office. The office that is responsible for assuring the adequacy of the data item unless this responsibility is delegated elsewhere in the contract or in Block 7 on the DD Form 1423.

Block 7. DD Form 250 Requirement. This block designates the location (contractor's facility or destination) for performance of Government inspection and acceptance. The applicable codes for inspection and acceptance are cited below. The Government activity to perform the destination acceptance task is entered in Block 14 as the first addressee.

| Code | Inspection | Acceptance |
|---|---|---|
| SS | *Source(DD Form 250) | *Source(DD Form 250) |
| DD | Destination(DD Form 250) | Destination(DD Form 250) |
| SD | *Source(DD Form 250) | Destination(DD Form 250) |
| DS | Destination(DD Form 250) | *Source(DD Form 250) |
| LT | Letter of Transmittal only | |
| NO | No inspection or acceptance required | |
| XX | Inspection/acceptance requirements specified elsewhere in the contract. | |

*Source indicates contractor's facility,

Block 8. Approval Code. Items of critical data requiring specified advanced written approval, such as test plans, are identified by an "A" in this field. This data requires submission of a preliminary draft prior to publication of the final document. When advanced approval is not required, this field is blank.

Block 9. Distribution Statement Required. The code letter corresponding to the distribution statement to be marked on the technical data item by the contractor, in accordance with DoD Directive 5230.24 and the guidance in DoD 5010.12-M.

Block 10. Frequency. The codes that appear in this block are cited below:

| | | | |
|---|---|---|---|
| ANNLY | Annually | ASGEN | As generated* |
| ASREQ | As required* | BI-MO | Every 2 months |
| BI-WE | Every 2 weeks | DAILY | Daily |
| DFDEL | Deferred Delivery | MTHLY | Monthly |
| ONE/P | One Preliminary | ONE/R | One time with revisions |
| QRTLY | Quarterly | R/ASR | Revision as required* |
| SEMIA | Every 6 months | WEKLY | Weekly |

XTIME** Number of time to be submitted (1TIME, 2TIMES, etc.)

*Use of these codes requires further explanation in block 16 to provide the contractor with guidance necessary to accurately price the deliverable data item.

**A number must be inserted in place of the "X".

Block 11. As of Date (AOD). When data it submitted only once, this block indicates the number of days the data is to be submitted prior to the end of the reporting period; e.g., "15" would place the AOD for this report as 15 days before the end of each month, quarter, or year depending on the frequency established in Block 10; "0" places the AOD at the end of the month, quarter, or year. Further guidance is shown in Block 13 or 16 as required.

Block 12. Date of First Submission. This block indicates the initial data submission date (Year/Month/Day). When the contract start date has not been established, this block indicates the number of days after the contract start date that the data is due; e.g., 30 days after contract (DAC). Further information, if required is contained in Block 13. "DFDEL" indicates deferred delivery.

Block 13. Date of Subsequent Submission/Event Identification. When data is submitted more than once, the date(s) of subsequent submission(s) is indicated in this block. Example: "Not later than (NLT) 15 days before start of production"; "45 days before first article", etc.

Block 14. Distribution and Addressees. Addressees and number of copies (draft/regular/reproducible) to be forwarded to each addressee as cited in this block. Addressees are indicated by office symbols (i.e., AMSIO-XYZ). A list explaining these symbols and their addressees is attached to the form. When reproducible copies are required, the type of copies required will be cited in this block or Block 16.

NOTE: Unless otherwise cited in Block 10 of DD Form 1664, entries in Blocks 3 through 9 on DD Form 1664, Data Item Descriptions, are for information purposes only and are not contractually binding.

NOTE: It is required that data items be delivered using electronic media. Where possible electronic transmission (e-mail) is the most preferred method. Refer to the Contract Data Requirements List (CDRL), DD Form 1423 for more specific information (i.e., e-mail addresses, etc.)

For narrative kinds of reports, submission of a 3 1/2 inch disk in Rich Text Format (RTF), Microsoft Word or by e-mail is acceptable.

For spreadsheets or database kinds of reports, the acceptable software packages would be Microsoft Office products, i.e., Access or Excel. If these packages are not available, the information could be forwarded using a word processing kind of document saved in a Rich Text Format (RTF).

# SECTION C

TDPL: 25-3-166 TDPL DATED: 20 Feb 01 START #: C21IAAXX

NSN: 6665-00-778-3482 NOMEN: Filter, Orifice

---

The following engineering exceptions apply to this TDPL, and shall be incorporated into solicitations/contracts for the above listed PRON(s):

1. Unless otherwise specified, the issues of the specifications and standards which are DOD adopted shall be those listed in the DODISS and its supplements which are current on the date of the solicitation. Unless otherwise specified, the issues of specifications and standards not listed in the DODISS shall be the issue of the nongovernment specifications and standards which were current on the date of the solicitation.

2. TDPL, under SPECIFICATIONS AND STANDARDS, and the following entry:

ASTM D5486 Tape, Packaging, Paper **

3. Drawing 25-3-166, change note 3 as follows:

From: FITER MATERIAL (ZITEC) SHEET, TEFLON 30-60 MICRON, 25.5 MILS THICKNESS, PART NO K1064-122, H4-2 MFG CODE NO. 18632

To: FITER MATERIAL (ZITEC) SHEET, TEFLON 30-60 MICRON, 18-25 MILS THICKNESS, PART NO K1064-122, CAGE CODE 18632.

4. Contact information for note 3 material: Norton Performance Plastics Inc., 150 Dey Road, Wayne, NJ 07470. Phone number 800-526-7844.

5. SPI P25-3-166, Level A Unit Pack Requirements, under column DRAWING OR SPECIFICATION, change as follows:

From: PPP-F-320 To: ASTM D4727

6. SPI P25-3-166, in REMARKS section, note *, change as follows:

From: PPP-T-76 To: ASTM D5486, Type V

7. SPI P25-3-166, in REMARKS section, note ****, change as follows:

From: Intermediate package quantity shall be ten unit packs. Intermediate container shall be PPP-B-636 fiberboard box, style RSC, grade W6c, class WR, size 9 x 3 ½ x 3 I.D. Closure shall be

Attachment 002

accomplished in accordance with PPP-B-636, appendix. A grade W5c box may be substituted.

To: Intermediate package quantity shall be ten unit packs. Intermediate container shall be ASTM D5118 fiberboard box, style RSC, grade W6c, class WR, size 9 x 3 ½ x 3 I.D. Closure shall be accomplished in accordance with ASTM D1974. A grade W5c box may be substituted.

8. Shelf life marking is not required for this item.

9. The following Statement of Work for Ozone Depleting Chemicals also applies:

STATEMENT OF WORK - OZONE DEPLETING CHEMICALS

I.a. The following specifications and standards may be listed and included as part of this Technical Data Package (TDP)/ Scope of Work (SOW):

MIL-STD-2073/1

b. Other specifications and standards, which identify ODCs among alternative substances for use, are part of this TDP/SOW as follows:

c. The above specifications and standards allow the optional use of Ozone Depleting Substances (ODS) or Ozone Depleting Chemicals (ODC). Preference should be given to the Non-ODS/ODC choices in compliance with Executive Order 12843, dated April 21, 1993, "Procurement Requirements and Policies for Federal Agencies for Ozone Depleting Substances".

II. Other specifications and standards containing ODS/ODC materials and included in this TDP for which a substitute is provided are as follows:

N/A

III. Other specifications and standards included in this TDP that specify use of an ODS/ODC and have been approved for use are as follows:

N/A

IV. NOTE: Offerers are requested, although not obligated, to perform their own screening of the TDP specifications and standards

or SOW and identify any additional potential ODS/ODC to the contracting officer.

---

Name (POC): Dale Gustafson OFFICE: AMSSB-RSO-IPM (RI)

PHONE: DSN 793-8025 MYLARS REQUIRED: No

RESUBMITTAL: No DATE: 23 Mar 01

DOCUMENT SUMMARY LIST

Item: FILTER, ORFICE
NSN: 6665-00-778-3482
Control Number/PRON: C21IAAXX

Identifies all first tier documents (cited in SOW) (applicable DIDs). Also included are all referenced documents (2nd, (includes DID block 10 references), 3rd and lower tier) which have been tailored.

DOCUMENT CATEGORY:

CATEGORY O - Unless otherwise specified in the solicitation, contract, or contract modifications, all documents are for guidance and information only.

CATEGORY 1 - The requirements contained in the directly cited document are contractually applicable to the extent specified. All referenced documents are for guidance and information only.

CATEGORY 2 - The requirements contained in the directly cited document and the reference documents identified in the directly cited document are contractually applicable to the extent specified. All subsequently referenced documents are for guidance and information only.

CATEGORY 3 - Unless otherwise specified in the solicitation, contract or contract modification, all requirements contained in the directly cited document and all reference and subsequently referenced documents are contractually applicable to the extent specified.

| Document Number (Contract Reference) Applicable Tailoring | Document Title | Document Date/ Document Category |
|---|---|---|
| 1a. MIL-STD-973 | Configuration Management | 17 Apr 92<br>Cat 2 |

See section C clause(s) titled: Value Engineering Change Proposals, Engineering Change Proposals, Deviation and/or Ozone-Depleting Substances.

In the application of MIL-STD-973 Paragraphs 5.4.3, 5.4.4 and 5.4.8 apply, and are tailored as follows:

(1) Page 53, para 5.4.3.4., Delete "a contractor designed form, or a letter" in the first sentence.

(2) Page 53, para 5.4.3.3.2a., Line 5, add "or size" after "weight".

(3) Page 53, Delete para 5.4.3.5., and replace by, "Unless otherwise specified in the contract, requests for critical deviations should be approved or disapproved within 30 calendar days of receipt by the Government and for all other deviations within 60 calendar days of receipt by the Government."

(4) Para 5.4.3.5.1. Minor deviations.
Line 3. Delete "...by the activity...Class II change" and insert "by the Contracting Officer."

(5) Page 55, para 5.4.4.3.2a., Line 7, add "or size" after "weight".



Attachment 003

(6) Page 56.Delete paragraph 5.4.4.5 and replace by "Unless otherwise specified in the contract requests for critical waivers should be approved or disapproved within 30 calendar days of receipt by the Government and for all other RFWs within 60 calendar days of receipt by the Government."

(7) Para 5.4.4.5.1. Minor waivers.
Lines 4 and 5. Delete "...Contract Administration Office (CAO)." Insert "...Configuration Manager and a Government Contracting Officer."

(8) Page 61, para 5.4.8.3.4., in line 6 add "or size" after "weight".

(9) Page 61, Add new para 5.4.8.3.4.1., "An RFD shall be supported by test data and analysis, where appropriate, and provided to support the decision regarding acceptance of the nonconformance."

(10) Page 61, Delete para 5.4.8.3.5. and replace by, "Unless otherwise specified in the contract, deviations are approved and authorized only by the Contracting Officer. Critical deviations should be processed within 30 calendar days of receipt by the Government and all other RFDs processed within 60 calendar days of receipt by the Government."

(11) Page 62, para 5.4.8.4, Delete lines 7 thru 10 and replace with "standard. All RFWs shall be submitted as specified in the contract for approval or disapproval and acceptance or rejection by the authorized Contracting Officer."

(12) Page 62, para 5.4.8.4.4., on line 6 add "or size" after "weight".

(13) Page 62, Add new para 5.4.8.4.4.1., "an RFW shall be supported by test data and analysis, where appropriate, and provided to support the decision regarding acceptance of the nonconformance."

| | | |
|---|---|---|
| 1b. Interim Notice 3 (DO) | Configuration Management | 13 Jan 95<br>Cat 2 |
| 1c. DI-CMAN-80639B<br>(seq A001) | Engineering Change Proposal | 13 Jan 95<br>Cat 2 |
| 1d. DI-CMAN-80640B<br>(seq A002) | Request for Deviation | 13 Jan 95<br>Cat 2 |
| 1e. DI-CMAN-80641B<br>(seq A003) | Request for Waiver | 13 Jan 95<br>Cat 2 |
| 1f. DI-CMAN-80642B<br>(seq A004) | Notice of Revision | 13 Jan 95<br>Cat 2 |
| 2. ANSI/ISO/ASQC Q9002<br>or equivalent | Model for Quality Assurance in<br>Production, Installation & Servicing | 18 Jul 94 |

# ADDRESS CODE DISTRIBUTION – for ECPs.RFDs/RFWs/VECPs

**(Configuration Management)**

1. Concurrent transmittal of Engineering Change Proposals (ECPs), Requests for Deviation (RFDs), Requests for Waivers (RFWs) or Value Engineering Change Proposals (VECPs) shall be submitted by the Contractors by either emailing or faxing engineering actions as follows:

2. The contractor shall electronically transmit copies to:

   a. (SBCCOM (RI) Engineering Office)
      OFFICE: AMSSB-RSO-IPM (RI)
      POC: Dale Gustafson
      EMAIL: gustafsond@ria.army.mil
      FAX: (309) 782-4651

   b. (Contracting Officer)
      OFFICE: AMSTA-CM-CREC
      POC: Joyce L. Klein
      EMAIL: kleinj@ria.army.mil
      FAX: (309) 782-1218

   c. Administrative Contracting Officer

3. For VECPs only:

   a. (Design Agency)
      OFFICE: AMSSB-REN-R (A)
      POC: Kimberly Walton
      EMAIL: krwalton@sbccom.apgea.army.mil
      FAX: (410)436-3912

Attachment 004

# LIST OF ADDRESSES

(see block 14 of DD Form 1423 for symbols that apply)

Commander
U.S. Army TACOM-RI
ATTN: AMSTA-CM-CREC
Rock Island, IL 61299-7630

Commander
U.S. Army TACOM-RI
ATTN: AMSTA-LCRS
Rock Island, IL 61299-7630

Commander
U.S. Army Soldier and Biological Chemical Command
ATTN: AMSSB-RSO-ADM (RI)
Rock Island, IL 61299-7390

Commander
U.S. Army Soldier and Biological Chemical Command
ATTN: AMSSB-RSO-IPM (RI)
Rock Island, IL 61299-7390

Commander
U.S. Army Soldier and Biological Chemical
ATTN: AMSSB-RIM-____ or AMSSC-RIM-____ (N)
Kansas Street
Natick, MA 01760-5052

Commander
U.S. Army Soldier and Biological Chemical Command
ATTN: AMSSB-REN-____ (A)
Aberdeen Proving Ground, MD 21010-5423

Attachment 005

Attachment 006

NOTES:

1. THIS DRAWING SHALL BE INTERPRETED IN ACCORDANCE WITH APPLICABLE STANDARDS LISTED IN DOD-STD-100.
2. THE FOLLOWING ARE MANDATORY WHEN INDICATED BY ■
   - ☐ REMOVE BURRS ☐ BREAK SHARP EDGES .010 MAX
   - ☐ FILLETS R .010 MAX
   - ☐ 125 ✓ ALL OVER, EXCEPT AS NOTED
   - ☐ DIMENSIONS APPLY AFTER PLATING
   - ☐ TOLERANCES ON STOCK MATERIAL SIZES, SHALL BE AS SPECIFIED IN APPLICABLE SPECIFICATIONS.
   - ☐ ANSI Y14.5-DATED APPLIES
   - ☐ FED-STD-H28 APPLIES
3. FILTER MATERIAL (ZITEX), SHEET, TEFLON 30-60 MICRON, 25.5. MILS THICKNESS, PART NO. K1064-122, H4-2 MFG CODE NO. 18632

   ONLY THE ITEM DESCRIBER ON THIS DRAWING WHEN PROCURED FROM THE VENDOR(S) LISTED HEREON, IS APPROVED BY AMCCOM FOR USE IN THE APPLICATION LISTED HEREON. A SUBSTITUTE ITEM SHALL NOT BE USED WITHOUT PRIOR APPROVAL BY AMCCOM.

   IDENTIFICATION OF THE APPROVED SOURCE OF SUPPLY HEREON IS NOT TO BE CONSTRUED AS A GUARENTEE OF PRESENT OR CONTINUED AVAILABILITY AS A SOURC OF SUPPLY FOR THE ITEM DESCRIBED ON THE DRAWING.

| REVISIONS | | | |
|---|---|---|---|
| LTR | DESCRIPTION | DATE (YR-MO-DA) | APPROVED |
| F | REPLACES B25-3-166 REV E DATED 26 JAN 79 WITHOUT CHANGE | 15MAR86 | JSR |
| G | NOR 397-293-007, 83-10-18<br>NOR S7H3095-0001, 87-11-25 | 93-03-24 | KN |

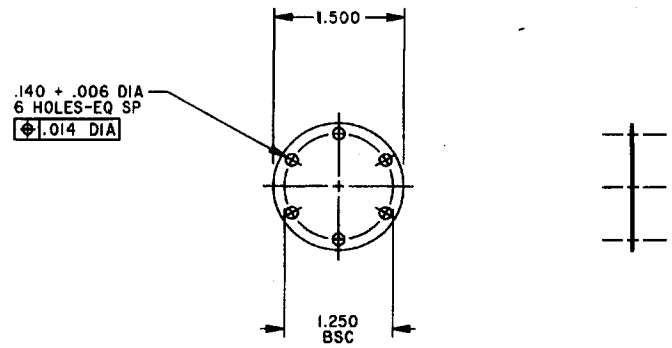


| QTY REQD | DWG SIZE | DRAWING OR PART NO. | NOMENCLATURE OR MATERIAL | SPECIFICATION | ITEM NO. |
|---|---|---|---|---|---|

PARTS LIST

| APPLICATION | |
|---|---|
| DWG SIZE | NEXT ASSY |
| SEE | ENGR RECORD |

| END ITEM CODE NO. | | |
|---|---|---|
| SEE | ENGR | RECORD |

UNLESS OTHERWISE SPECIFIED
DIMENSIONS ARE IN INCHES
TOLERANCES ON:
2 PLACE DECIMALS ±.04
3 PLACE DECIMALS ±.010
ANGLES ± 0° 30′

MATERIAL

NOTE 3

ORIGINAL DATE (YR-MO-DA): 6 AUG 52
DRAWN BY: JL
CHECKER: GRC
SUBMITTED: GEORGE R. COLE SR.
DESIGN APPROVAL: JOSEPH SUTTLE
DRAWING APPROVAL: J.T. BRENNAN
CONTRACT NO.

U.S. ARMY ARMAMENT, MUNITIONS & CHEMICAL COMMAND
CHEMICAL RESEARCH, DEVELOPMENT AND ENGINEERING CENTER
ABERDEEN PROVING GROUND, MARYLAND, 21010-5423

FILTER, ORIFICE

| SIZE | CAGE CODE | DWG NO. |
|---|---|---|
| C | 81361 | C25-3-166 |

SCALE 1/1 SHEET 1 OF 1