REVISIONS			
SYM	DESCRIPTION	DATE	APPROVAL
A	INC ECO RETS-1462	850210	
-	PROD REL ERR F5X5000	850211	

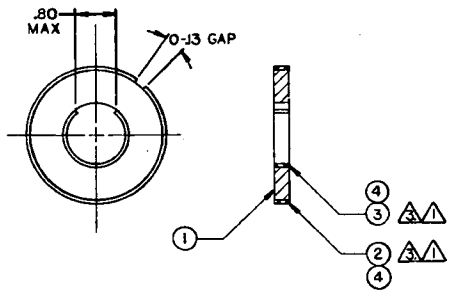

NOTES:

1. BOND ITEMS 2 AND 3 TO ITEM 1 USING ITEM 4.
2. ALL EXPOSED SURFACES TO BE FREE OF ITEM 4.
3. ITEMS 2 AND 3 TO BE FLUSH OR BELOW SURFACES OF ITEM 1.
4. BAG AND TAG WITH PART NO. PER MIL-STD-130.

SEE SEPARATE PARTS LIST

PART NO. 11829349

NEXT ASSY	USED ON
11829348	1RETS

APPLICATION

MECHANICAL PROPERTIES

DO NOT SCALE DRAWING
UNLESS OTHERWISE SPECIFIED DIMENSIONS ARE IN INCHES
TOLERANCES ON DECIMALS ± ——
FRACTIONS ± —— ANGLES ± ——

ORIGINAL DATE OF DRAWING 82-9-14

U S ARMY ARMAMENT RESEARCH AND DEVELOPMENT COMMAND
DOVER, NEW JERSEY 07801

SENSOR ELEMENT ASSY.

HIT SENSOR ELECTRONICS

SIZE C | CODE IDENT NO. 19200 | 11829349

SCALE 1/1 | WGHT WT. | SHEET 1 OF

DRAWING SIZE C
(ARRADCOMR 70-12)

REVISIONS			
SYM	DESCRIPTION	DATE	APPROVAL
A	INC ECO 1496	85 02-11	
—	PROD RELEASE ERR F5X5000	85-02-11	
B	INC NOR F6I4166 86-10-01	87-03-10	
C	NOR D3I2002 93-04-06	931115	

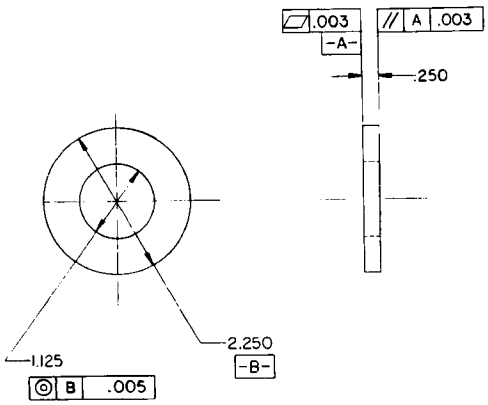

NOTES:

1. CERAMIC ELEMENT RING, TYPE I PER DOD-STD-1376, THICKNESS POLARIZED, FULLFIRED, SILVER ELECTRODE.

2. IDENTIFY PART WITH PART NO. 19200-11829351 PER MIL-STD-130 WITH .09 INCH HIGH BLACK CHARACTERS. PART NO. DESIGNATES POSITIVE SIDE.

PART NO. 11829351

DISTRIBUTION STATEMENT A
APPROVED FOR PUBLIC RELEASE;
DISTRIBUTION IS UNLIMITED.

NEXT ASSY	USED ON
11829349	1RETS

APPLICATION

MECHANICAL PROPERTIES: YP, TS, EL2, RA, BH, RH

DO NOT SCALE DRAWING
UNLESS OTHERWISE SPECIFIED DIMENSIONS ARE IN INCHES
TOLERANCES ON DECIMALS ± .015
FRACTIONS ± —— ANGLES ± ——

MATERIALS

ORIGINAL DATE OF DRAWING 79-12-5
DRAFTSMAN J WIMBISH
CHECKER
ENGR
ENGR
ENGR
ENGR
3/4/80
3/3/82
23 Jan 85

U S ARMY ARMAMENT RESEARCH AND DEVELOPMENT COMMAND
DOVER, NEW JERSEY 07801

RING
SENSOR ELEMENT

SIZE	CODE IDENT NO.	
C	19200	11829351
SCALE 1/1	UNIT WT.	SHEET 1 OF 1

ARRADCOM FORM 67 AUG 77 REPLACES DARPA FORM 1040 OCT 75 WHICH MAY BE USED UNTIL EXHAUSTED

DRAWING SIZE C
(ARRADCOMR 70-12)

REVISIONS			
SYM	DESCRIPTION	DATE	APPROVAL
A	INCORP ECO-0112 AND 0116	84-08-09	
B	INCORP. ECO-1276	85-02-06	
–	PRODUCTION RELEASE ERR FSXS000	85-02-11	
C	INC NOR D7I4626 87-11-16	88-01-20	
D	INC NOR D2I2017 92-09-02	93-06-03	

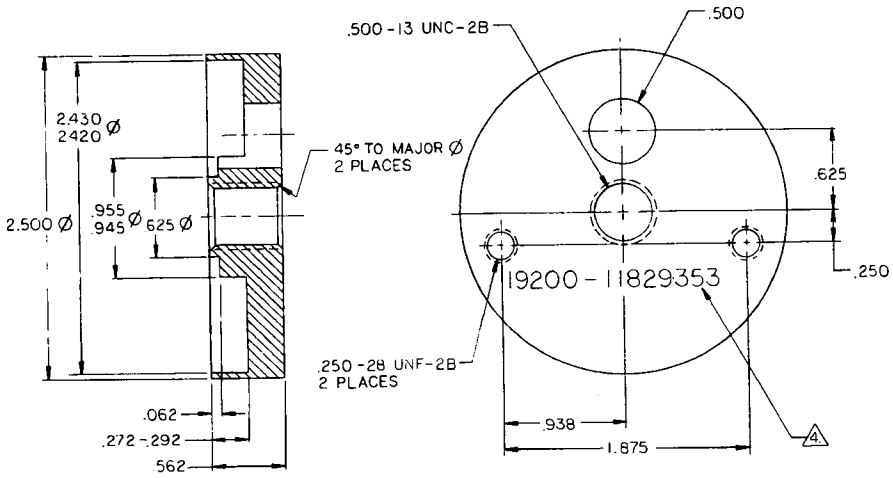

NOTES:

1. MATERIAL: COLD DRAWN LOW CARBON STEEL BAR, 1010 THROUGH 1050 PER ASTM A-108.
2. 125 ALL OVER.
3. REMOVE BURRS AND BREAK SHARP EDGES.
4. IDENTIFY WITH PART NO. PER MIL-STD-130, USING .12 HIGH CHARACTERS. LOCATE APPROXIMATELY AS SHOWN
5. FINISH PER MIL-F-14072, FINISH NO. M225. (OLIVE DRAB).
6. DIMENSIONING AND TOLERANCES PER ANSI Y14.5-1973.
7.
8. **SPEC MIL-F-13926 APPLIES.**

PART NO. 11829353

DISTRIBUTION STATEMENT A.
APPROVED FOR PUBLIC RELEASE; DISTRIBUTION IS UNLIMITED.

NEXT ASSY	USED ON
11829348	IRETS

APPLICATION

MECHANICAL PROPERTIES: YP, TS, EL2, RA, BH, RH

DO NOT SCALE DRAWING
UNLESS OTHERWISE SPECIFIED DIMENSIONS ARE IN INCHES
TOLERANCES ON DECIMALS ±.010
FRACTIONS ± —— ANGLES ± ——
MATERIAL: 1.
FINISH: 5.

ORIGINAL DATE OF DRAWING 79-11-16
DRAFTSMAN S. BAKER
CHECKER
ENGR
ENGR
ENGR
ENGR

U S ARMY ARMAMENT RESEARCH AND DEVELOPMENT COMMAND
DOVER, NEW JERSEY 07801

PLATE SENSOR ELEMENT
HIT SENSOR ELECTRONICS

SIZE	CODE IDENT NO.	
C	19200	11829353
SCALE 2/1	UNIT WT.	SHEET 1 OF 1

ARRADCOM FORM 87 AUG 77 REPLACES BARPA FORM 1040 OCT 73 WHICH MAY BE USED UNTIL EXHAUSTED