CONTRACT DATA REQUIREMENTS LIST
DD FORM 1423 (MECHANIZED)
CATEGORY: MISC SYSTEM/ITEM: V-MOUNT and MAAWS PICATINNY ASSY
TO CONTRACT/PR: M111S237/8

1. SEQUENCE NUMBER
14. DISTRIBUTION DRFT/REG/REPRO COPIES
2. TITLE OF DATA ITEM
3. SUBTITLE
4. DATA ITEM NUMBER
5. CONTRACT REFERENCE
6. TECHNICAL OFFICE 7. DD 250 8. APP CODE 9. DIST STATEMENT REQUIRED
10. FREQUENCY 11. AS OF DATE 15. TOTAL:
12. DATE OF 1ST SUBMISSION 13. DATE OF SUBSEQUENT SUBMISSION
16. REMARKS

---

1. A001

2. CONFIGURATION CHANGE CONTROL*
3. ENGINEERING ACTIONS

4. DI-CMAN-81554

5. SECTION C

6. AMSTA-AR-ES 7. NO 8. - 9. **

10. ASREQ 11. ---

12. ASREQ 13. ASREQ

14.
AMSTA-AR-CCL-F / /
(ECALS) / /

15. TOTAL 0/ 0/ 0

16. REMARKS
PREPARE ENGINEERING ACTIONS IAW DI-CMAN-81544 AND SUBMIT ELECTRONICALLY VIA ECALS WORLDWIDE WEB PAGE HTTP://EDMD4.PICA.ARMY.MIL/.*DATA INFORMATION PACKET **DISTRIBUTION STATEMENT WILL BE ASSIGNED AND IMPLEMENTED BY THE DOD CONFIGURATION MANAGER.THE POC FOR ECALS IS LEE SADAUSKAS,AMSTA-AR-QAW,(973)724-6626 LEES@PICA.ARMY.MIL.

---

1. A002

2. SPECIAL INSPECTION EQUIPMENT DESCRIPTIVE DOC.
3. AIE DESIGN DOCUMENTATION

4. DI-QCIC-81006*

5. SECTION E

6. AMSTA-AR-QA 7. XX 8. A 9. N/A

10. ONE/R 11.N/A

12. ** 13.WHEN REV.

14.
AMSTA-AR-QAC (1) / 1/
(D) / /
QAR / /
CO (LT ONLY) / /
AMSTA-AR-QAW-C (2) / /
(LT ONLY) (R) / /

15. TOTAL 0/ 1/ 0

16. REMARKS
* BLOCK 4: DO NOT ADDRESS PARAGRAPHS 10.1, 10.2, 10.4.1(f) AND 10.4.2. IGNORE ALL REFERENCE TO THE WORD "SPECIAL" IN DID. SUBMIT FOR ALL CRITICAL, SPECIAL AND MAJOR CHARACTERISTICS IN SPECIFICATION OR QAP.** BLOCK 12: SUBMIT 30 DAYS PRIOR TO FA,OR PRODUCTION,IF FA IS WAIVED. THE GOVERNMENT WILL RESPOND WITHIN 30 DAYS OF RECEIPT OF ORIGINALS AND REVISIONS.REVISIONS ARE TO BE SUBMITTED WITHIN 10 DAYS OF RECEIPT OF GOVERNMENT RESPONSE.IF DOCUMENTATION WAS APPROVED ON PRIOR CONTRACT AND NO CHANGES WERE MADE,SUBMIT

ONLY EVIDENCE OF PRIOR APPROVALS.
email: (1)aie-qac@pica.army.mil (2)amsta-ar-qa-cdrl@ria-emh2.army.mil
Text:Microsoft Office 97
Drawings:AutoCAD-Release 14(Expressed mailed hard copies will be accepted)
Files may be compressed using ZIP program.
WARNING: Large packages may cause delays in delivery using mail internet.
Email subject line must contain end item nomenclature.

---

1. A003

2. TEST PROCEDURE/ PHOSPHATE COATING PRE-
3. PRODUCTION PROCEDURE

4. DI-NDTI-80603*

5. MIL-DTL-16232,PARA 3.1

6. AMSTA-AR-WEP-RM 7. XX 8. A 9. N/A

10. ONE/R 11. N/A

12. 60 DAC 13. N/A

14.

PROCUREMENT	/ /
CONTRACTING	/ /
OFFICER	/ 1/

15. TOTAL 0/ 1/ 0

16. REMARKS
BLOCK 8 CONT.-PRIOR TO PRODUCTION, APPROVAL THROUGH THE CONTRACTING OFFICER IS REQUIRED WITHIN 60 DAYS AFTER CONTRACT AWARD. A DD FORM 250 IS NOT REQUIRED FOR PHOSPHATE COATING PROCEDURE APPROVAL. CONTRACTOR FORMAT ACCEPTABLE. SHALL BE SUBMITTED ON AN IBM COMPATIBLE 3-1/2" DISKETTE IN RICH TEXT FORMAT (RTF).

APPROVED BY: STEPHEN J HANSEN, SDMO, AMSTA-AR-QAD DATE: 03/21/2001

DOCUMENT SUMMARY LIST

Item: V-MOUNT and MAAWS PICATINNY ASSY
NSN: 1015-01-465-9189/90
Control Number/PRON: M111S237/8

Identifies all first tier documents (cited in SOW) (applicable DIDs). Also included are all referenced documents (2nd, (includes DID block 10 references), 3rd and lower tier) which have been tailored.

DOCUMENT CATEGORY:
CATEGORY O - Unless otherwise specified in the solicitation, contract, or contract modifications, all documents are for guidance and information only.

CATEGORY 1 - The requirements contained in the directly cited document are contractually applicable to the extent specified. All referenced documents are for guidance and information only.
CATEGORY 2 - The requirements contained in the directly cited document and the reference documents identified in the directly cited document are contractually applicable to the extent specified. All subsequently referenced documents are for guidance and information only.

CATEGORY 3 - Unless otherwise specified in the solicitation, contract or contract modification, all requirements contained in the directly cited document and all reference and subsequently referenced documents are contractually applicable to the extent specified.

Document Number (Contract Reference) Applicable Tailoring	Document Title	Document Date/ Document Category
1a. MIL-STD-2549 Table DIP 4-1	Configuration Management Data Interface	30 Jun 97 Cat 2
1b. DI-CMAN-81554 (seq A001) (Sec E)or equivalent	Configuration Change Control Data Information Packet	30 Jun 97 Cat 2
2. ANSI/ISO/ASQC Q9002 or equivalent	Model for Quality Assurance in Production, Installation & Servicing	18 Jul 94
3a. NCSL Z540-1 (ES7010)	General Requirements for Calibration Laboratories and Measuring and Test Equipment	30 Aug 94
	OR	
ISO 10012-1 (ES7010)	Quality Assurance Requirements for Measuring Equipment, Part 1: Metrological Confirmation System	1992
3b. DI-QCIC-81006 (DD Form 1423)	Special Inspection Equipment Descriptive Documentation	11 Sep 89 Cat 1
4a. MIL-DTL-16232G (TDPL)	Phosphate Coating Heavy Manganese or Zinc Base	07 Jan 00 Cat 2
4b. DI-NDTI-80603 (DD Form 1423)	Test Procedure	01 Jun 88 Cat 1

Note: The offeror shall fill in only the unit price blocks. All other spaces are for Government evaluation purposes only.

RFP: DAAE20-01-R-0114
Pricing Sheet

CLIN 0001

NSN: 1015-01-465-9190
Fire Control Device

Minimum Guaranteed Qty: 150 each

Range	Pricing Period 1 With FA Unit Price	Wgt.	Pricing Period 1 Without FA Unit Price	Wgt.	Pricing Period 2 Unit Price	Wgt.	Pricing Period 3 Unit Price	Wgt.	Total Amount
1 - 50		25%		25%		25%		25%	
51 - 150		50%		50%		50%		50%	
151 - 300		25%		25%		25%		25%	
Weighted Unit Price									
Most Likely Quantity	150		150		100		100		
Weighted Total Price									

CLIN 0002

NSN: 1015-01-465-9189
V Mount Assembly

Minimum Guaranteed Qty: 150 each

Range	Pricing Period 1 With FA Unit Price	Wgt.	Pricing Period 1 Without FA Unit Price	Wgt.	Pricing Period 2 Unit Price	Wgt.	Pricing Period 3 Unit Price	Wgt.	Total Amount
1 - 50		25%		25%		25%		15%	
51 - 150		50%		50%		50%		80%	
151 - 300		25%		25%		25%		5%	
Weighted Unit Price									
Most Likely Quantity	150		150		75		75		
Weighted Total Price									

Note: The offeror shall fill in only the unit price blocks. All other spaces are for Government evaluation purposes only.

RFP: DAAE20-01-R-0114
Pricing Sheet

CLIN 0003 **NSN: 1015-01-483-9968** **Minimum Guaranteed Qty: 100 each**

Rail for Fire Control Device

	Pricing Period 1 With FA		Pricing Period 1 Without FA		Pricing Period 2		Pricing Period 3		Total Amount
Range	Unit Price	Wgt.	Unit Price	Wgt.	Unit Price	Wgt.	Unit Price	Wgt.	
1 - 50		25%		25%		25%		25%	
51 - 150		50%		50%		50%		50%	
151 - 300		25%		25%		25%		25%	
Weighted Unit Price									
Most Likely Quantity	100		100		75		75		
Weighted Total Price									

CLIN 0004 **NSN: 1015-01-484-9926** **Minimum Guaranteed Qty: 100 each**

Handgrip

	Pricing Period 1 With FA		Pricing Period 1 Without FA		Pricing Period 2		Pricing Period 3		Total Amount
Range	Unit Price	Wgt.	Unit Price	Wgt.	Unit Price	Wgt.	Unit Price	Wgt.	
1 - 50		25%		25%		25%		25%	
51 - 150		50%		50%		50%		50%	
151 - 300		25%		25%		25%		25%	
Weighted Unit Price									
Most Likely Quantity	100		100		75		75		
Weighted Total Price									

TOTAL EVALUATED PRICE

PAST PERFORMANCE INFORMATION

(This page is intended as an aid for proposal submission. Please see Section L for instructions on proposal submission. If this form is used and more room is required, you may use the space at the bottom of the second page or continue on a separate sheet. Please note the limit on pages of proposal submission in Section L.)

CONTRACT NUMBER _____ Award Date _____

Description of Item:

1. Item: _____
2. Part Number: _____
3. NSN: _____
4. Product Description _____

Explanation of relevance to solicitation effort: _____

_____

_____

_____

Contract Dollar Value: $_____

Contracting Activity: (Government or Commercial) _____

(Address) _____

_____

Delivery schedule/performance: If the contract did not meet or is currently not meeting the original schedule(s), or technical performance requirements, provide a brief explanation of the reason(s) for the shortcoming, corrective actions taken to avoid recurrence, and the extent to which the corrective action has been successful. List each time the delivery schedule was revised and provide an explanation of why the revision was necessary. If there were none, please state "none". _____

_____

_____

_____(use additional sheets as required)

Attach copies of any cure notices or show cause letters received along with descriptions of any corrective actions taken.

Was the contract terminated? List the type and reason for termination. _____

_____

_____

_____

Were there any quality problems encountered in performance of the contract (i.e. internal/external customer complaints, lot/first piece failures, audit findings classified as major, etc.)? If so, please describe. Include a description of corrective actions implemented as a result of the problem encountered _____

_____

_____

_____

Significant achievements associated with contract performance: (i.e.technical Innovations and engineering changes that improved the quality of performance aspects of the delivered product, etc.)

_____

Points of Contact for Government and Non-Government positions:

1. Procuring Contracting Officer (name) _____
   (email) _____
   (phone) _____
   (FAX) _____

2. Current Admin Contracting Officer (name) _____
   (email) _____
   (phone) _____
   (FAX) _____

3. Gov't Quality Assurance Rep (QAR) (name) _____
   (email) _____
   (phone) _____
   (FAX) _____

4. Name/Job Title: _____
   (email) _____
   (phone) _____
   (FAX) _____
   (phone) _____

NOTES
1-APPLICABLE STANDARDS AND SPECIFICATIONS
A-MIL-STD-100E
B-ANSI Y14.5M-82
C-MIL-W-13855
2-MATERIAL: STEEL 4340, ASTM A304,A322,
3-BREAK ALL SHARP EDGES .01+.01 UNLESS. OTHERWISE SPECIFIED.
4-PROTECTIVE FINISH: FINISH 5.3.1.2 OR 5.3.2.2 OF MIL-STD-171.

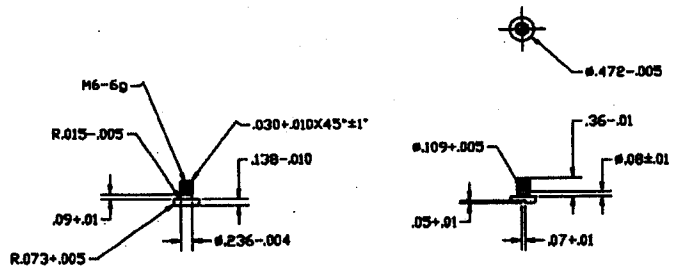

PART NO. GP6615-5

DISTRIBUTION STATEMENT X

DISTRIBUTION AUTHORIZED TO US GOVERNMENT AGENCIES AND PRIVATE INDIVIDUALS OR ENTERPRISES ELIGIBLE TO OBTAIN EXPORT-CONTROLLED TECHNICAL DATA INACCORDANCE WITH CONTROLLING DOD OFFICE IN CERTIFIED CONTRACTOR, 95-02-07.

SCREW, GRIP

C 19200 GP6615-5

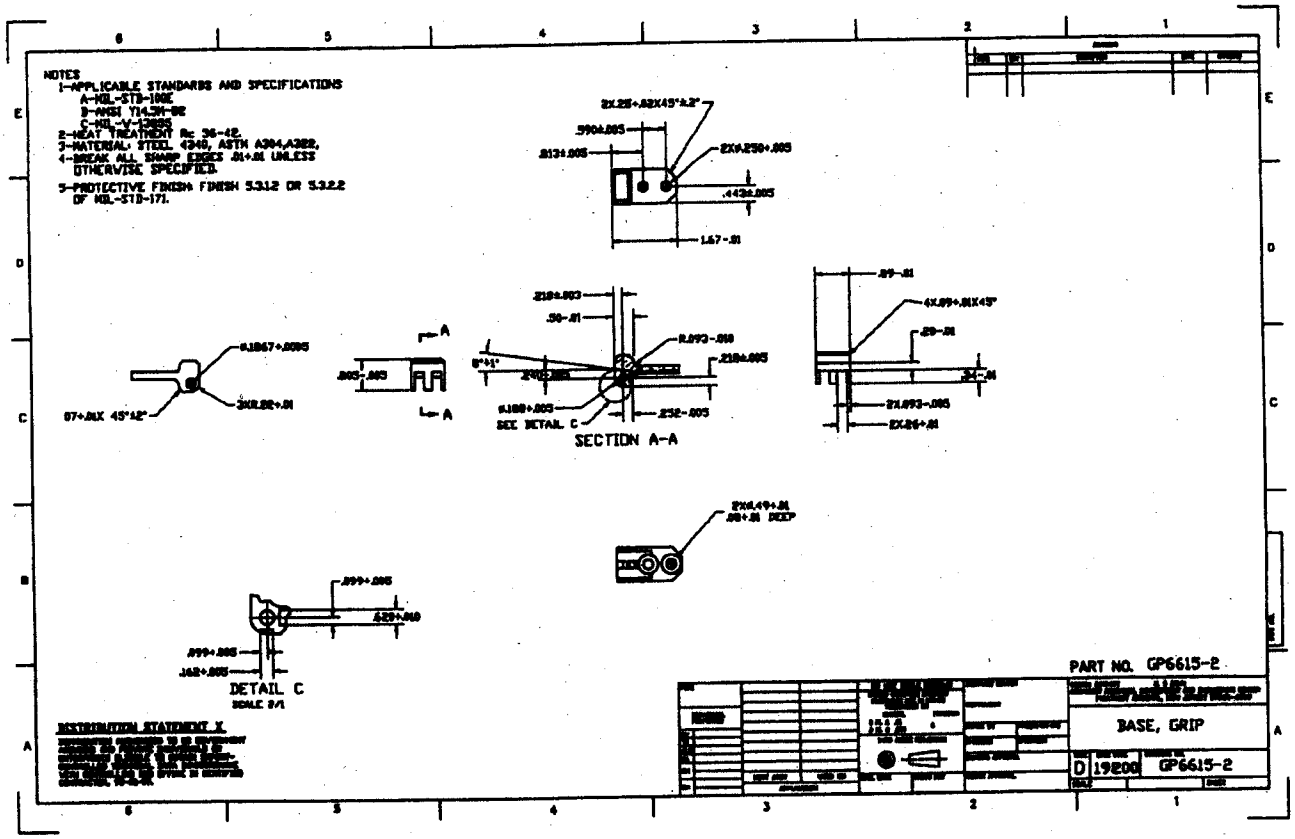
NOTES
1-APPLICABLE STANDARDS AND SPECIFICATIONS
A-MIL-STD-100E
B-ANSI Y14.5M-82
C-MIL-V-12805
2-HEAT TREATMENT Rc 36-42.
3-MATERIAL: STEEL 4340, ASTM A304,A388.
4-BREAK ALL SHARP EDGES .01+.01 UNLESS OTHERWISE SPECIFIED.
5-PROTECTIVE FINISH: FINISH 5.3.1.2 OR 5.3.2.2 OF MIL-STD-171.
SECTION A-A
SEE DETAIL C
DETAIL C
SCALE 2/1
DISTRIBUTION STATEMENT X
PART NO. GP6615-2
BASE, GRIP
D 19200 GP6615-2

NOTES
1-APPLICABLE STANDARDS AND SPECIFICATIONS
A-MIL-STD-100E
B-ANSI Y14.5M-82
C-MIL-W-13855
2-HEAT TREATMENT Rc 36-42.
3-MATERIAL: STEEL 4340, ASTM A304,A322,
4-BREAK ALL SHARP EDGES .01+.01 UNLESS OTHERWISE SPECIFIED.
5-PROTECTIVE FINISH: FINISH 5.3.1.2 OR 5.3.2.2 OF MIL-STD-171.

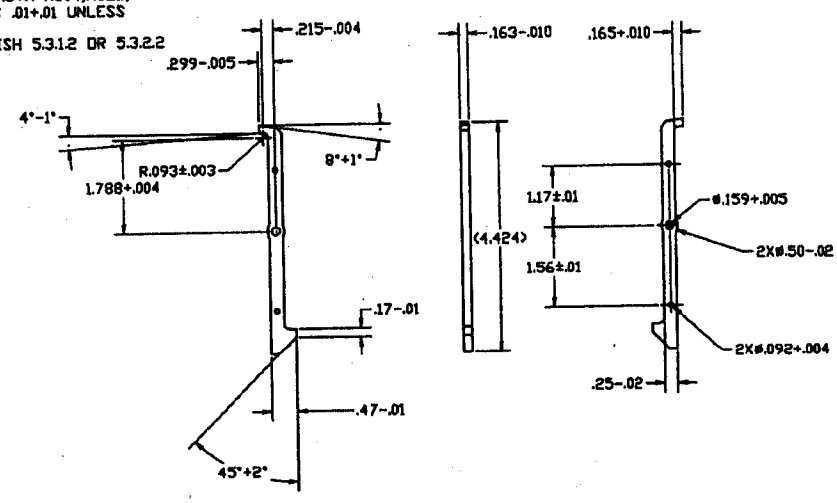

PART NO. GP6615-4

DISTRIBUTION STATEMENT X

DISTRIBUTION AUTHORIZED TO US GOVERNMENT AGENCIES AND PRIVATE INDIVIDUALS OR ENTERPRISES ELIGIBLE TO OBTAIN EXPORT-CONTROLLED TECHNICAL DATA INACCORDANCE WITH CONTROLLING DOD OFFICE IN CERTIFIED CONTRACTOR. 95-02-07.

DO NOT SCALE DRAWING

LATCH, GRIP

C 19200 GP6615-4

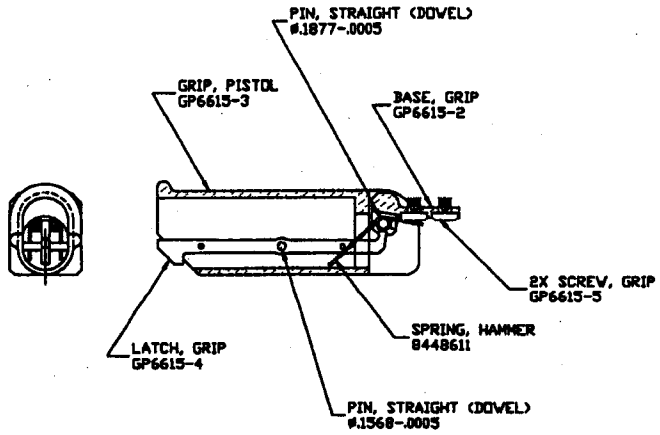

PART NO. GP6615-6

DISTRIBUTION STATEMENT X

DISTRIBUTION AUTHORIZED TO US GOVERNMENT AGENCIES AND PRIVATE INDIVIDUALS OR ENTERPRISES ELIGIBLE TO OBTAIN EXPORT-CONTROLLED TECHNICAL DATA IN ACCORDANCE WITH CONTROLLING DOD OFFICE IN CERTIFIED CONTRACTOR, 93-06-07.

GRIP ASSEMBLY
LOCKING, MAAWS

C | 19200 | GP6615-6

NOTES

1-APPLICABLE STANDARDS AND SPECIFICATIONS
A-MIL-STD-100C
B-ANSI Y14.5M-82
C-MIL-V-13855

2-MATERIAL: ALUMINUM 7075-T6, PER ASTM B211.

3-BREAK ALL SHARP EDGES .005+.010 UNLESS OTHERWISE SPECIFIED.

4-FINISH 250 UNLESS OTHERWISE SPECIFIED.

5-PROTECTIVE FINISH MIL-A-8625 TYPE III, CLASS 2, FILM THICKNESS .00104-.00082, COLOR TO BE BLACK

6-RUBBER COATING
MATERIAL:PERMATEX COLOR GUARD TOUCH RUBBER COATING.
COATING SHALL BE UNIFORM THICKNESS .020+.010 THICK
COLOR SHALL BE BLACK NO LIGHTER THEN GRAY.
COATING SHALL BE ON EXTERIOR SURFACE ONLY.

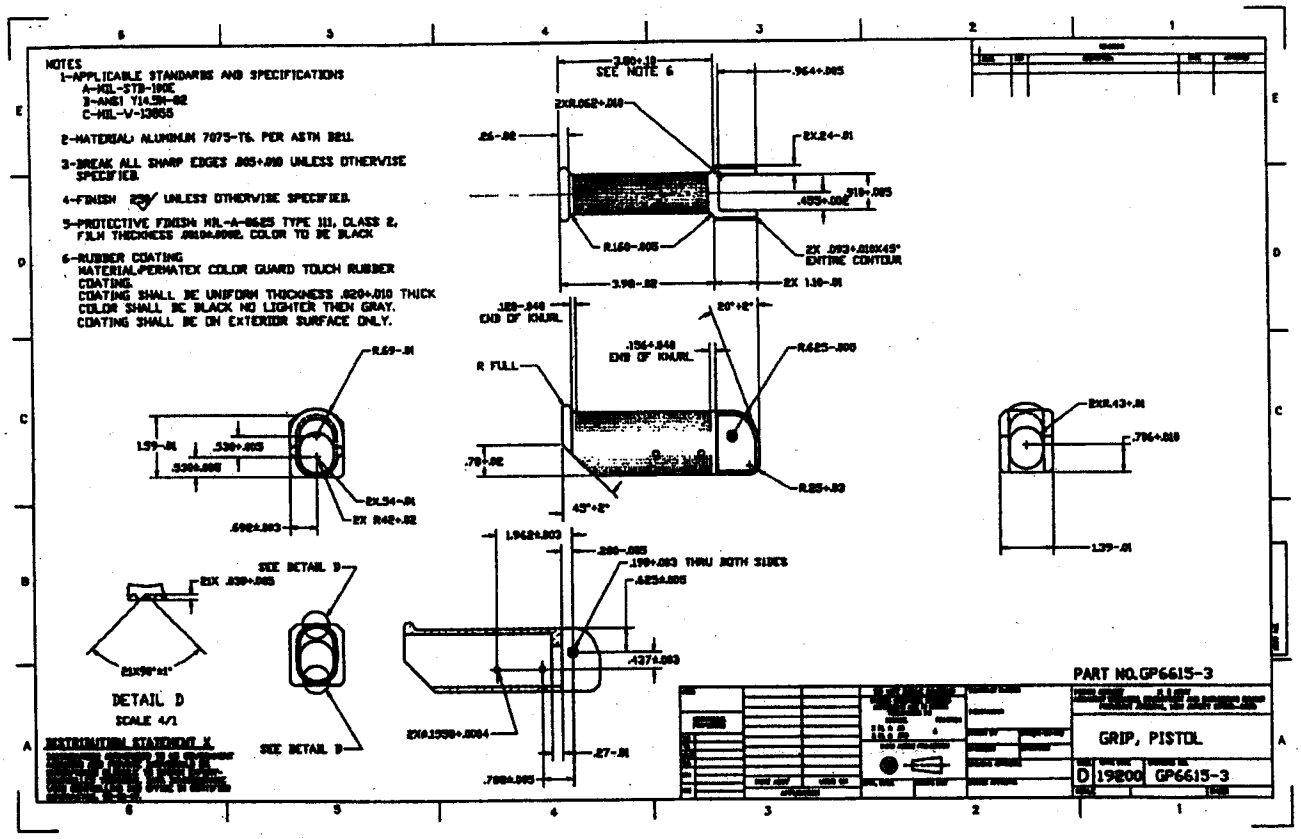

DISTRIBUTION STATEMENT X

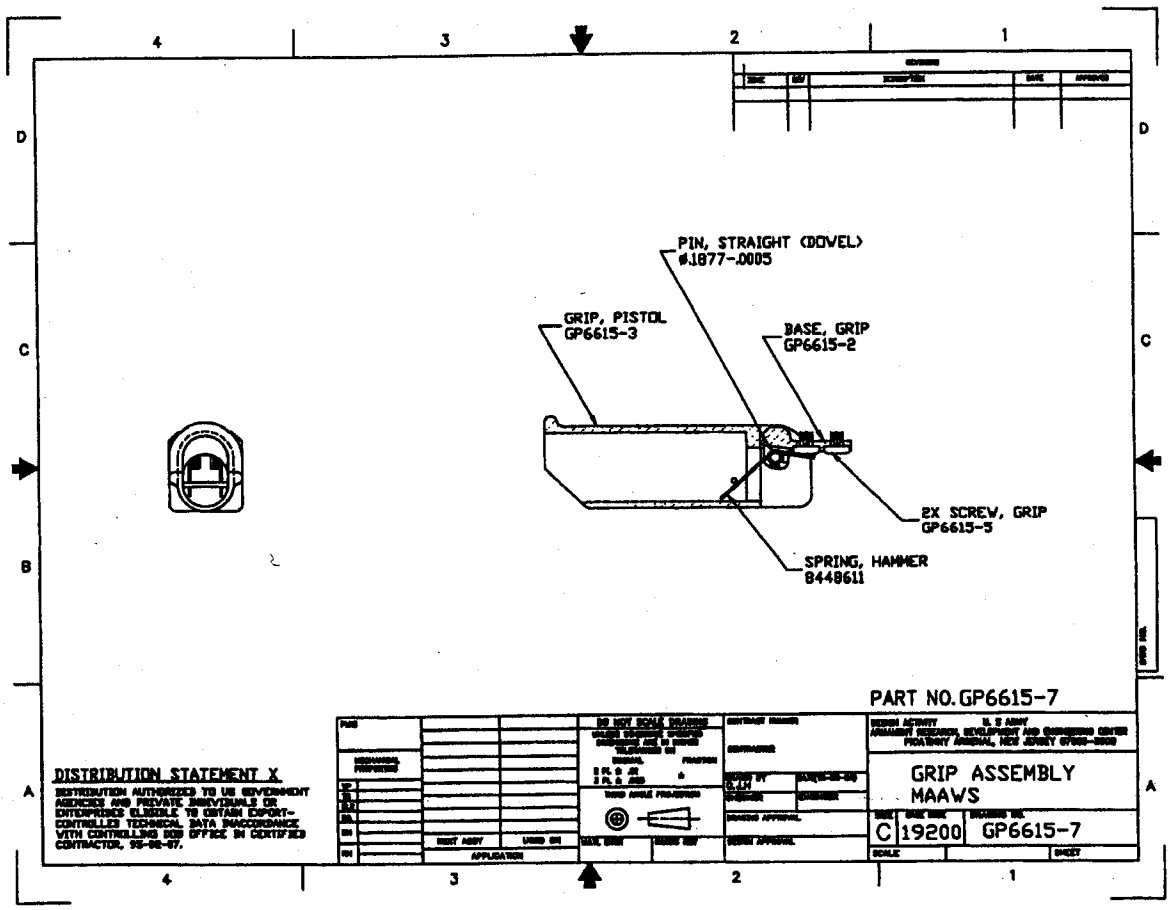
PIN, STRAIGHT (DOWEL)
Ø.1877-.0005
GRIP, PISTOL
GP6615-3
BASE, GRIP
GP6615-2
2X SCREW, GRIP
GP6615-5
SPRING, HAMMER
8448611
PART NO. GP6615-7
DISTRIBUTION STATEMENT X
DISTRIBUTION AUTHORIZED TO US GOVERNMENT AGENCIES AND PRIVATE INDIVIDUALS OR ENTERPRISES ELIGIBLE TO OBTAIN EXPORT-CONTROLLED TECHNICAL DATA INACCORDANCE WITH CONTROLLING DOD OFFICE IN CERTIFIED CONTRACTOR, 95-06-07.
GRIP ASSEMBLY
MAAWS
C
19200
GP6615-7