DRAWING SIZE D

REVISIONS				
ZONE	LTR	DESCRIPTION	DATE (YR-MO-DA)	APPROVED
	–	PRODUCT BASELINE ERR DIJ2002	91-05-02	
	A	NOR D4A2003/940331	940725	GHS
	B	NOR D4A2015 941104	950313	

NOTES:
1. SPEC MIL-F-13926 AND ANSI Y14.5-1973 APPLY.
2. MATERIAL: ALUMINUM ALLOY DIE CASTING, ALLOY NO. 413.0, SPEC QQ-A-591 OR ALUMINUM ALLOY PERMANENT MOLD CASTING 355.0, TEMPER T6, SPEC QQ-A-596.
3. SURFACES MARKED √ TO HAVE 250√ EXCEPT AS NOTED.
4. FINISH 7.2.2 (DYED BLACK) OF MIL-STD-171 ON ALL SURFACES EXCEPT SURFACES MARKED "Y".
5. IMPREGNATE IN ACCORDANCE WITH SPEC MIL-I-13857.
6. ALTERNATIVE MATERIAL: ALUMINUM ALLOY 2024-T351 SPEC QQ-A-225/6.

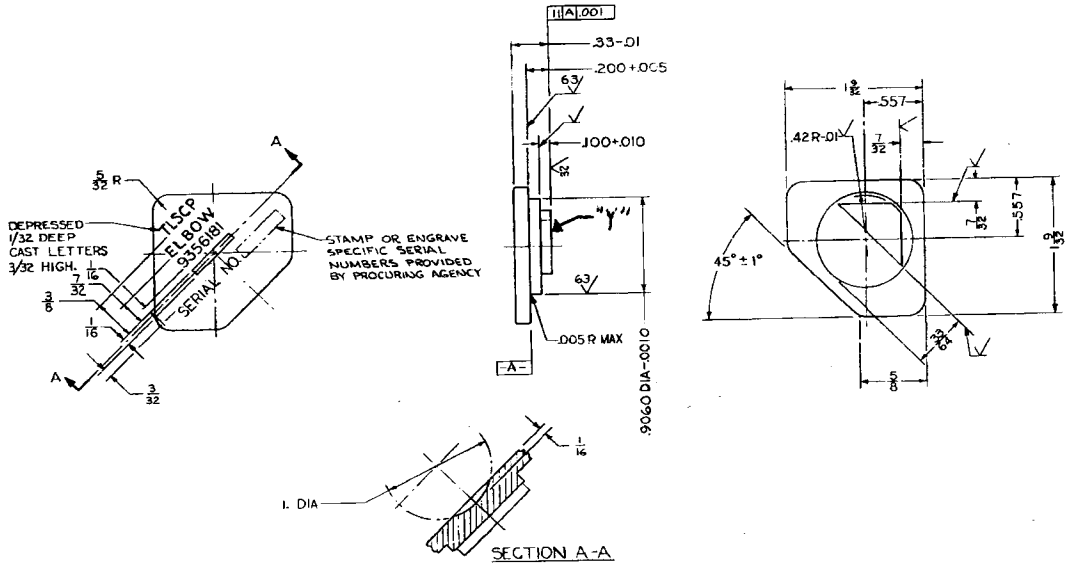

PART NO. 9356147

PMIC			DO NOT SCALE DRAWING. UNLESS OTHERWISE SPECIFIED DIMENSIONS ARE IN INCHES. TOLERANCES ON DECIMAL: 2 PL ± .—, 3 PL ± .005; FRACTION ± 1/64. THIRD ANGLE PROJECTION. MATL ENGR
MECHANICAL PROPERTIES			CONTRACT NUMBER / CONTRACTOR
YP			DRAWN BY CWM; DATE (YR-MO-DA) 91-05-02; CHECKED; ENGINEER SK
TS			DRAWING APPROVAL; DESIGN APPROVAL
EL2			
RA	9356146		
BH	NEXT ASSY	USED ON	
RH	APPLICATION		

DESIGN ACTIVITY: U.S. ARMY ARMAMENT RESEARCH, DEVELOPMENT AND ENGINEERING CENTER, PICATINNY ARSENAL, NEW JERSEY 07806-5000

HOLDER, OPTICAL ELEMENT

SIZE	CAGE CODE	
D	19200	9356147
SCALE 2/1	SHT 1 OF	SHEET

SMCAR FORM 68, 1 DEC 87(TEMP). REPLACES SMCAR FORM 68, 1 MAR 87(TEMP). WHICH MAY BE USED UNTIL EXHAUSTED