February 26, 2003 12:24

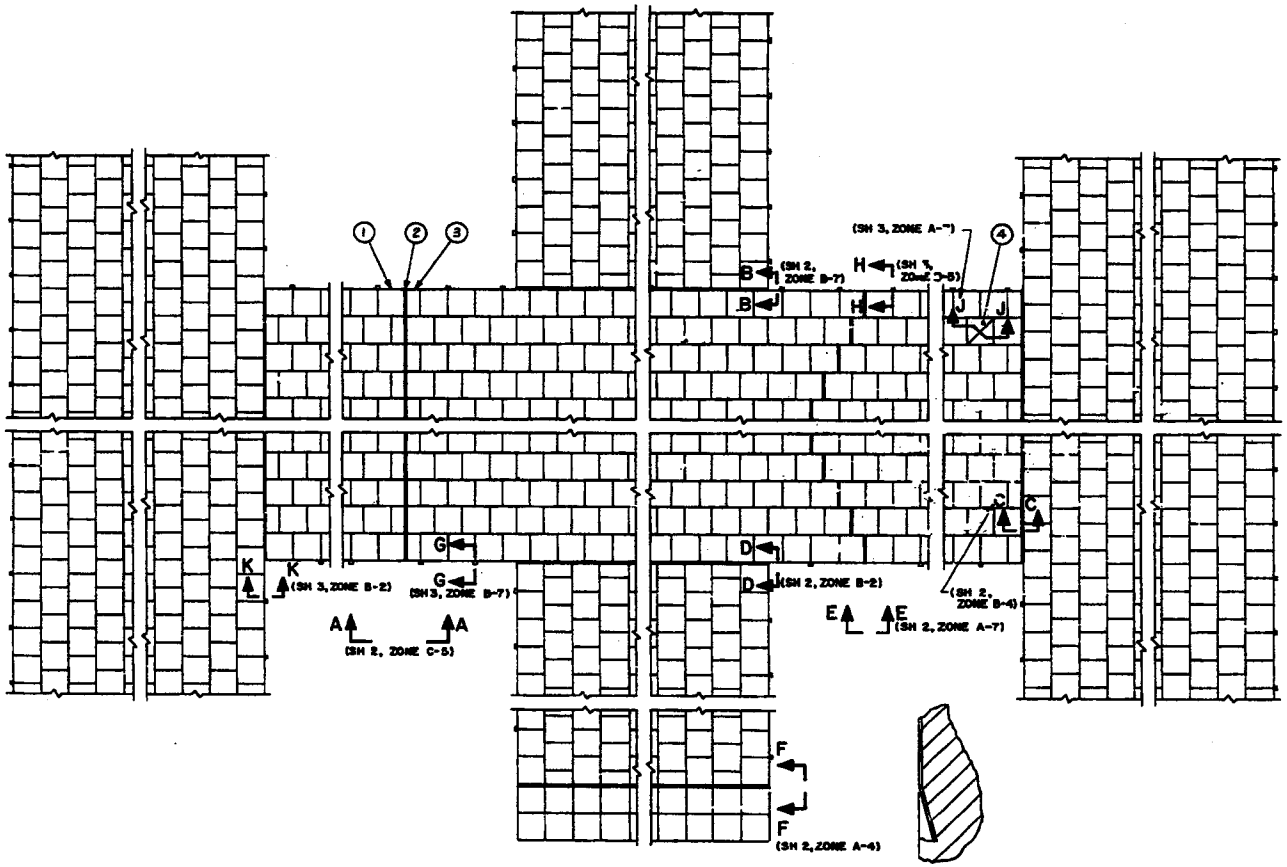

SCALE 1/100

NOTES:

1. FIND NUMBERS ARE FOR IDENTIFICATION PURPOSES ONLY. QUANTITIES TO BE SPECIFIED IN THE PROCUREMENT CONTRACT.
2. THIS ITEM SHALL CONFORM TO THE REQUIREMENTS OF MIL-M-52612

FIND NO	SYMBOL	SIZE	PART OR IDENTIFYING NO.	NOMENCLATURE OR DESCRIPTION	SPECIFICATION	MATERIAL
14		C	13216E9217	TERM ADAPTER,FEMALE/OVERLAP		
13		C	13216E9233	ANCHOR ATTACHMENT-MALE		
12		C	13216E9234	ANCHOR ATTACHMENT-FEMALE		
11		C	13216E9236	EDGE ANCHOR ASSY		
10		D	13216E9630	TERM ADAPTER,OVERLAP/UNDERLAP, 15 DEGREE TURNPOINT		
9		D	13216E9633	ACCESS.ADAPTER,OVERLAP/UNDERLAP		
8		C	13216E9210	TERM ADAPTER,FEMALE/UNDERLAP		
7		C	13216E9215	TERM ADAPTER-MALE/OVERLAP		
6		C	13216E9216	TERM ADAPTER,MALE/UNDERLAP		
5		E	13216E9630	LOCKBAR,48.000 INCH		
4		D	13216E9630	MAT ASSEMBLY,LANDING,REPAIR, MEDIUM DUTY		
3		D	13216E9629	MAT,LANDING,HALF PANEL, MEDIUM DUTY		
2		D	13216E9635	STARTING CONNECTOR,48.00 INCH		
1		D	13216E9628	MAT,LANDING,FULL PANEL, MEDIUM DUTY		

LIST OF MATERIAL

U.S. ARMY TROOP SUPPORT COMMAND
MOBILITY EQUIPMENT RESEARCH AND DEVELOPMENT CENTER
FORT BELVOIR, VIRGINIA 22060

LANDING MATS ASSEMBLY, MEDIUM DUTY

SIZE D | CODE IDENT NO. 97403 | 13220E5655

SCALE 1/1 | SHEET 1 OF 3

DATE 8 APR 74

R. E. Thick

DATE 15 MARCH 1976

February 26, 2003 12:25

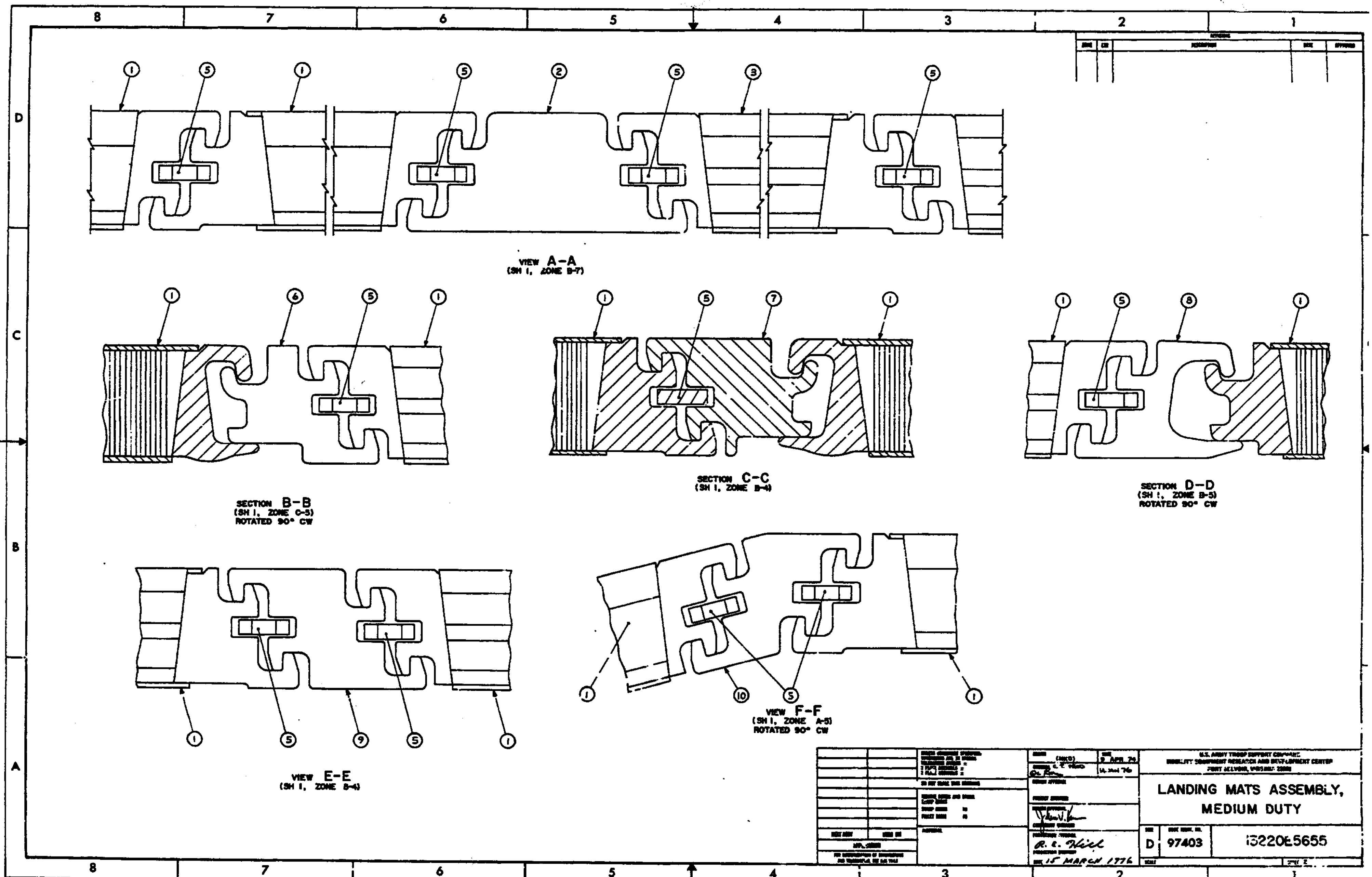

February 28, 2003 12:28

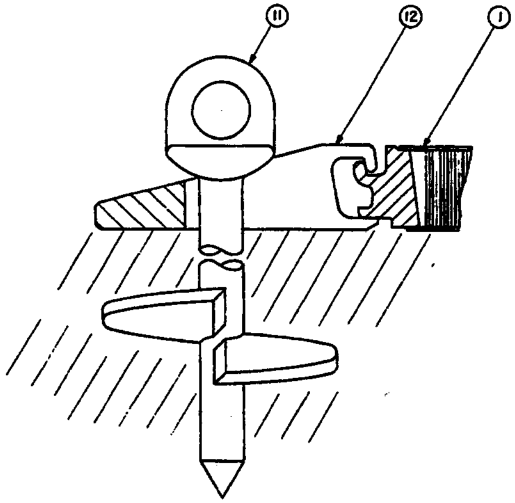

SECTION G-G
(SH 1, ZONE B-6)
ROTATED 90° CW
SCALE 1/1

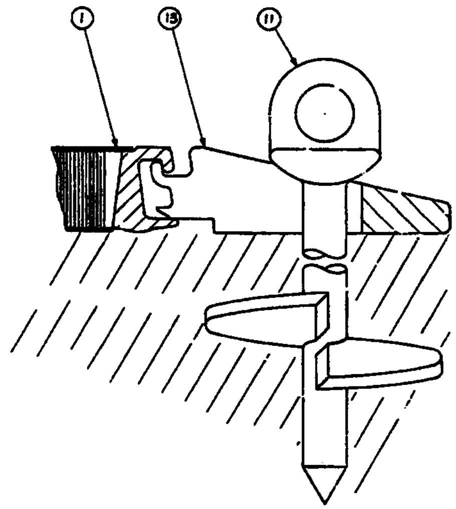

SECTION H-H
(SH 1, ZONE C-4)
ROTATED 90° CW
SCALE 1/1

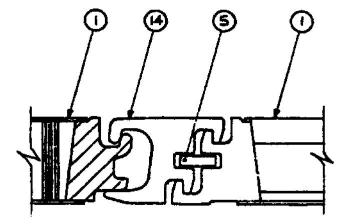

SECTION K-K
(SH 1, ZONE B-7)
SCALE 1/1

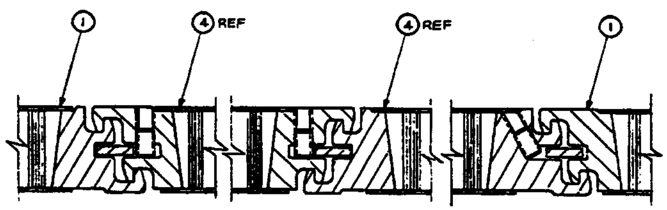

SECTION J-J
(SH 1, ZONE C-4)
SCALE 1/1

U.S. ARMY TROOP SUPPORT COMMAND
FORT BELVOIR, VIRGINIA

LANDING MATS ASSEMBLY, MEDIUM DUTY

SIZE	CODE IDENT. NO.	
D	97403	13220E5655

8 APR 74

15 MARCH 1976

REVISIONS				
ZONE	LTR	DESCRIPTION	DATE	APPROVED
	A	SEE NOR.	26 APR 68	
	B	SEE NOR.	16 JAN 75	
	C	SEE ECP NO. 87HE3366R1	12 JUN 87	

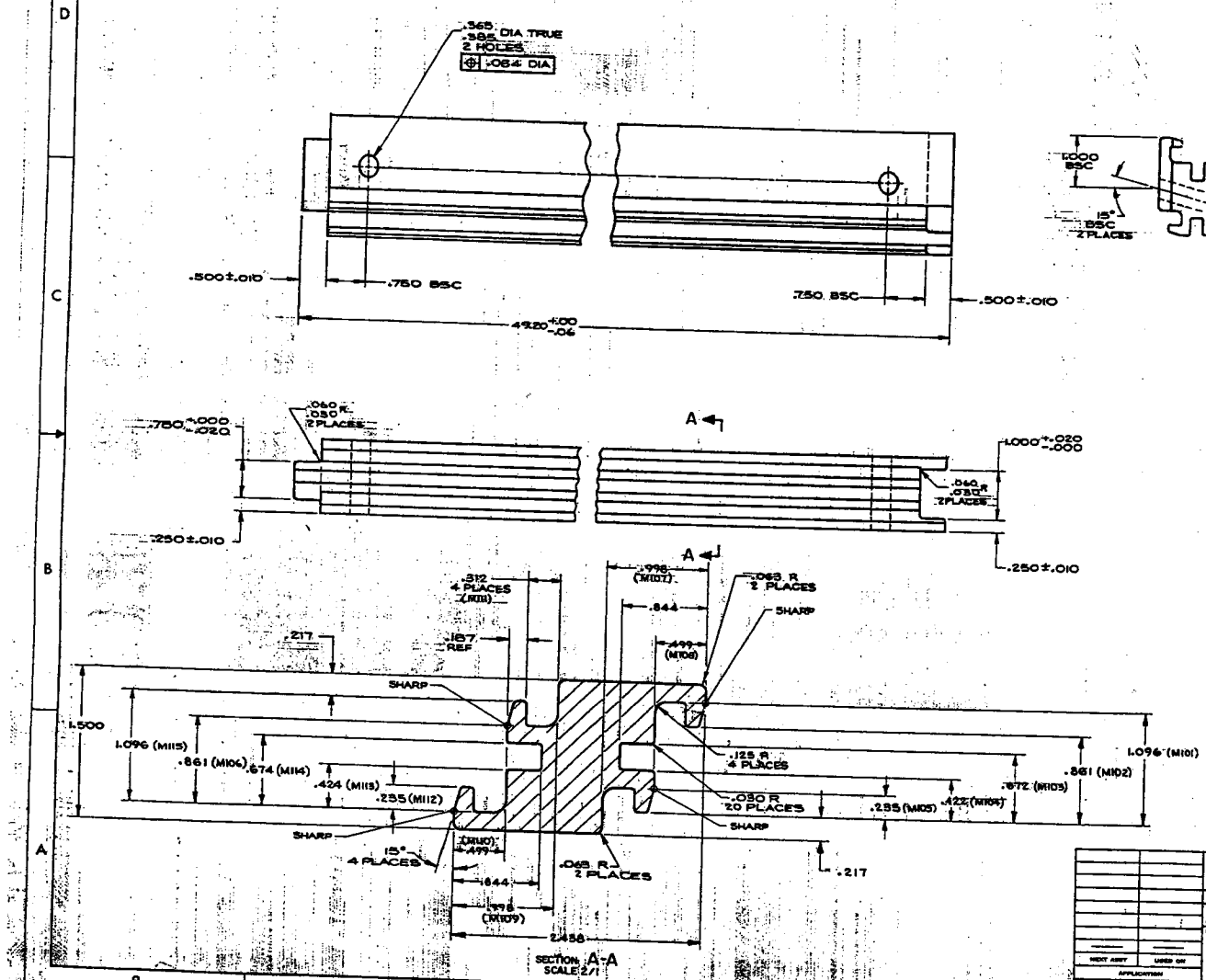

NOTES:

1. UNLESS OTHERWISE SPECIFIED, TOLERANCES ON EXTRUDED SHAPES SHALL BE IN ACCORDANCE WITH ANS B35.2.
2. FINISHING, PAINTING AND MARKING SHALL BE IN ACCORDANCE WITH END ITEM SPECIFICATION.
3. QUALITY ASSURANCE PROVISIONS:
   THESE REQUIREMENTS APPLY WHEN THIS PART IS PROCURED AS A REPAIR PART.
   A. SAMPLING FOR INSPECTION SHALL BE IN ACCORDANCE WITH MIL-STD-105.
   B. CLASSIFICATION OF CHARACTERISTICS:
      CRITICAL: NONE
      MAJOR AQL 1.0%
      M101-115

DRAWN VECO (WLT)	DATE 14 NOV 67	U.S. ARMY MOBILITY EQUIPMENT COMMAND ENGINEER RESEARCH AND DEVELOPMENT LABORATORIES, FORT BELVOIR, VA.	
CHECKED		ACCESS ADAPTER, OVERLAP/ UNDERLAP	
COMMODITY ENGINEER	8/3/67		
APPROVED FOR PRODUCTION CHIEF, PRODUCTION ENGINEERING		SIZE D / CODE IDENT NO. 97403	13216E9533
RELEASED FOR PROCUREMENT CHIEF, ENGINEERING DEPT.		SCALE 1/1	SHEET 1 OF 1
DATE 8 MAR 1968			

UNLESS OTHERWISE SPECIFIED DIMENSIONS ARE IN INCHES. TOLERANCES: ANGLES ± — 2 PLACE DECIMALS ± — 3 PLACE DECIMALS ± —

DO NOT SCALE THIS DRAWING

SHARP EDGES .010 TO .015

FILLET RADII — TO —

MATERIAL: AL ALY 6061-T6 ASTM B221

NEXT ASSY | USED ON

APPLICATION

FOR INTERPRETATION OF DRAWING, SEE ATM-4 NO 3 PLEG.

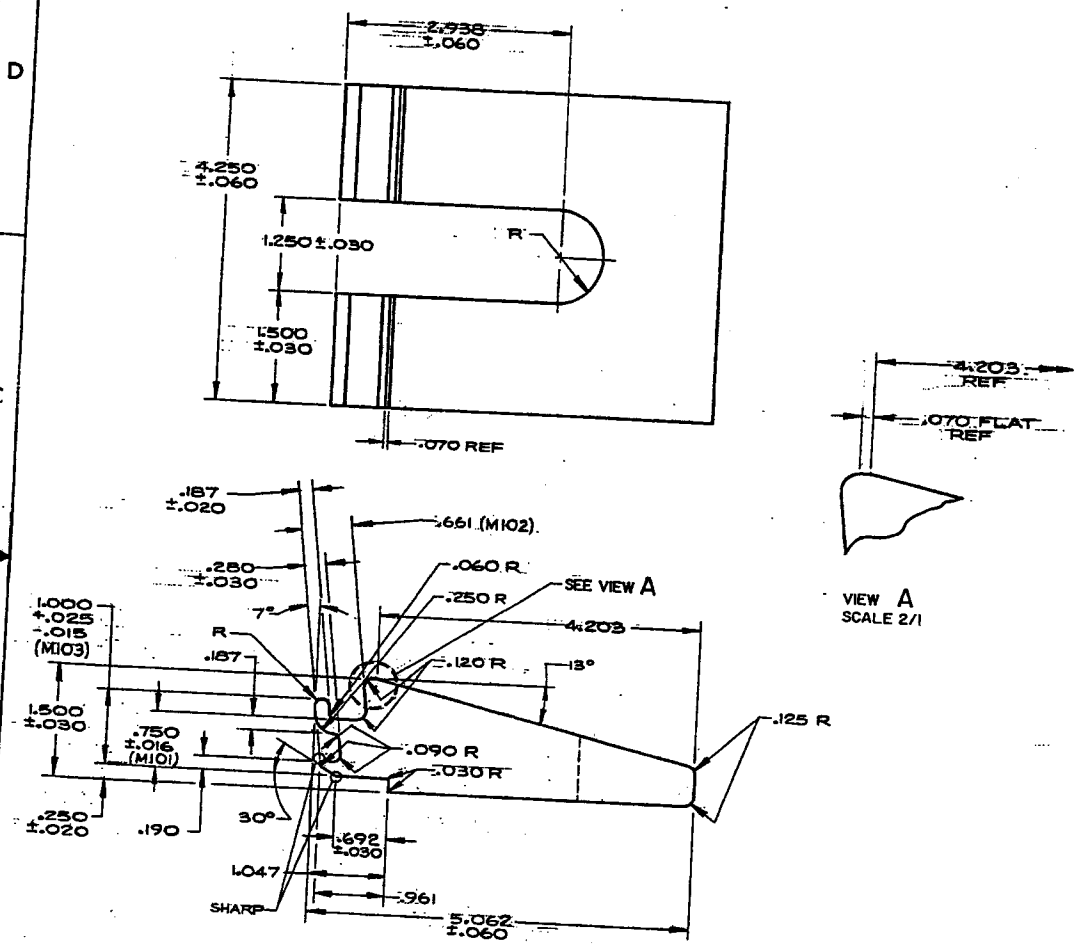

ZONE	LTR	REVISIONS DESCRIPTION	DATE	APPROVED
	A	SEE NOR.	26APR68	[illegible]
	B	SEE NOR.	18JAN75	[illegible]
	C	SEE ECP NO. 87HE3366R1	8 JUN87	[illegible]

NOTES:

1. UNLESS OTHERWISE SPECIFIED, TOLERANCES ON EXTRUDED DIMENSIONS SHALL BE IN ACCORDANCE WITH ANS H35.2.
2. MARK PARTS IN ACCORDANCE WITH END ITEM SPECIFICATION.
3. QUALITY ASSURANCE PROVISIONS:
   THESE REQUIREMENTS APPLY WHEN THIS PART IS PROCURED AS A REPAIR PART.
   A. SAMPLING FOR INSPECTION SHALL BE IN ACCORDANCE WITH MIL-STD-105.
   B. CLASSIFICATION OF CHARACTERISTICS:
      CRITICAL: NONE
      MAJOR AQL 1.0%
      M101-103
   C. GOVERNMENT INSPECTION EQUIPMENT DESIGN EXISTS FOR CHARACTERISTICS M101 THROUGH 103.

NEXT ASSY	USED ON
APPLICATION	
FOR INTERPRETATION OF DRAWING 0.00-STD-100 APPLIES	

UNLESS OTHERWISE SPECIFIED: DIMENSIONS ARE IN INCHES
TOLERANCES: ANGLES ± ___
3 PLACE DECIMALS ± ___
2 PLACE DECIMALS ± ___

DO NOT SCALE THIS DRAWING

SHARP EDGES .010 TO .015

FILLET RADII ___ TO ___

MATERIAL

AL ALY
6061-T6
ASTM B221

DRAWN VECO (JET) DATE 13 NOV 67

CHECKED PROD RR 19 FEB 68

DESIGN APPROVAL J. T. Peck 8/3/68
COMMODITY ENGINEER

APPROVED FOR PRODUCTION Earl R. Stegman
CHIEF, PRODUCTION ENGINEERING

RELEASED FOR PROCUREMENT [illegible]
CHIEF, ENGINEERING DEPT.

DATE 8 MAR 1968

U.S. ARMY MOBILITY EQUIPMENT COMMAND
ENGINEER RESEARCH AND DEVELOPMENT LABORATORIES, FORT BELVOIR, VA.

ANCHOR ATTACHMENT-MALE

SIZE	CODE IDENT NO.	
C	97403	13216E9233

SCALE 1/1 SHEET 1 OF 1

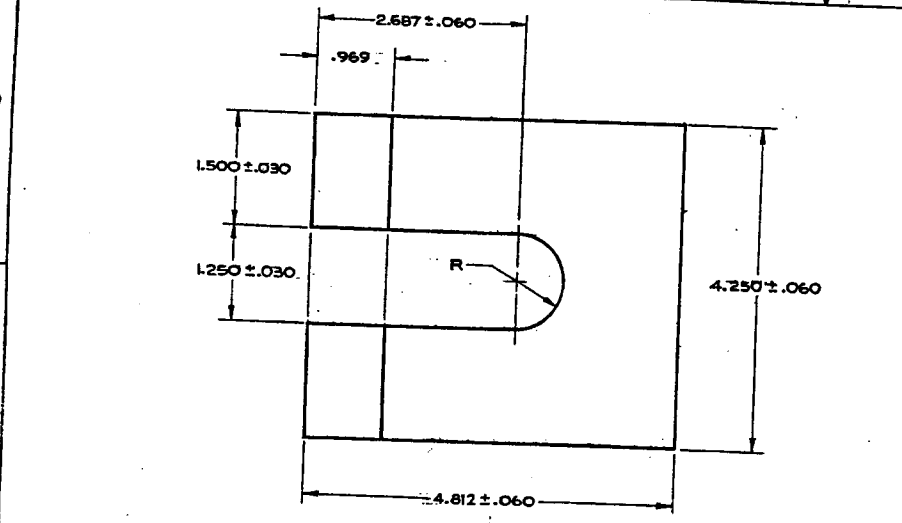

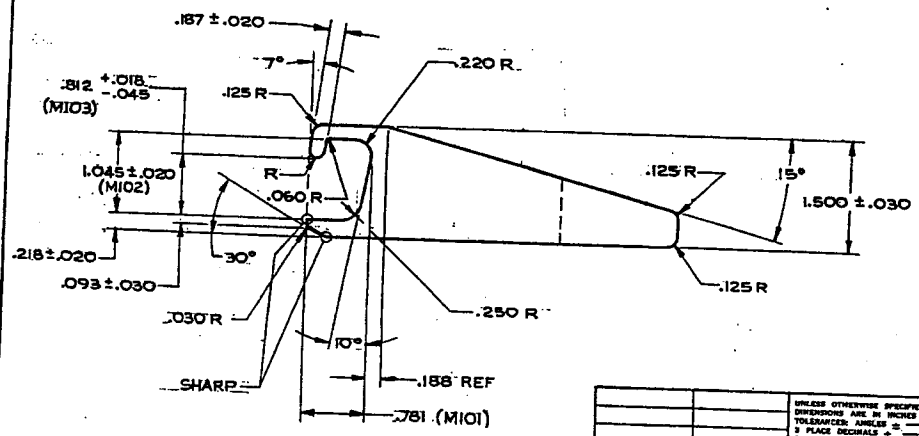

REVISIONS				
ZONE	LTR	DESCRIPTION	DATE	APPROVED
	A	SEE NOR.	26 APR 68	
	B	SEE NOR.	18 JAN 76	
	C	SEE ECP NO. 86HE3759	7 NOV 86	MHV
	D	SEE ECP NO. 87HE3366R1	8 JUN 87	

NOTES:

1. UNLESS OTHERWISE SPECIFIED, ALL TOLERANCES ON EXTRUDED DIMENSIONS SHALL BE IN ACCORDANCE WITH ANS H35.2.
2. MARK PART IN ACCORDANCE WITH END ITEM SPECIFICATION
3. QUALITY ASSURANCE PROVISIONS:
   THESE REQUIREMENTS APPLY WHEN THIS PART IS PROCURED AS A REPAIR PART.
   A. SAMPLING FOR INSPECTION SHALL BE IN ACCORDANCE WITH MIL-STD-105.
   B. CLASSIFICATION OF CHARACTERISTICS:
      CRITICAL: NONE
      MAJOR AQL 1.0%
      M101-103
   C. GOVERNMENT INSPECTION EQUIPMENT DESIGN EXISTS FOR CHARACTERISTICS M101 THROUGH 103.

NEXT ASSY	USED ON
APPLICATION	
FOR INTERPRETATION OF DRAWING, DOD-STD-100 APPLIES	

UNLESS OTHERWISE SPECIFIED: DIMENSIONS ARE IN INCHES
TOLERANCES: ANGLES ± —
3 PLACE DECIMALS ± —
2 PLACE DECIMALS ± —

DO NOT SCALE THIS DRAWING

SHARP EDGES .010 TO .015

FILLET RADII — TO —

MATERIAL: AL ALY 6061—T6 ASTM B221

DRAWN VECO (DKB) DATE 3 JAN 68
CHECKED 19 FEB 68
DESIGN APPROVAL 8/3/68
COMMODITY ENGINEER
APPROVED FOR PRODUCTION
CHIEF, PRODUCTION ENGINEERING
RELEASED FOR PROCUREMENT
CHIEF, ENGINEERING DEPT.
DATE 8 MAR 1968

U.S. ARMY MOBILITY EQUIPMENT COMMAND
ENGINEER RESEARCH AND DEVELOPMENT LABORATORIES, FORT BELVOIR, VA.

ANCHOR ATTACHMENT-FEMALE

SIZE	CODE IDENT NO.	
C	97403	13216E9234

SCALE 1/1 SHEET 1 OF 1

MS-357-2

REVISIONS				
ZONE	LTR	DESCRIPTION	DATE	APPROVED
	A	SEE NOR.	26APR68	[illegible]
	B	SEE ECP NO. 86HE3759	7NOV86	MHV
	C	SEE ECP NO. 87HE3366R1	8JUN87	[illegible]

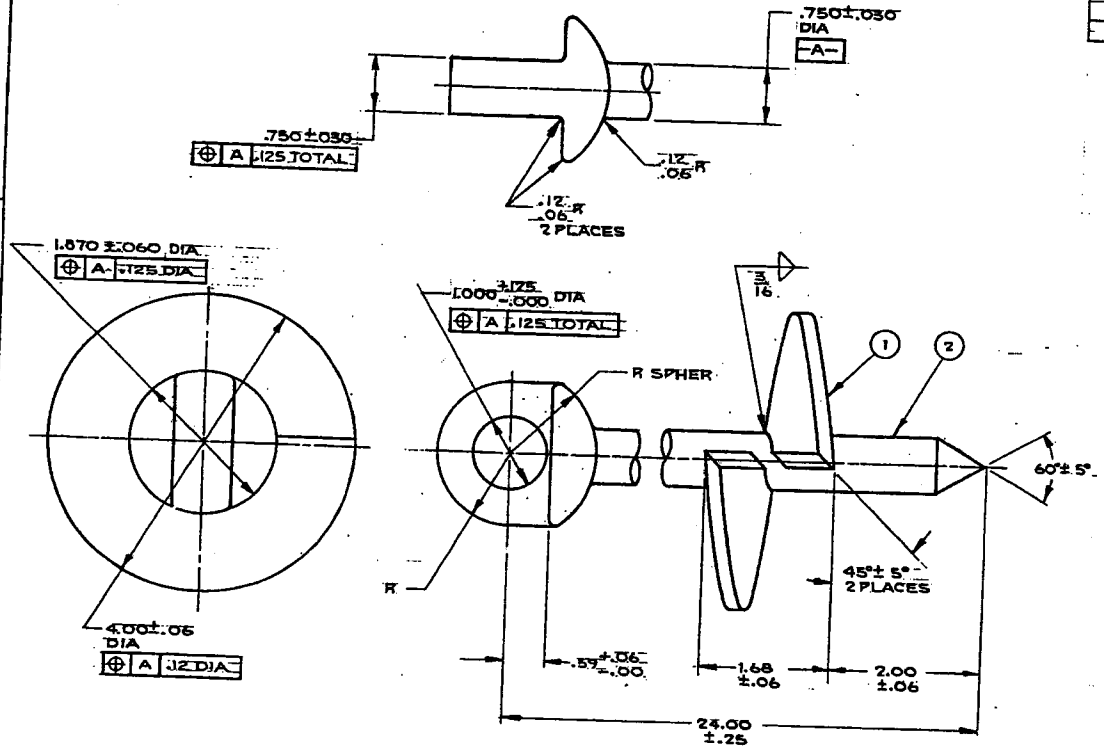

NOTES:

1. HOT GALVANIZE PART IN ACCORDANCE WITH ASTM A153.
2. WELDMENT REQUIREMENTS TO BE IN ACCORDANCE WITH D13214E9223, CLASS 1, TYPE 3.
3. MARK PART IN ACCORDANCE WITH END ITEM SPECIFICATION.
4. FOR INTERPRETATION OF: WELDING SYMBOLS, SEE ANS/AWS A2.4.

FIND NO.	SYM	CODE IDENT	DWG SIZE	PART OR IDENTIFYING NO.	QTY REQD	NOMENCLATURE OR DESCRIPTION	SPECIFICATION	MATERIAL
2					1	ROD	AISI 1045	STL
1					1	PLATE, .188 STK	AISI 1020	STL

LIST OF MATERIAL

S-SOURCE CONTROL DWG
C-SPEC CONTROL DWG
M-MULTIPLE USE DWG

NEXT ASSY	USED ON
APPLICATION	

FOR INTERPRETATION OF DRAWING, AR-STD-100 APPLIES

UNLESS OTHERWISE SPECIFIED: DIMENSIONS ARE IN INCHES
TOLERANCES: ANGLES ± ——
3 PLACE DECIMALS ± ——
2 PLACE DECIMALS ± ——

DO NOT SCALE THIS DRAWING

SHARP EDGES .015 TO .030

FILLET RADII —— TO ——

MATERIAL

DRAWN VECO (DJS) DATE 22 DEC 67
CHECKED VECO. RP 19FEB 68
DESIGN APPROVAL J.J. Hulins 8/3/68
COMMODITY ENGINEER
APPROVED FOR PRODUCTION Earl R. Stephens
CHIEF, PRODUCTION ENGINEERING
RELEASED FOR PROCUREMENT
CHIEF, ENGINEERING DEPT.
DATE 8 MAR 1968

U.S. ARMY MOBILITY EQUIPMENT COMMAND
ENGINEER RESEARCH AND DEVELOPMENT LABORATORIES, FORT BELVOIR, VA.

EDGE ANCHOR ASSEMBLY

SIZE	CODE IDENT NO.	
C	97403	13216E9236

SCALE 1/1 SHEET 1 OF 1

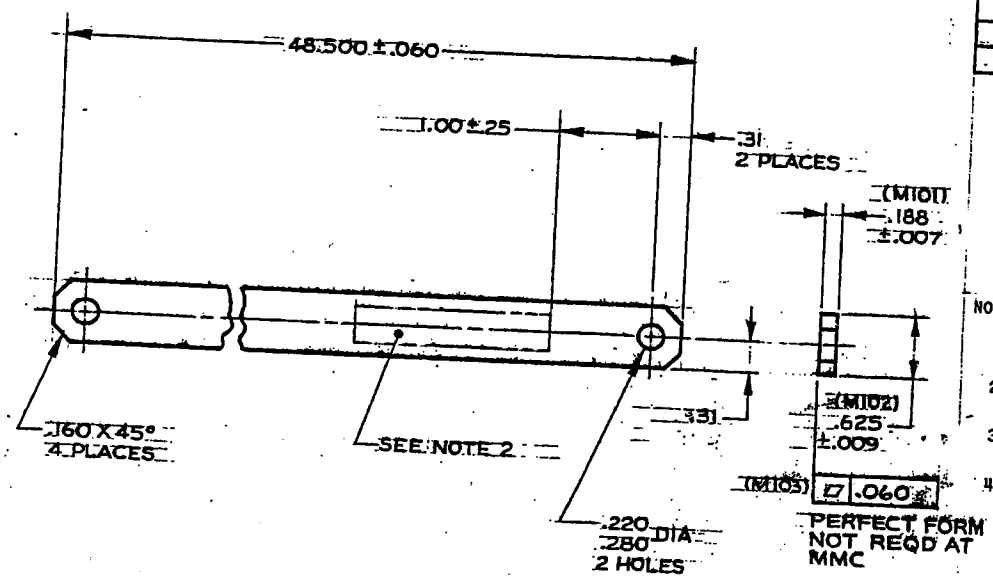

REVISIONS				
ZONE	LTR	DESCRIPTION	DATE	APPROVED
	A	SEE NOR.	26APR68	
	B	SEE NOR.	18JAN75	
	C	SEE ECP NO. 87HE3366R1	8JUN87	MCW

NOTES:

1. FINISH IN ACCORDANCE WITH MIL-A-8625, TYPE I OR II, CLASS I.
2. MARK PART IN ACCORDANCE WITH END ITEM SPECIFICATION.
3. MATERIAL: AL ALY 6061-T6, ASTM B221, ASTM B209 OR AL ALY 2024-T4, ASTM B221.
4. QUALITY ASSURANCE PROVISIONS: THESE REQUIREMENTS APPLY WHEN THIS PART IS PROCURED AS A REPAIR PART.
   A. SAMPLING FOR INSPECTION SHALL BE IN ACCORDANCE WITH MIL-STD-105.
   B. CLASSIFICATION OF CHARACTERISTICS:
      CRITICAL: NONE
      MAJOR AQL 1.0%
      M101-103

NEXT ASSY	USED ON
APPLICATION	
FOR INTERPRETATION OF DRAWING, DOD-STD-100 APPLIES	

UNLESS OTHERWISE SPECIFIED: DIMENSIONS ARE IN INCHES TOLERANCES: ANGLES ±5° 3 PLACE DECIMALS ±.015 2 PLACE DECIMALS ±.06

DO NOT SCALE THIS DRAWING

FILLET RADII — TO — SHARP EDGES .02 TO .03

MATERIAL: SEE NOTE 3

DRAWN VECO (SAF) DATE 6 JAN 68

CHECKED 7MAR68

DESIGN APPROVAL

COMMODITY ENGINEER 8/2/68

APPROVED FOR PRODUCTION Earl R. Stepman CHIEF, PRODUCTION ENGINEER

RELEASED FOR PROCUREMENT CHIEF, ENGINEERING DEPT.

U.S. ARMY MOBILITY EQUIPMENT COMMAND
ENGINEER RESEARCH AND DEVELOPMENT LABORATORIES, FORT BELVOIR, VA.

LOCKBAR, 48.500 INCH

SIZE	CODE IDENT NO.	
B	97403	13216E9536
DATE 8 MAR 1968	SCALE 1/1	SHEET 1 OF 1

REVISIONS				
ZONE	LTR	DESCRIPTION	DATE	APPROVED
	A	SEE N.O.R.	26APR68	
	B	SEE ECP NO. 87HE3366R1	8 JUN 87	

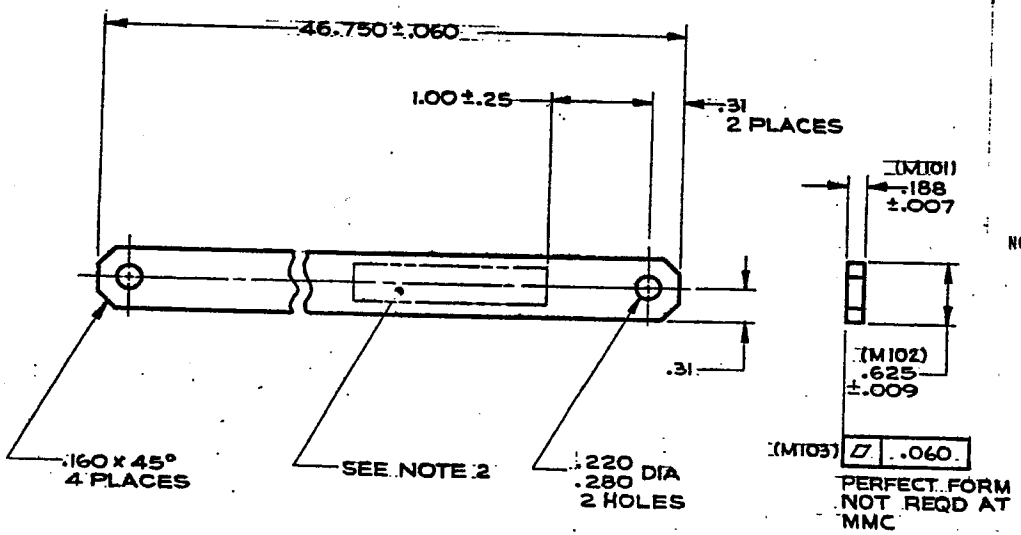

NOTES:

1. FINISH IN ACCORDANCE WITH MIL-A-8625, TYPE I OR II, CLASS 1.
2. MARK PART IN ACCORDANCE WITH END ITEM SPECIFICATION.
3. MATERIAL: AL ALY 6061-T6 QQ-A-200/8, QQ-A-250/11 OR AL ALY 2024-T4 QQ-A-225/6.
4. QUALITY ASSURANCE PROVISIONS: THESE REQUIREMENTS APPLY WHEN THIS PART IS PROCURED AS A REPAIR PART.
   A. SAMPLING FOR INSPECTION SHALL BE IN ACCORDANCE WITH MIL-STD-105.
   B. CLASSIFICATION OF CHARACTERISTICS:
      CRITICAL: NONE
      MAJOR AQL 1.0%
      M101-103

D13216E9530	13216E9530
NEXT ASSY	USED ON
APPLICATION	
FOR INTERPRETATION OF DRAWING, DOD-STD-100 APPLIES	

UNLESS OTHERWISE SPECIFIED: DIMENSIONS ARE IN INCHES
TOLERANCES: ANGLES ± 5°
3 PLACE DECIMALS ± .015
2 PLACE DECIMALS ± .06
DO NOT SCALE THIS DRAWING
FILLET RADII — TO —
SHARP EDGES .02 TO .03
MATERIAL: SEE NOTE 3

DRAWN VECO (DKB)	DATE 3 JAN 68
CHECKED	7MAR68
DESIGN APPROVAL	8/3/68
COMMODITY ENGINEER	
APPROVED FOR PRODUCTION	
CHIEF PRODUCTION ENGINEER	
RELEASED FOR PROCUREMENT	
CHIEF, ENGINEERING DEPT.	

U.S. ARMY MOBILITY EQUIPMENT COMMAND
ENGINEER RESEARCH AND DEVELOPMENT
LABORATORIES, FORT BELVOIR, VA.

LOCKBAR, 46.750 INCH

SIZE	CODE IDENT NO.	
B	97403	13216E9537
DATE 8 MAR 1968	SCALE 1/1	SHEET 1 OF 1

REVISIONS				
ZONE	LTR	DESCRIPTION	DATE	APPROVED
	A	SEE NOR.	26APR68	
	B	SEE ECP NO. 87HE3366R1	8 JUN 87	

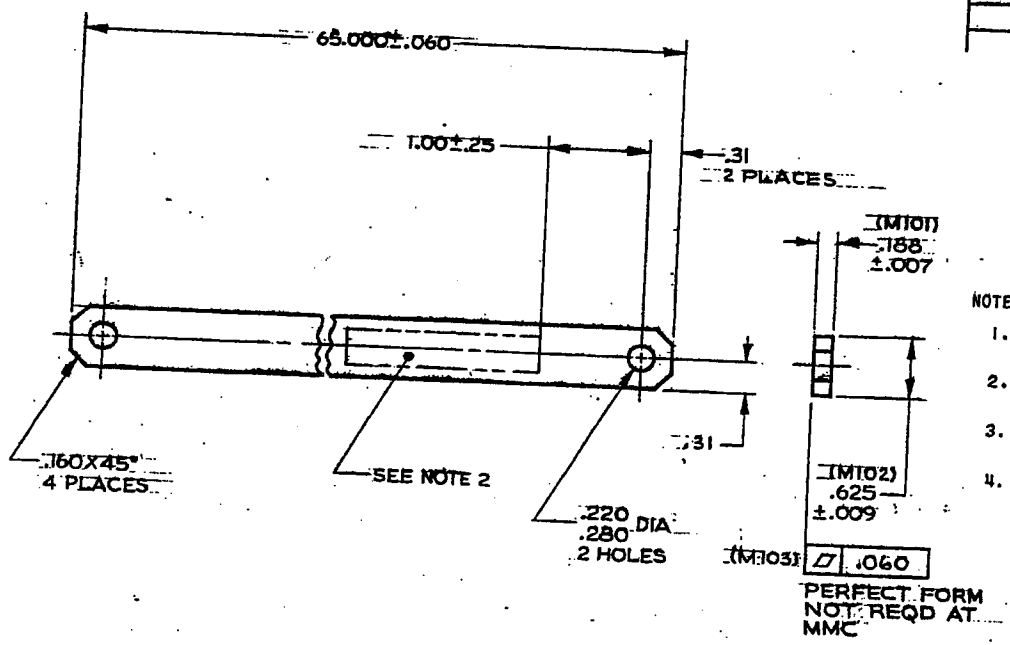

NOTES:

1. FINISH IN ACCORDANCE WITH MIL-A-8625, TYPE I OR II, CLASS I.
2. MARK PART IN ACCORDANCE WITH END ITEM SPECIFICATION.
3. MATERIAL: AL ALY 6061-T6 QQ-A-200/8, QQ-A-250/11 OR AL ALY 2024-T4 QQ-A-225/6.
4. QUALITY ASSURANCE PROVISIONS: THESE REQUIREMENTS APPLY WHEN THIS PART IS PROCURED AS A REPAIR PART.
   A. SAMPLING FOR INSPECTION SHALL BE IN ACCORDANCE WITH MIL-STD-105.
   B. CLASSIFICATION OF CHARACTERISTICS:
      CRITICAL: NONE
      MAJOR AQL 1.0%
      M101-103

D13216E9530	13216E9530
NEXT ASSY	USED ON
APPLICATION	

UNLESS OTHERWISE SPECIFIED: DIMENSIONS ARE IN INCHES TOLERANCES: ANGLES ± 5° 3 PLACE DECIMALS ±.015 2 PLACE DECIMALS ±.06

DO NOT SCALE THIS DRAWING

FILLET RADII — TO — SHARP EDGES .02 TO .03

MATERIAL: SEE NOTE 3

DRAWN VECO (SAF) DATE 6 JAN 68

CHECKED 7 MAR 68

DESIGN APPROVAL

COMMODITY ENGINEER

APPROVED FOR PRODUCTION

CHIEF PRODUCTION ENGINEER

RELEASED FOR PROCUREMENT

CHIEF, ENGINEERING DEPT.

U.S. ARMY MOBILITY EQUIPMENT COMMAND
ENGINEER RESEARCH AND DEVELOPMENT LABORATORIES, FORT BELVOIR, VA.

LOCKBAR, 65.000 INCH

SIZE	CODE IDENT NO.	
B	97403	13216E9534

DATE 8 MAR 1968 SCALE 1/1 SHEET 1 OF 1

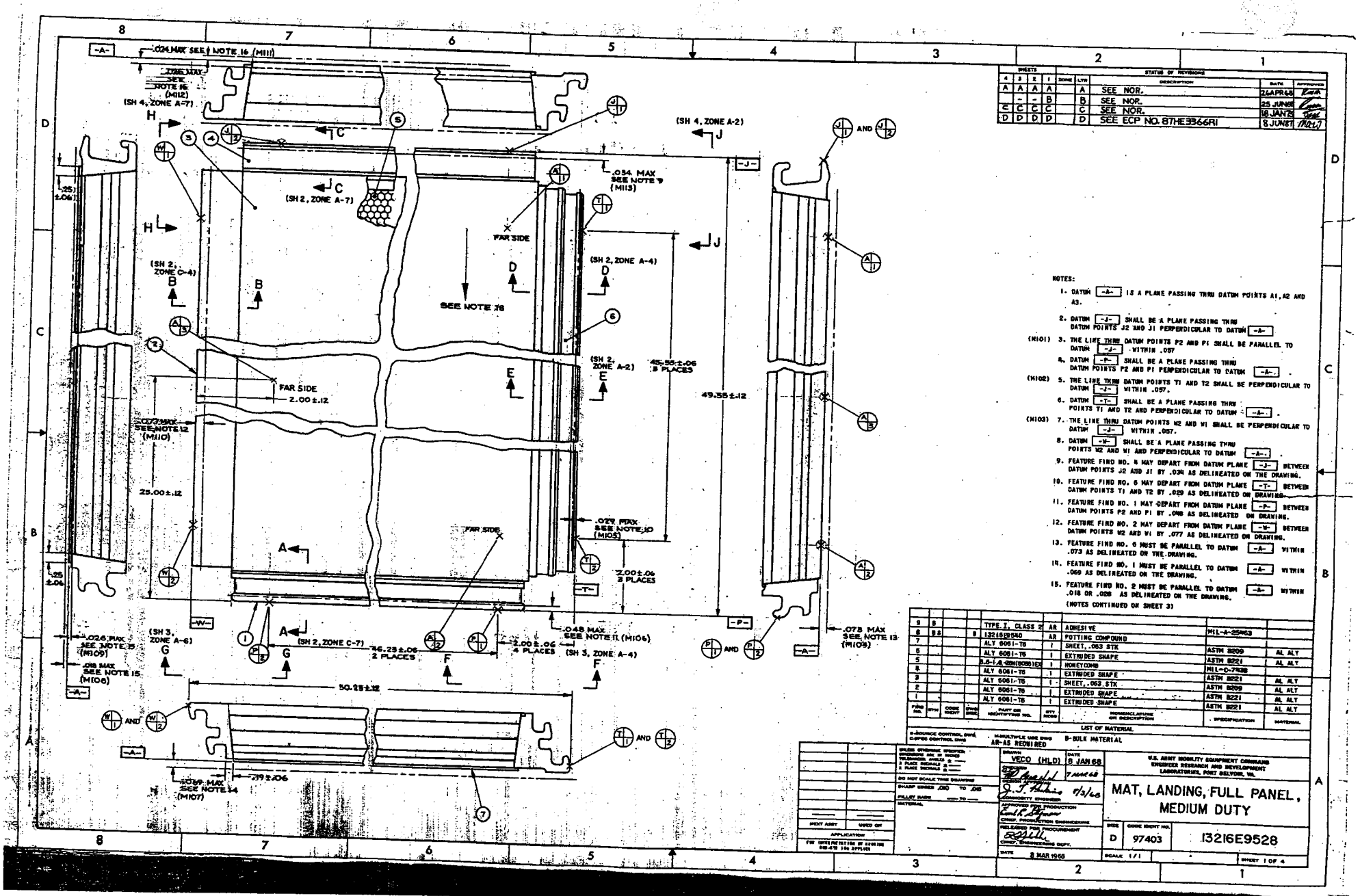

SHEETS 4	3	2	1	ZONE	LTR	DESCRIPTION	DATE	APPROVED
A	A	A	A		A	SEE NOR.	26APR68	
	-	-	B		B	SEE NOR.	25 JUN68	
C	C	C	C		C	SEE NOR.	16 JAN75	
D	D	D	D		D	SEE ECP NO. 87HE3366R1	8 JUN87	

STATUS OF REVISIONS

NOTES:

1. DATUM -A- IS A PLANE PASSING THRU DATUM POINTS A1, A2 AND A3.
2. DATUM -J- SHALL BE A PLANE PASSING THRU DATUM POINTS J2 AND J1 PERPENDICULAR TO DATUM -A-
(M101) 3. THE LINE THRU DATUM POINTS P2 AND P1 SHALL BE PARALLEL TO DATUM -J- WITHIN .057
4. DATUM -P- SHALL BE A PLANE PASSING THRU DATUM POINTS P2 AND P1 PERPENDICULAR TO DATUM -A-.
(M102) 5. THE LINE THRU DATUM POINTS T1 AND T2 SHALL BE PERPENDICULAR TO DATUM -J- WITHIN .057.
6. DATUM -T- SHALL BE A PLANE PASSING THRU POINTS T1 AND T2 AND PERPENDICULAR TO DATUM -A-.
(M103) 7. THE LINE THRU DATUM POINTS W2 AND W1 SHALL BE PERPENDICULAR TO DATUM -J- WITHIN .057.
8. DATUM -W- SHALL BE A PLANE PASSING THRU POINTS W2 AND W1 AND PERPENDICULAR TO DATUM -A-.
9. FEATURE FIND NO. 4 MAY DEPART FROM DATUM PLANE -J- BETWEEN DATUM POINTS J2 AND J1 BY .034 AS DELINEATED ON THE DRAWING.
10. FEATURE FIND NO. 6 MAY DEPART FROM DATUM PLANE -T- BETWEEN DATUM POINTS T1 AND T2 BY .029 AS DELINEATED ON DRAWING.
11. FEATURE FIND NO. 1 MAY DEPART FROM DATUM PLANE -P- BETWEEN DATUM POINTS P2 AND P1 BY .048 AS DELINEATED ON DRAWING.
12. FEATURE FIND NO. 2 MAY DEPART FROM DATUM PLANE -W- BETWEEN DATUM POINTS W2 AND W1 BY .077 AS DELINEATED ON DRAWING.
13. FEATURE FIND NO. 6 MUST BE PARALLEL TO DATUM -A- WITHIN .073 AS DELINEATED ON THE DRAWING.
14. FEATURE FIND NO. 1 MUST BE PARALLEL TO DATUM -A- WITHIN .069 AS DELINEATED ON THE DRAWING.
15. FEATURE FIND NO. 2 MUST BE PARALLEL TO DATUM -A- WITHIN .018 OR .028 AS DELINEATED ON THE DRAWING.

(NOTES CONTINUED ON SHEET 3)

FIND NO.	QTY	CODE IDENT	DWG SIZE	PART OR IDENTIFYING NO.	QTY REQD	NOMENCLATURE OR DESCRIPTION	SPECIFICATION	MATERIAL
9	B							
8	B.S		B	13216E9540	AR	ADHESIVE	MIL-A-25463	
7					AR	POTTING COMPOUND		
6				ALY 6061-T6	1	SHEET, .063 STK	ASTM B209	AL ALY
5				ALY 6061-T6	1	EXTRUDED SHAPE	ASTM B221	AL ALY
4				5.5-1/8.4EN(5056)HX	1	HONEYCOMB	MIL-C-7438	
3				ALY 6061-T6	1	EXTRUDED SHAPE	ASTM B221	AL ALY
2				ALY 6061-T6	1	SHEET, .063 STK	ASTM B209	AL ALY
1				ALY 6061-T6	1	EXTRUDED SHAPE	ASTM B221	AL ALY
				ALY 6061-T6	1	EXTRUDED SHAPE	ASTM B221	AL ALY

LIST OF MATERIAL

S-SOURCE CONTROL DWG, C-SPEC CONTROL DWG — M-MULTIPLE USE DWG — AR-AS REQUIRED — B-BULK MATERIAL

UNLESS OTHERWISE SPECIFIED DIMENSIONS ARE IN INCHES TOLERANCES: FRACTS ± — 2 PLACE DECIMALS ± — 3 PLACE DECIMALS ± —

DO NOT SCALE THIS DRAWING

SHARP EDGES .010 TO .015

FILLET RADII —— TO —

MATERIAL

NEXT ASSY | USED ON

APPLICATION

FOR INFORMATION OF DESIGN ONLY-NOT APPLICABLE

DRAWN VECO (HLD) DATE 8 JAN 68

DESIGN ENGINEER T. McCE

COMMODITY ENGINEER J.J. Shehis 4/3/68

APPROVED FOR PRODUCTION Carl F. Bryson

CHIEF, PRODUCTION ENGINEERING

RELEASED FOR PROCUREMENT

CHIEF, ENGINEERING DEPT.

DATE 8 MAR 1968

U.S. ARMY MOBILITY EQUIPMENT COMMAND
ENGINEER RESEARCH AND DEVELOPMENT LABORATORIES, FORT BELVOIR, VA.

MAT, LANDING, FULL PANEL, MEDIUM DUTY

SIZE D | CODE IDENT NO. 97403 | 13216E9528

SCALE 1/1 | SHEET 1 OF 4

13216E9528_97403__0_0000_0001_U_N_
February 21, 2003 1:34 PM

REVISIONS				
ZONE	LTR	DESCRIPTION	DATE	APPROVED
	A	SEE NOR.	24 APR 68	
	C	SEE NOR.	18 JAN 73	
	D	SEE ECP NO. 87HE3366 R1	2 JUN 87	

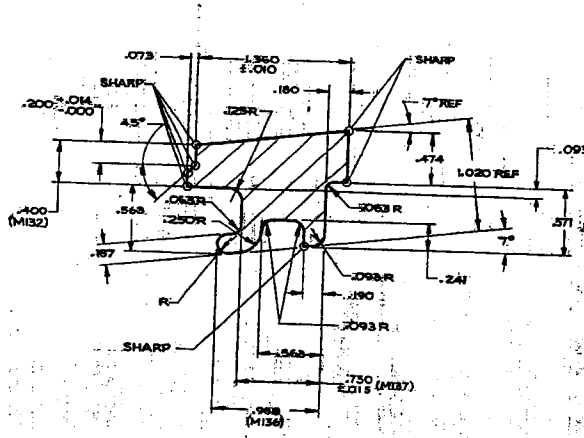

SECTION A-A
FIND NUMBERS NOT SHOWN
OMITTED FOR CLARITY
(SH 1, ZONE B-7)
SCALE 2/1

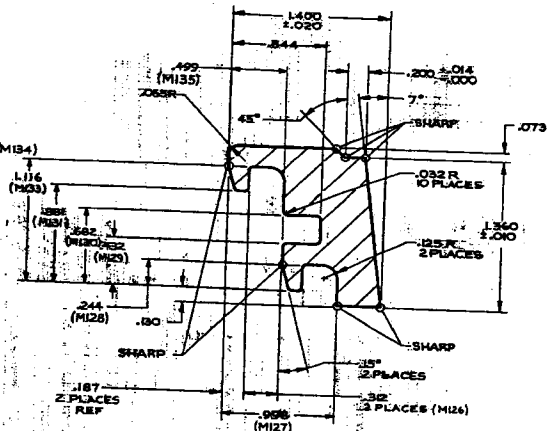

SECTION B-B
FIND NUMBERS NOT SHOWN
OMITTED FOR CLARITY
(SH 1, ZONE C-7)
SCALE 2/1

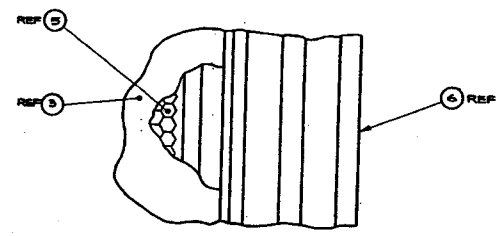

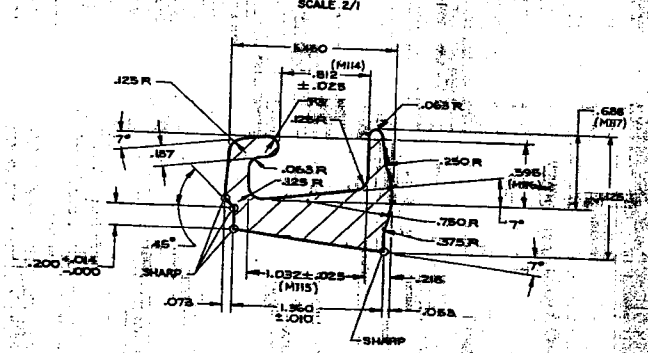

SECTION C-C
FIND NUMBERS NOT SHOWN
OMITTED FOR CLARITY
(SH 1, ZONE D-7)
SCALE 2/1

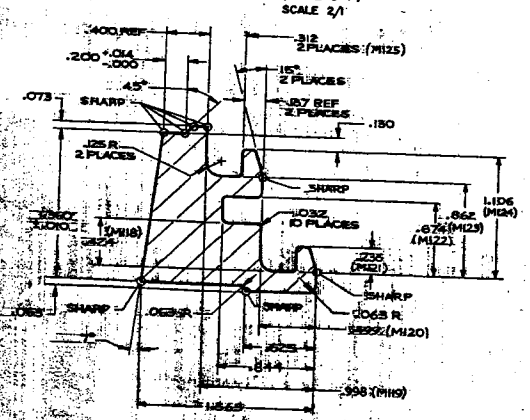

SECTION D-D
FIND NUMBERS NOT SHOWN
OMITTED FOR CLARITY
(SH 1, ZONE C-5)
SCALE 2/1

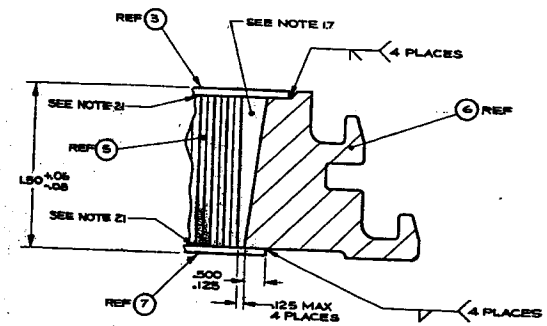

SECTION E-E
(SH 1, ZONE C-5)
SCALE 2/1

UNLESS OTHERWISE SPECIFIED DIMENSIONS ARE IN INCHES TOLERANCES: ANGLES ± 2 PLACE DECIMALS ± 3 PLACE DECIMALS ±	DRAWN VECO (DKB)	DATE 8 JAN 68	U.S. ARMY MOBILITY EQUIPMENT COMMAND ENGINEER RESEARCH AND DEVELOPMENT LABORATORIES, FORT BELVOIR, VA.	
DO NOT SCALE THIS DRAWING	CHECKED		MAT, LANDING, FULL PANEL, MEDIUM DUTY	
SHARP EDGES TO	COMMODITY ENGINEER			
FILLET RADII TO	APPROVED FOR PRODUCTION CHIEF, PRODUCTION ENGINEERING			
MATERIAL	RELEASED FOR PROCUREMENT CHIEF, ENGINEERING DEPT.		SIZE D	CODE IDENT NO. 97403
NEXT ASSY / USED ON	DATE 8 MAR 1968		SCALE	13216E9528
APPLICATION				SHEET 2
FOR INTERPRETATION OF DRAWING SEE ATC-ERE EXT.281				

REVISIONS				
ZONE	LTR	DESCRIPTION	DATE	APPROVED
	A	SEE NOR.	26APR68	
	C	SEE NOR.	18JAN75	
	D	SEE ECP NO. 87HE3366A1	8JUN87	

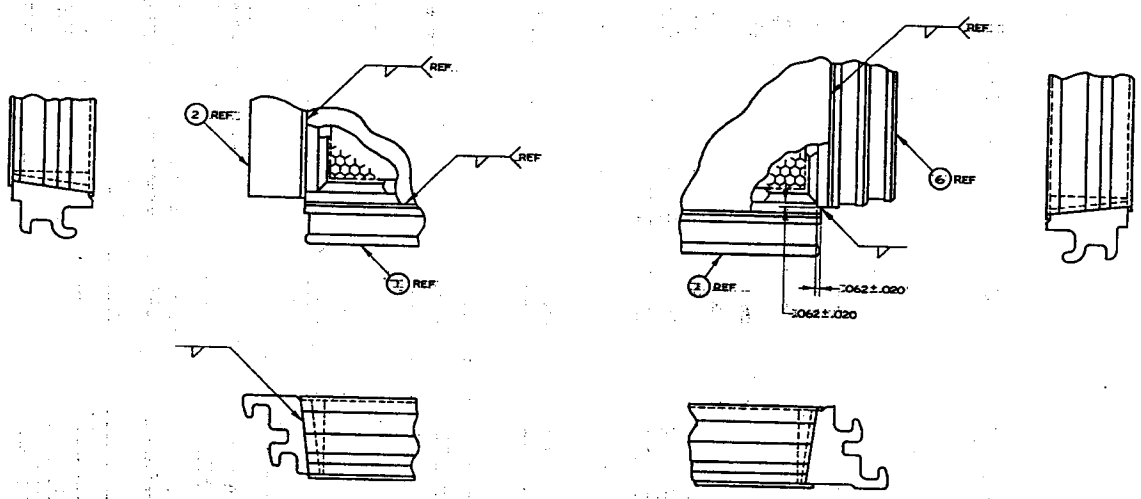

VIEW G-G
(SH 1, ZONE A-8)

VIEW F-F
(SH 1, ZONE A-5)

NOTES: (CONTINUED FROM SHEET 1)

16. FEATURE FIND NO. 4 MUST BE PARALLEL TO -A- WITHIN .024 OR .026 AS DELINEATED ON THE DRAWING.

17. BOND EXTRUSIONS, FIND NO. 1,2,4 AND 6, TO HONEYCOMB AND TOP AND BOTTOM SHEETS, FIND NO. 5,3 AND 7, USING POTTING COMPOUND. FIND NO. 8. LANDING MAT SHALL INCLUDE PROVISION FOR INJECTION OF POTTING COMPOUND, FIND NO. 8 AND BLEED HOLES.

18. INDICATES DIRECTION OF HONEYCOMB CORE RIBBON.

19. UNLESS OTHERWISE SPECIFIED, TOLERANCES ON EXTRUDED SHAPES SHALL BE IN ACCORDANCE WITH ANS N35.2.

20. WELDING, FINISHING, PAINTING, ADHESIVE AND MARKING SHALL BE IN ACCORDANCE WITH SRD ITEM SPECIFICATION.

21. BOND TOP AND BOTTOM SHEETS, FIND NO. 2 AND 7, TO HONEYCOMB, FIND NO. 5, USING ADHESIVE, FIND NO. 9.

22. FOR INTERPRETATION OF:
    WELDING SYMBOLS, SEE ANS/AWS A2.4.

23.

24. THE DATUM TARGET SYMBOL ⊕ DESIGNATES A POINT OF CONTACT ON THE PART DATUM PLANE WITH GOVERNMENT FURNISHED INSPECTION EQUIPMENT.

25. QUALITY ASSURANCE PROVISIONS:
    THESE REQUIREMENTS APPLY WHEN THIS PART IS PROCURED AS A REPAIR PART.
    A. SAMPLING FOR INSPECTION SHALL BE IN ACCORDANCE WITH MIL-STD-105.
    B. CLASSIFICATION OF CHARACTERISTICS:
       CRITICAL: NONE
       MAJOR AQL 1.0%
       M101-137
    C. GOVERNMENT INSPECTION EQUIPMENT DESIGN EXISTS FOR CHARACTERISTICS M101 THROUGH 137.

UNLESS OTHERWISE SPECIFIED DIMENSIONS ARE IN INCHES TOLERANCES: ANGLES ± 2 PLACE DECIMALS ± 3 PLACE DECIMALS ±	DRAWN VECO (CJC)	DATE 8 JAN 68	U.S. ARMY MOBILITY EQUIPMENT COMMAND ENGINEER RESEARCH AND DEVELOPMENT LABORATORIES, FORT BELVOIR, VA.	
DO NOT SCALE THIS DRAWING	CHECKED		MAT, LANDING, FULL PANEL, MEDIUM DUTY	
SHARP EDGES TO	DESIGN ENGINEER	6/2/68		
FILLET RADII TO	COMMODITY ENGINEER			
MATERIAL	APPROVED FOR PRODUCTION CHIEF, PRODUCTION ENGINEERING			
NEXT ASSY / USED ON	RELEASED FOR PROCUREMENT CHIEF, ENGINEERING DEPT.		SIZE D / CODE IDENT NO. 97403	13216E9528
APPLICATION	DATE 8 MAR 1966		SCALE	SHEET 3
FOR INTERPRETATION OF DRAWING AND STD-100 APPLIES				

ZONE	LTR	REVISIONS DESCRIPTION	DATE	APPROVED
	A	SEE NOR.	26 APR 68	[illegible]
	C	SEE NOR.	19 JAN 75	[illegible]
	D	SEE ECP NO. 87HE3366R	8 JUN 87	[illegible]

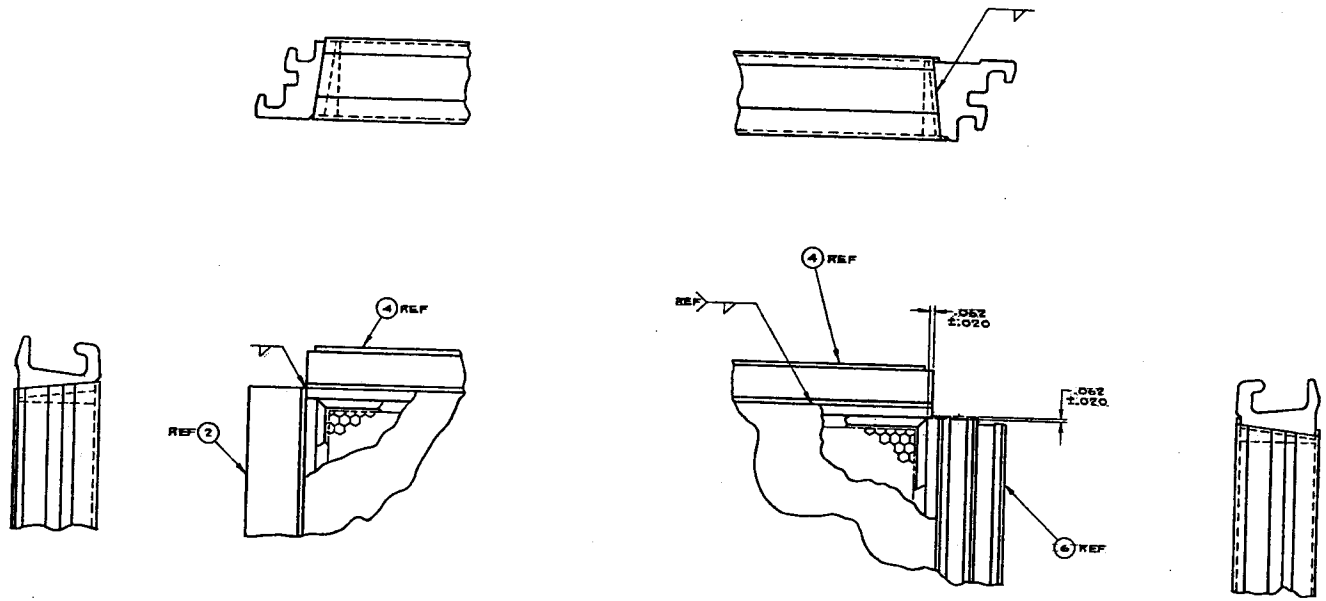

VIEW H-H
(SH 1, ZONE D-8)

VIEW J-J
(SH 1, ZONE D-4)

NEXT ASSY	USED ON		
APPLICATION			

UNLESS OTHERWISE SPECIFIED DIMENSIONS ARE IN INCHES TOLERANCES: ANGLES ± 3 PLACE DECIMALS ± 2 PLACE DECIMALS ±

DO NOT SCALE THIS DRAWING

SHARP EDGES TO

FILLET RADII TO

MATERIAL

DRAWN VECO (MCS) DATE 7 JAN 67

CHECKED [illegible] 7 MAR 68

DESIGN APPROVAL J. T. [illegible] 8/3/68

COMMODITY ENGINEER

APPROVED FOR PRODUCTION [illegible]

CHIEF, PRODUCTION ENGINEERING

RELEASED FOR PROCUREMENT [illegible]

CHIEF, ENGINEERING DEPT.

DATE 8 MAR 1968

U.S. ARMY MOBILITY EQUIPMENT COMMAND
ENGINEER RESEARCH AND DEVELOPMENT LABORATORIES, FORT BELVOIR, VA.

MAT, LANDING, FULL PANEL, MEDIUM DUTY

SIZE	CODE IDENT NO.	
D	97403	13216E9528

SCALE

SHEET 4

13216E9529_97403_D_0001_0001_U_N_
February 01, 2003 1:38 PM

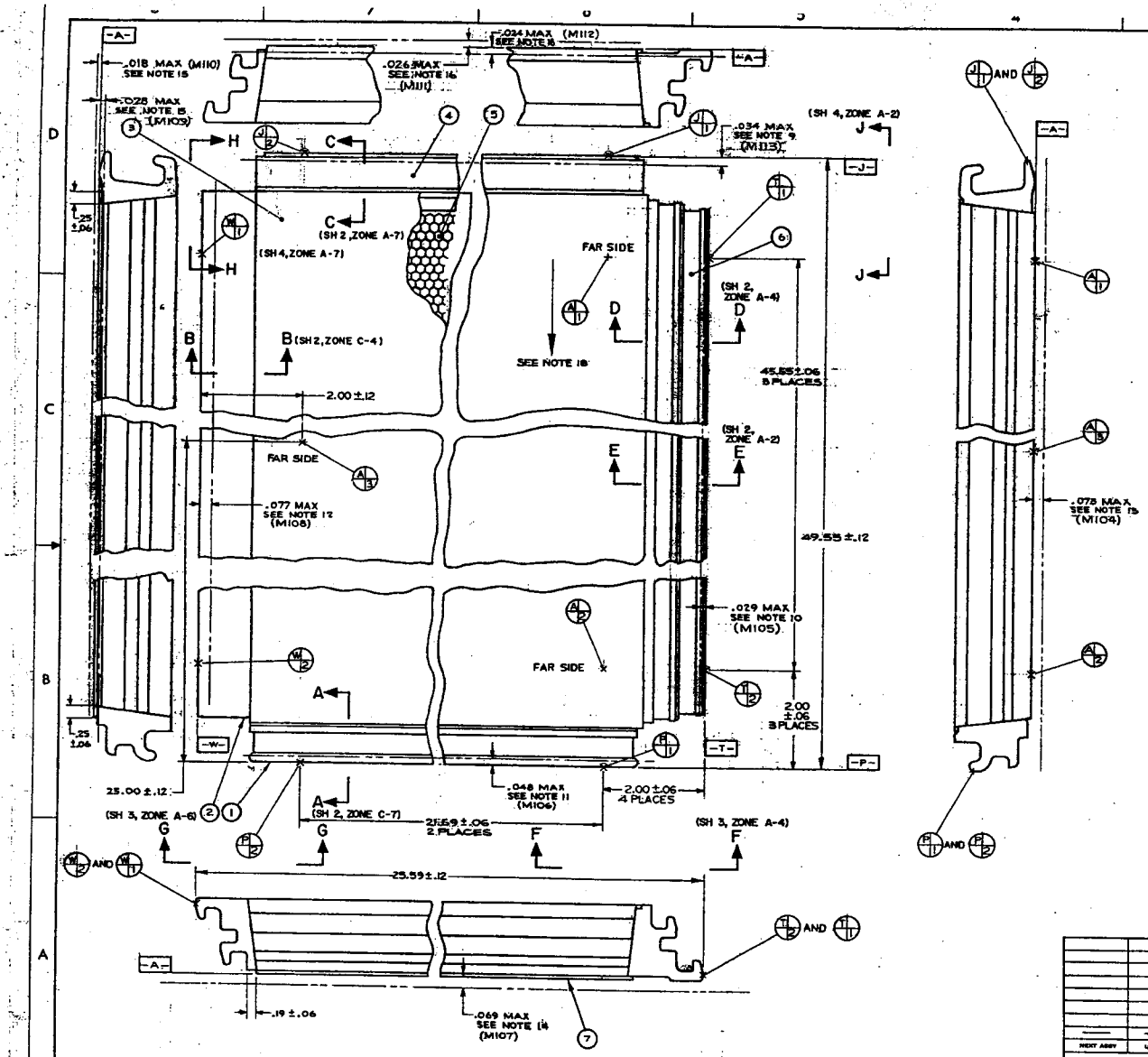

SHEETS 4	3	2	1	ZONE	LTR	STATUS OF REVISIONS DESCRIPTION	DATE	APPROVED
A	A	A	A		A	SEE NOR.	26 APR 68	
	-	-	B		B	SEE NOR.	25 JUN 68	
C	C	C	C		C	SEE NOR.	18 JAN 75	
D	D	D	D		D3	SEE ECP NO. 87HE3366R1	8 JUN 87	

NOTES:

1. DATUM -A- IS A PLANE PASSING THRU DATUM POINTS A1, A2 AND A3
2. DATUM -J- SHALL BE A PLANE PASSING THRU DATUM POINTS J2 AND J1 PERPENDICULAR TO DATUM -A- .
(M101) 3. THE LINE THRU DATUM POINTS P2 AND P1 SHALL BE PARALLEL TO DATUM -J- WITHIN .067.
4. DATUM -P- SHALL BE A PLANE PASSING THRU DATUM POINTS P2 AND P1 PERPENDICULAR TO DATUM -A- .
(M102) 5. THE LINE THRU DATUM POINTS T1 AND T2 SHALL BE PERPENDICULAR TO DATUM -P- WITHIN .067.
6. DATUM -T- SHALL BE A PLANE PASSING THRU DATUM POINTS T1 AND T2 AND PERPENDICULAR TO DATUM -A- .
(M103) 7. THE LINE THRU DATUM POINTS W2 AND W1 SHALL BE PERPENDICULAR TO DATUM -J- WITHIN .057.
8. DATUM -W- SHALL BE A PLANE PASSING THRU DATUM POINTS W2 AND W1 AND PERPENDICULAR TO DATUM -A- .
9. FEATURE FIND NO. 4 MAY DEPART FROM DATUM PLANE -J- BETWEEN DATUM POINTS J2 AND J1 BY .034 AS DELINEATED ON THE DRAWING.
10. FEATURE FIND NO. 6 MAY DEPART FROM DATUM PLANE -T- BETWEEN DATUM POINTS T1 AND T2 BY .029 AS DELINEATED ON DRAWING.
11. FEATURE FIND NO. 1 MAY DEPART FROM DATUM PLANE -P- BETWEEN DATUM POINTS P2 AND P1 BY .048 AS DELINEATED ON DRAWING.
12. FEATURE FIND NO. 2 MAY DEPART FROM DATUM PLANE -W- BETWEEN DATUM POINTS W2 AND W1 BY .077 AS DELINEATED ON DRAWING.
13. FEATURE FIND NO. 6 MUST BE PARALLEL TO DATUM -A- WITHIN .073 AS DELINEATED ON THE DRAWING.
14. FEATURE FIND NO. 1 MUST BE PARALLEL TO DATUM -A- WITHIN .069 AS DELINEATED ON THE DRAWING.
15. FEATURE FIND NO. 2 MUST BE PARALLEL TO DATUM -A- WITHIN .018 OR .026 AS DELINEATED ON THE DRAWING.

(NOTES CONTINUED ON SHEET 3)

FIND NO.	QTY	CODE IDENT	DWG SIZE	PART OR IDENTIFYING NO.	QTY REQD	NOMENCLATURE OR DESCRIPTION	SPECIFICATION	MATERIAL
9	8			TYPE I, CLASS 2	AR	ADHESIVE	MIL-A-25463	
8	8/5		B	13216E9530	AR	POTTING COMPOUND		
7				ALY 6061-T6	1	SHEET, .063 STK	ASTM B209	AL ALY
6				ALY 6061-T6	1	EXTRUDED SHAPE	ASTM B221	AL ALY
5				8.0-1/8-2024(5056)D	1	HONEYCOMB	MIL-C-7438	
4				ALY 6061-T6	1	EXTRUDED SHAPE	ASTM B221	AL ALY
3				ALY 6061-T6	1	SHEET, .063 STK	ASTM B209	AL ALY
2				ALY 6061-T6	1	EXTRUDED SHAPE	ASTM B221	AL ALY
1				ALY 6061-T6	1	EXTRUDED SHAPE	ASTM B221	AL ALY

LIST OF MATERIAL

S-SOURCE CONTROL DWG
C-SPEC CONTROL DWG
MANUFTURE USE DWG
AR-AS REQUIRED
B-BULK MATERIAL

NEXT ASSY	USED ON
APPLICATION	

UNLESS OTHERWISE SPECIFIED DIMENSIONS ARE IN INCHES
TOLERANCES: ANGLES ± ___
2 PLACE DECIMALS ± ___
3 PLACE DECIMALS ± ___
DO NOT SCALE THIS DRAWING
SHARP EDGES .010 TO .015
FILLET RADII ___ TO ___
MATERIAL

DRAWN VECO (CJS) DATE 15 NOV 67
DESIGN ENGINEER
COMMODITY ENGINEER
APPROVED FOR PRODUCTION
CHIEF, PRODUCTION ENGINEERING
RELEASED FOR PROCUREMENT
CHIEF, ENGINEERING DEPT.
DATE 8 MAR 1968

U.S. ARMY MOBILITY EQUIPMENT COMMAND
ENGINEER RESEARCH AND DEVELOPMENT LABORATORIES, FORT BELVOIR, VA.

MAT, LANDING, HALF PANEL, MEDIUM DUTY

SIZE D | CODE IDENT NO. 97403 | 13216E9529

SCALE 1/1 | SHEET 1 OF 4

REVISIONS				
ZONE	LTR	DESCRIPTION	DATE	APPROVED
	A	SEE NOR.	26 APR 68	
	C	SEE NOR.	20 JAN 75	
	D	SEE ECP NO. 87HE3366R1	8 JUN 87	

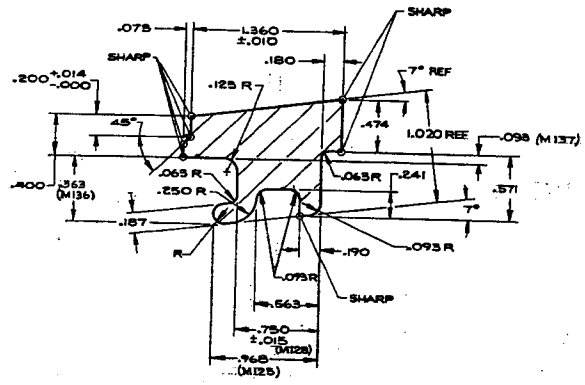

SECTION A-A
FIND NUMBERS NOT SHOWN
OMITTED FOR CLARITY
(SH 1, ZONE B-7)
SCALE 2/1

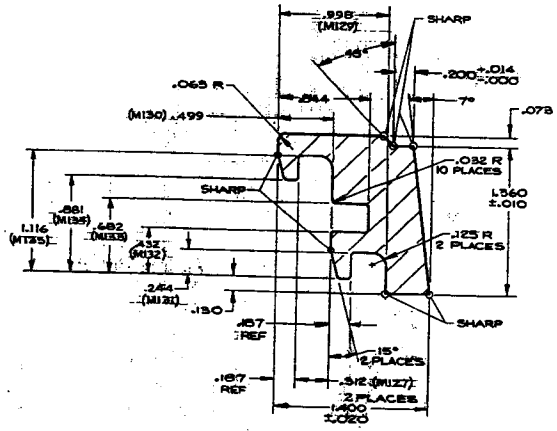

SECTION B-B
FIND NUMBERS NOT SHOWN
OMITTED FOR CLARITY
(SH 1, ZONE C-7)
SCALE 2/1

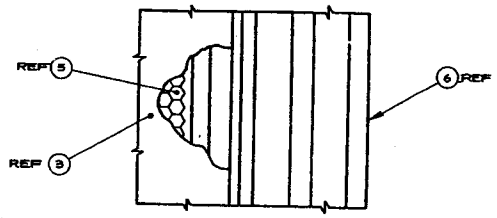

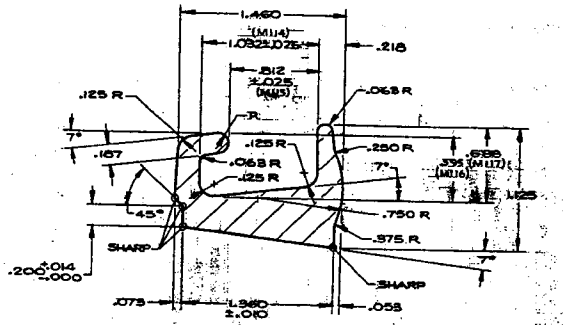

SECTION C-C
FIND NUMBERS NOT SHOWN
OMITTED FOR CLARITY
(SH 1, ZONE D-7)
SCALE 2/1

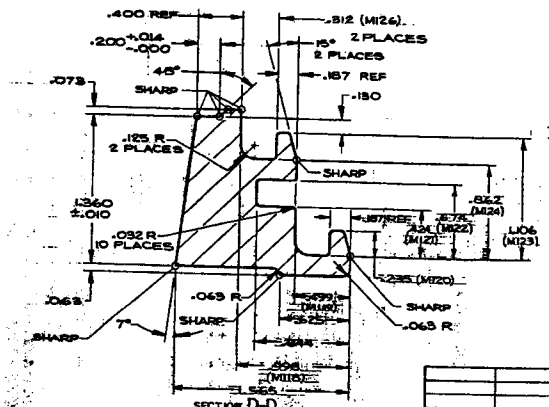

SECTION D-D
FIND NUMBERS NOT SHOWN
OMITTED FOR CLARITY
(SH 1, ZONE C-5)
SCALE 2/1

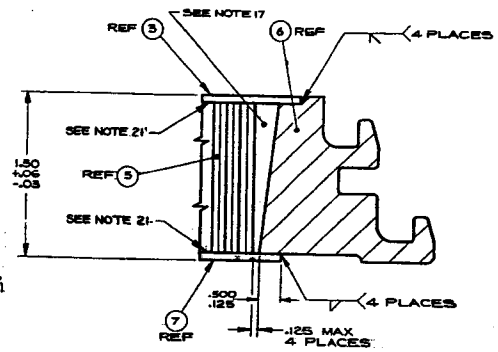

SECTION E-E
(SH 1, ZONE C-5)
SCALE 2/1

UNLESS OTHERWISE SPECIFIED DIMENSIONS ARE IN INCHES TOLERANCES: ANGLE ± 2 PLACE DECIMALS ± 3 PLACE DECIMALS ±	DRAWN VEDO (B08)	DATE 16 NOV 67	U.S. ARMY MOBILITY EQUIPMENT COMMAND ENGINEER RESEARCH AND DEVELOPMENT LABORATORIES, FORT BELVOIR, VA.
DO NOT SCALE THIS DRAWING	DESIGN APPROVAL		MAT, LANDING, HALF PANEL, MEDIUM DUTY
SHARP EDGES TO	COMMODITY ENGINEER	4/2/68	
FILLET RADII TO	APPROVED FOR PRODUCTION CHIEF, PRODUCTION ENGINEERING		
MATERIAL	RELEASED FOR DOCUMENT CHIEF, ENGINEERING DEPT.		SIZE D / CODE IDENT NO. 97403 / 13216E9529
NEXT ASSY / USED ON	DATE 8 MAR 1968	SCALE	SHEET 2
APPLICATION			

REVISIONS				
ZONE	LTR	DESCRIPTION	DATE	APPROVED
	A	SEE NOR.	26APR68	[illegible]
	C	SEE NOR.	18JAN75	[illegible]
	D	SEE ECP NO. 87HE3366R1	8JUN87	[illegible]

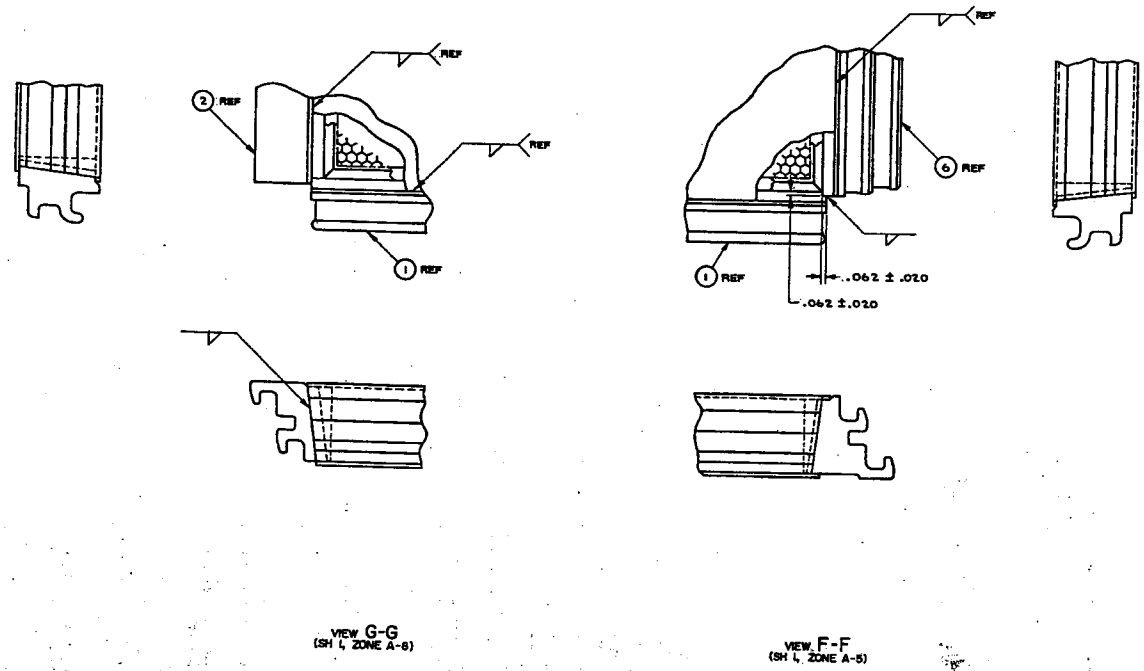

NOTES:

16. FEATURE FIND NO. 4 MUST BE PARALLEL TO -A- WITHIN .024 OR .026 AS DELINEATED ON THE DRAWING.
17. BOND EXTRUSIONS FIND NO. 1, 2, 4 AND 6 TO HONEYCOMB AND TOP AND BOTTOM SHEETS FIND NO. 5, 3 AND 7 USING POTTING COMPOUND FIND NO. 8. LANDING MAT SHALL INCLUDE PROVISION FOR INJECTION OF POTTING COMPOUND FIND NO. 8 AND BLEED HOLES.
18. INDICATES DIRECTION OF HONEYCOMB CORE RIBBON.
19. UNLESS OTHERWISE SPECIFIED, TOLERANCES ON EXTRUDED SHAPES SHALL BE IN ACCORDANCE WITH ANS N35.2.
20. WELDING, FINISHING, PAINTING, ADHESIVE AND MARKING SHALL BE IN ACCORDANCE WITH END ITEM SPECIFICATION.
21. BOND TOP AND BOTTOM SHEETS FIND NO. 3 AND 7 TO HONEYCOMB FIND NO. 5 USING ADHESIVE FIND NO. 9.
22. FOR INTERPRETATION OF:
    WELDING SYMBOLS, SEE ANS/AWS A2.4.
23.
24. THE DATUM TARGET SYMBOL ⊕ DESIGNATES A POINT OF CONTACT ON THE PART DATUM PLANE WITH GOVERNMENT FURNISHED INSPECTION EQUIPMENT.
25. QUALITY ASSURANCE PROVISIONS:
    THESE REQUIREMENTS APPLY WHEN THIS PART IS PROCURED AS A REPAIR PART:
    A. SAMPLING FOR INSPECTION SHALL BE IN ACCORDANCE WITH MIL-STD-105.
    B. CLASSIFICATION OF CHARACTERISTICS:
       CRITICAL: NONE
       MAJOR AQL 1.0%
       M101-137
    C. GOVERNMENT INSPECTION EQUIPMENT DESIGN EXISTS FOR CHARACTERISTICS M101 THROUGH 137.

NEXT ASSY	USED ON
APPLICATION	

FOR INTERPRETATION OF DRAWING AND ASSOCIATED SPECIFICATIONS

UNLESS OTHERWISE SPECIFIED DIMENSIONS ARE IN INCHES TOLERANCES: ANGLES ± 3 PLACE DECIMALS ± 2 PLACE DECIMALS ±

DO NOT SCALE THIS DRAWING

SHARP EDGES TO

FILLET RADII TO

MATERIAL

DRAWN VECO (CJS) DATE 16 NOV 67

CHECKED [signature] 7 MAR 68

DESIGN APPROVAL J. T. [signature] 8/3/68 COMMODITY ENGINEER

APPROVED FOR PRODUCTION [signature] CHIEF, PRODUCTION ENGINEERING

RELEASED FOR PROCUREMENT [signature] CHIEF, ENGINEERING DEPT.

DATE 8 MAR 1968

U.S. ARMY MOBILITY EQUIPMENT COMMAND
ENGINEER RESEARCH AND DEVELOPMENT LABORATORIES, FORT BELVOIR, VA.

MAT, LANDING, HALF PANEL, MEDIUM DUTY

SIZE	CODE IDENT NO.	
D	97403	13216E9529

SCALE

SHEET 3

ZONE	LTR	DESCRIPTION	DATE	APPROVED
	A	SEE NOR.	26APR68	
	C	SEE NOR.	18 JAN 75	
	D	SEE ECP NO. 87HE3366R1	3 JUN 87	

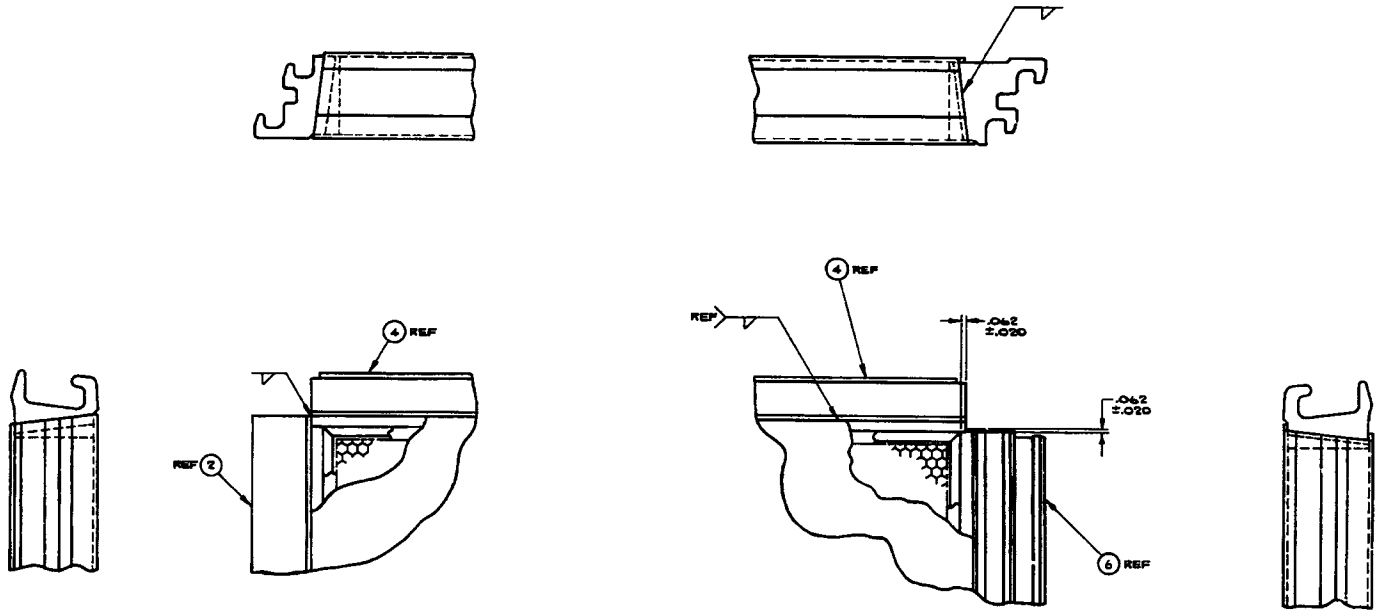

VIEW H-H
(SH 1, ZONE D-8)

VIEW J-J
(SH 1, ZONE D-5)

UNLESS OTHERWISE SPECIFIED DIMENSIONS ARE IN INCHES TOLERANCES ANGLES ± 2 PLACE DECIMALS ± 3 PLACE DECIMALS ±	DRAWN VEDO (CJS)	DATE 15 NOV 67	U.S. ARMY MOBILITY EQUIPMENT COMMAND ENGINEER RESEARCH AND DEVELOPMENT LABORATORIES, FORT BELVOIR, VA.	
DO NOT SCALE THIS DRAWING	CHECKED		MAT, LANDING, HALF PANEL, MEDIUM DUTY	
SHARP EDGES TO	DESIGN APPROVED			
FILLET RADII TO	COMMODITY ENGINEER			
MATERIAL	APPROVED FOR PRODUCTION CHIEF, PRODUCTION ENGINEERING			
NEXT ASSY / USED ON	RELEASED FOR PROCUREMENT CHIEF, ENGINEERING DEPT.		SIZE D / CODE IDENT NO. 97403	13216E9529
APPLICATION	DATE 8 MAR 1968		SCALE	SHEET 4

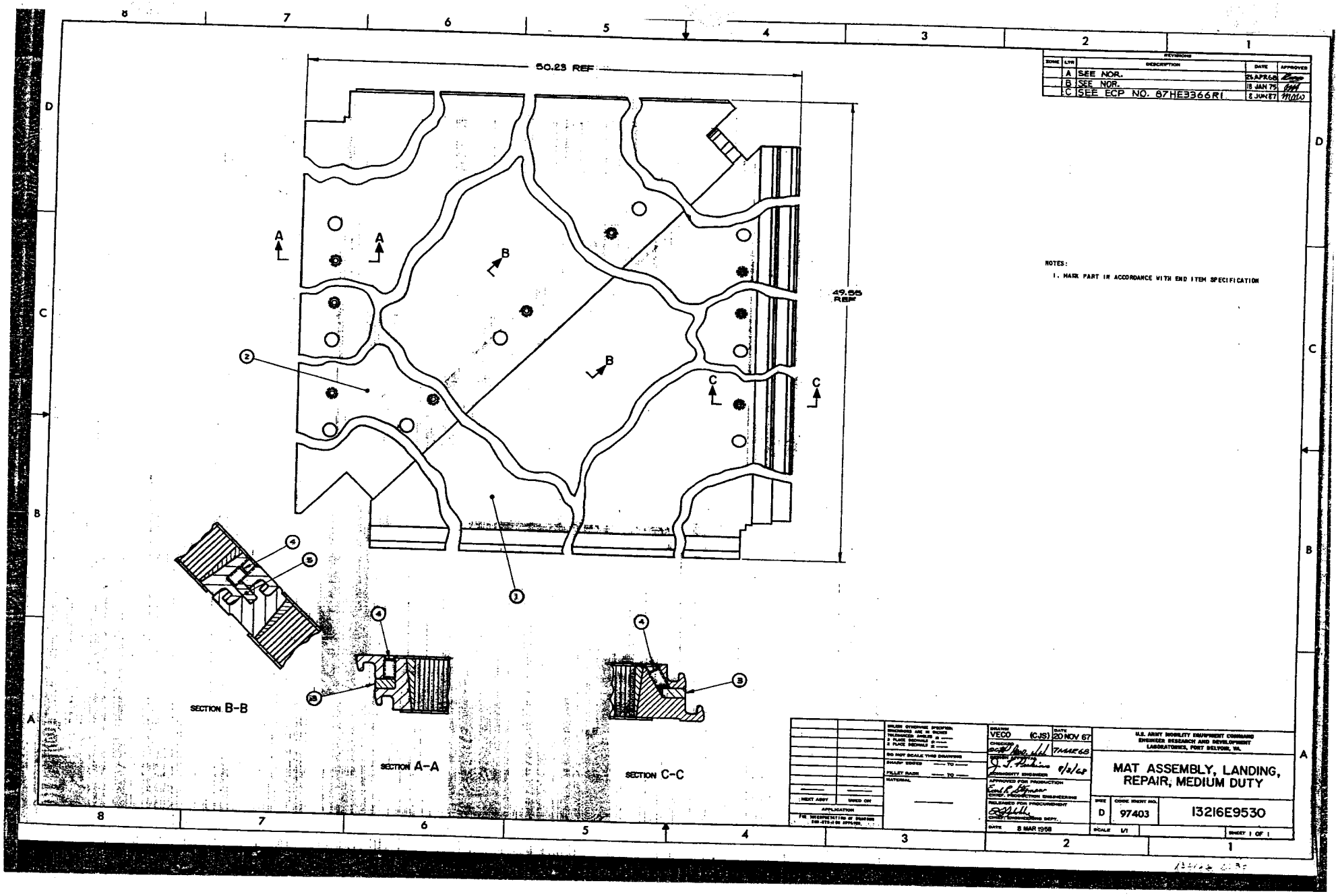
50.23 REF
49.55 REF
A
B
C
SECTION B-B
SECTION A-A
SECTION C-C
REVISIONS
ZONE | LTR | DESCRIPTION | DATE | APPROVED
A | SEE NOR. | 25 APR 68
B | SEE NOR. | 18 JAN 75
C | SEE ECP NO. 87HE3366R1 | 8 JUN 87
NOTES:
1. MARK PART IN ACCORDANCE WITH END ITEM SPECIFICATION
DRAWN VECO (CJS) DATE 20 NOV 67
U.S. ARMY MOBILITY EQUIPMENT COMMAND
ENGINEER RESEARCH AND DEVELOPMENT LABORATORIES, FORT BELVOIR, VA.
MAT ASSEMBLY, LANDING, REPAIR, MEDIUM DUTY
SIZE D
CODE IDENT NO. 97403
13216E9530
SCALE 1/1
SHEET 1 OF 1
DATE 8 MAR 1968
DO NOT SCALE THIS DRAWING
APPROVED FOR PRODUCTION
RELEASED FOR PROCUREMENT
NEXT ASSY
USED ON
APPLICATION

13216E9531_87403_D_0001_0001_U_N.
February 01, 2000 10:07 AM

SHEETS 3	2	1	ZONE	LTR	STATUS OF REVISIONS DESCRIPTION	DATE	APPROVED
A	A	A		A	SEE NOR.	26APR68	
-	-	B		B	SEE NOR.	25JUN68	
C	C	C		C	SEE NOR.	18JAN70	
D	D	D		D	SEE ECP NO. 87HE3366R1	8JUN87	

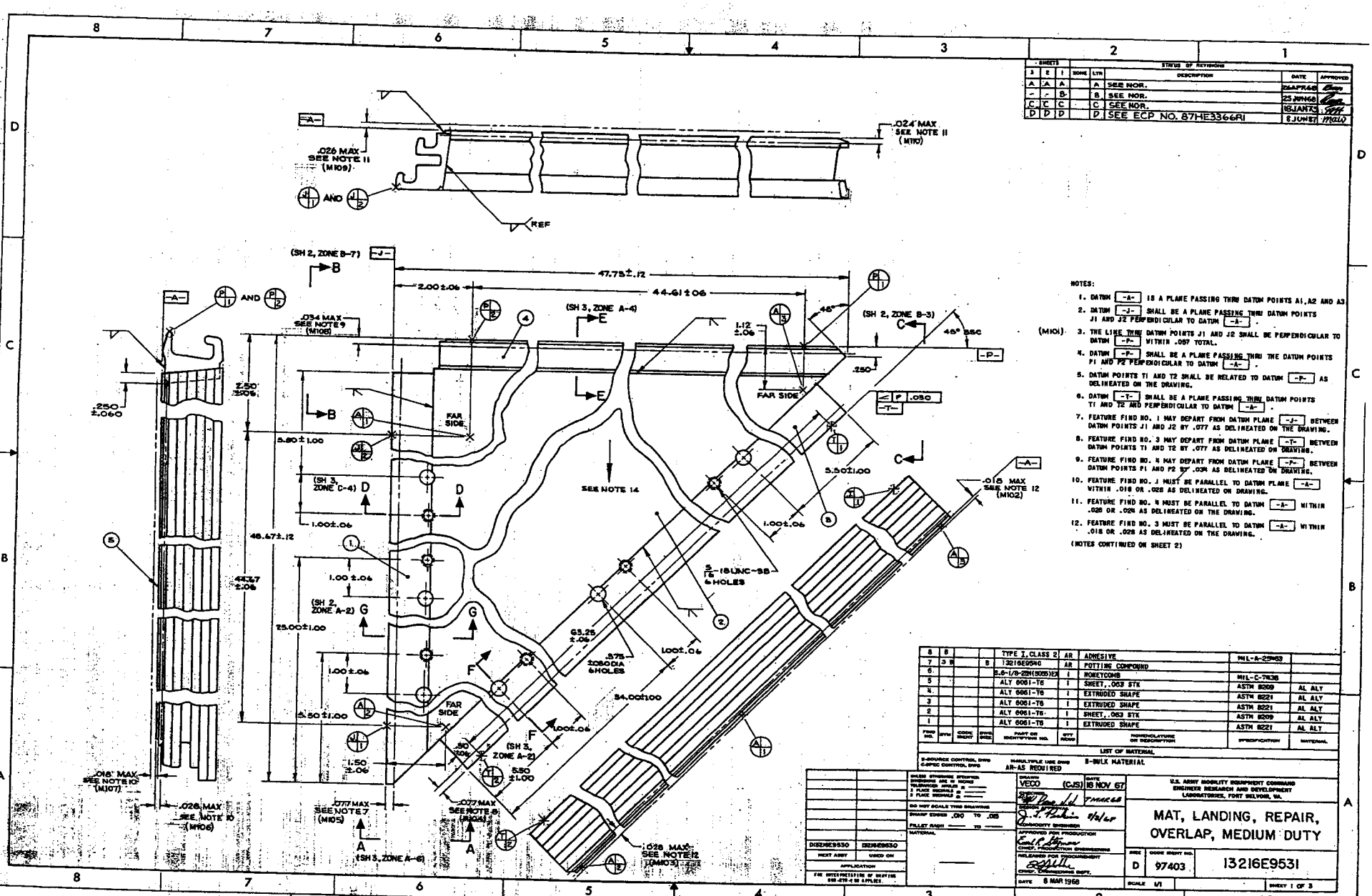

NOTES:

1. DATUM -A- IS A PLANE PASSING THRU DATUM POINTS A1, A2 AND A3
2. DATUM -J- SHALL BE A PLANE PASSING THRU DATUM POINTS J1 AND J2 PERPENDICULAR TO DATUM -A-.
3. THE LINE THRU DATUM POINTS J1 AND J2 SHALL BE PERPENDICULAR TO DATUM -P- WITHIN .057 TOTAL. (M101)
4. DATUM -P- SHALL BE A PLANE PASSING THRU THE DATUM POINTS P1 AND P2 PERPENDICULAR TO DATUM -A-.
5. DATUM POINTS T1 AND T2 SHALL BE RELATED TO DATUM -P- AS DELINEATED ON THE DRAWING.
6. DATUM -T- SHALL BE A PLANE PASSING THRU DATUM POINTS T1 AND T2 AND PERPENDICULAR TO DATUM -A-.
7. FEATURE FIND NO. 1 MAY DEPART FROM DATUM PLANE -J- BETWEEN DATUM POINTS J1 AND J2 BY .077 AS DELINEATED ON THE DRAWING.
8. FEATURE FIND NO. 3 MAY DEPART FROM DATUM PLANE -T- BETWEEN DATUM POINTS T1 AND T2 BY .077 AS DELINEATED ON DRAWING.
9. FEATURE FIND NO. 4 MAY DEPART FROM DATUM PLANE -P- BETWEEN DATUM POINTS P1 AND P2 BY .034 AS DELINEATED ON DRAWING.
10. FEATURE FIND NO. 1 MUST BE PARALLEL TO DATUM PLANE -A- WITHIN .016 OR .026 AS DELINEATED ON DRAWING.
11. FEATURE FIND NO. 4 MUST BE PARALLEL TO DATUM -A- WITHIN .026 OR .024 AS DELINEATED ON THE DRAWING.
12. FEATURE FIND NO. 3 MUST BE PARALLEL TO DATUM -A- WITHIN .016 OR .028 AS DELINEATED ON THE DRAWING.

(NOTES CONTINUED ON SHEET 2)

FIND NO.	SYM	CODE IDENT	DWG SIZE	PART OR IDENTIFYING NO.	QTY REQD	NOMENCLATURE OR DESCRIPTION	SPECIFICATION	MATERIAL
8	B			TYPE I, CLASS 2	AR	ADHESIVE	MIL-A-23963	
7	3 B		B	13216E9540	AR	POTTING COMPOUND		
6				3.0-1/8-22H(5056)EX	1	HONEYCOMB	MIL-C-7838	
5				ALY 6061-T6	1	SHEET, .063 STK	ASTM B209	AL ALY
4				ALY 6061-T6	1	EXTRUDED SHAPE	ASTM B221	AL ALY
3				ALY 6061-T6	1	EXTRUDED SHAPE	ASTM B221	AL ALY
2				ALY 6061-T6	1	SHEET, .063 STK	ASTM B209	AL ALY
1				ALY 6061-T6	1	EXTRUDED SHAPE	ASTM B221	AL ALY

LIST OF MATERIAL

S-SOURCE CONTROL DWG
C-OPSC CONTROL DWG
MANUFTURE USE DWG AR-AS REQUIRED
S-BULK MATERIAL

DO NOT SCALE THIS DRAWING	
SHARP EDGES .010 TO .015	
FILLET RADII ——— TO ———	
MATERIAL	
13216E9530	13216E9630
NEXT ASSY	USED ON
APPLICATION	

DRAWN VECO (CJS) DATE 18 NOV 67
DESIGN
COMMODITY ENGINEER
APPROVED FOR PRODUCTION
CHIEF, PRODUCTION ENGINEERING
RELEASED FOR PROCUREMENT
CHIEF, ENGINEERING DEPT.
DATE 8 MAR 1968

U.S. ARMY MOBILITY EQUIPMENT COMMAND
ENGINEER RESEARCH AND DEVELOPMENT LABORATORIES, FORT BELVOIR, VA.

MAT, LANDING, REPAIR, OVERLAP, MEDIUM DUTY

SIZE D CODE IDENT NO. 97403 13216E9531
SCALE 1/1 SHEET 1 OF 3

ZONE	LTR	DESCRIPTION	DATE	APPROVED
	A	SEE NOR.	26APR68	
	C	SEE NOR.	18JAN75	
	P	SEE ECP NO. 87HE3366RI	8JUN87	

NOTES: (CONTINUED)

20. THE DATUM TARGET SYMBOL ⊕ DESIGNATES A POINT OF CONTACT ON THE PART DATUM PLANE WITH GOVERNMENT FURNISHED INSPECTION EQUIPMENT.

21. QUALITY ASSURANCE PROVISIONS:
THESE REQUIREMENTS APPLY WHEN THIS PART IS PROCURED AS A REPAIR PART.
A. SAMPLING FOR INSPECTION SHALL BE IN ACCORDANCE WITH MIL-STD-105.
B. CLASSIFICATION OF CHARACTERISTICS:
CRITICAL: NONE
MAJOR AQL 1.0%
M101-120.
C. GOVERNMENT INSPECTION EQUIPMENT DESIGN EXISTS FOR CHARACTERISTICS M101 THROUGH 130.

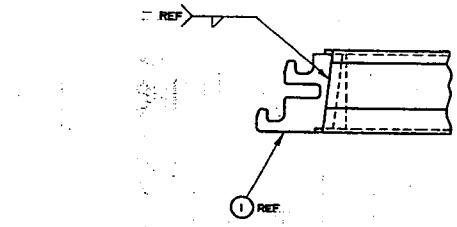

VIEW B-B
(SH 1, ZONE C-7)

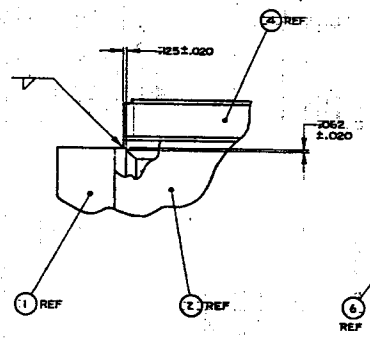

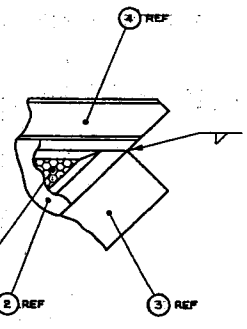

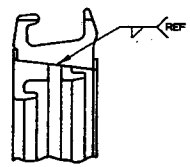

VIEW C-C
(SH 1, ZONE C-3)
FIND NO.7 OMITTED
FOR CLARITY

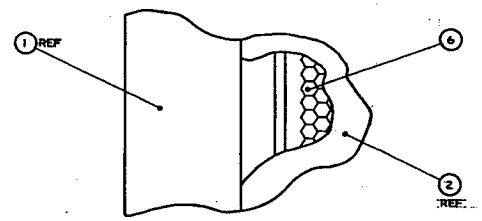

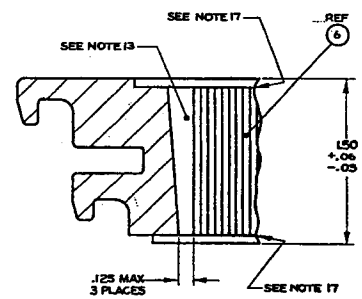

SECTION G-G
(SH 1, ZONE B-6)

NOTES: (CONTINUED FROM SHEET 1)

13. BOND EXTRUSIONS FIND NO. 1, 3 AND 4 TO HONEYCOMB AND TOP AND BOTTOM SHEETS FIND NO. 5, 2 AND 6 USING POTTING COMPOUND FIND NO. 7. LANDING MAT SHALL INCLUDE PROVISIONS FOR INJECTION OF POTTING COMPOUND FIND NO. 7 AND BLEED HOLES.

14. INDICATES DIRECTION OF HONEYCOMB CORE RIBBON.

15. UNLESS OTHERWISE SPECIFIED, TOLERANCES ON EXTRUDED SHAPES SHALL BE IN ACCORDANCE WITH AMS R35.2.

16. WELDING, FINISHING, PAINTING, ADHESIVE AND MARKING SHALL BE IN ACCORDANCE WITH END ITEM SPECIFICATION

17. BOND TOP AND BOTTOM SHEET FIND NO. 2 AND 6 TO HONEYCOMB FIND NO. 5 USING ADHESIVE FIND NO. 8

18. FOR INTERPRETATION OF:
WELDING SYMBOLS, SEE ANS/AWS A2.4.
SCREW THREAD STANDARDS, SEE FED-STD-H28.

19.

NEXT ASSY	USED ON
APPLICATION	

UNLESS OTHERWISE SPECIFIED DIMENSIONS ARE IN INCHES
TOLERANCES: ANGLES ±
2 PLACE DECIMALS ±
3 PLACE DECIMALS ±
DO NOT SCALE THIS DRAWING
SHARP EDGES TO
FILLET RADII TO
MATERIAL

DRAWN VECO (CJS) DATE 18 NOV 67
APPROVED FOR PRODUCTION
CHIEF, PRODUCTION ENGINEERING
RELEASED FOR PROCUREMENT
CHIEF, ENGINEERING DIV.
DATE 8 MAR 1968

U.S. ARMY MOBILITY EQUIPMENT COMMAND
ENGINEER RESEARCH AND DEVELOPMENT LABORATORIES, FORT BELVOIR, VA.

MAT, LANDING, REPAIR, OVERLAP, MEDIUM DUTY

SIZE	CODE IDENT NO.	
D	97403	13216E9531
SCALE		SHEET 2

ZONE	LTR	REVISIONS DESCRIPTION	DATE	APPROVED
	A	SEE NOR.	24 APR 68	
	C	SEE NOR.	18 JAN 73	
	D	SEE ECP NO. 87HE3366R1	8 JUN 87	

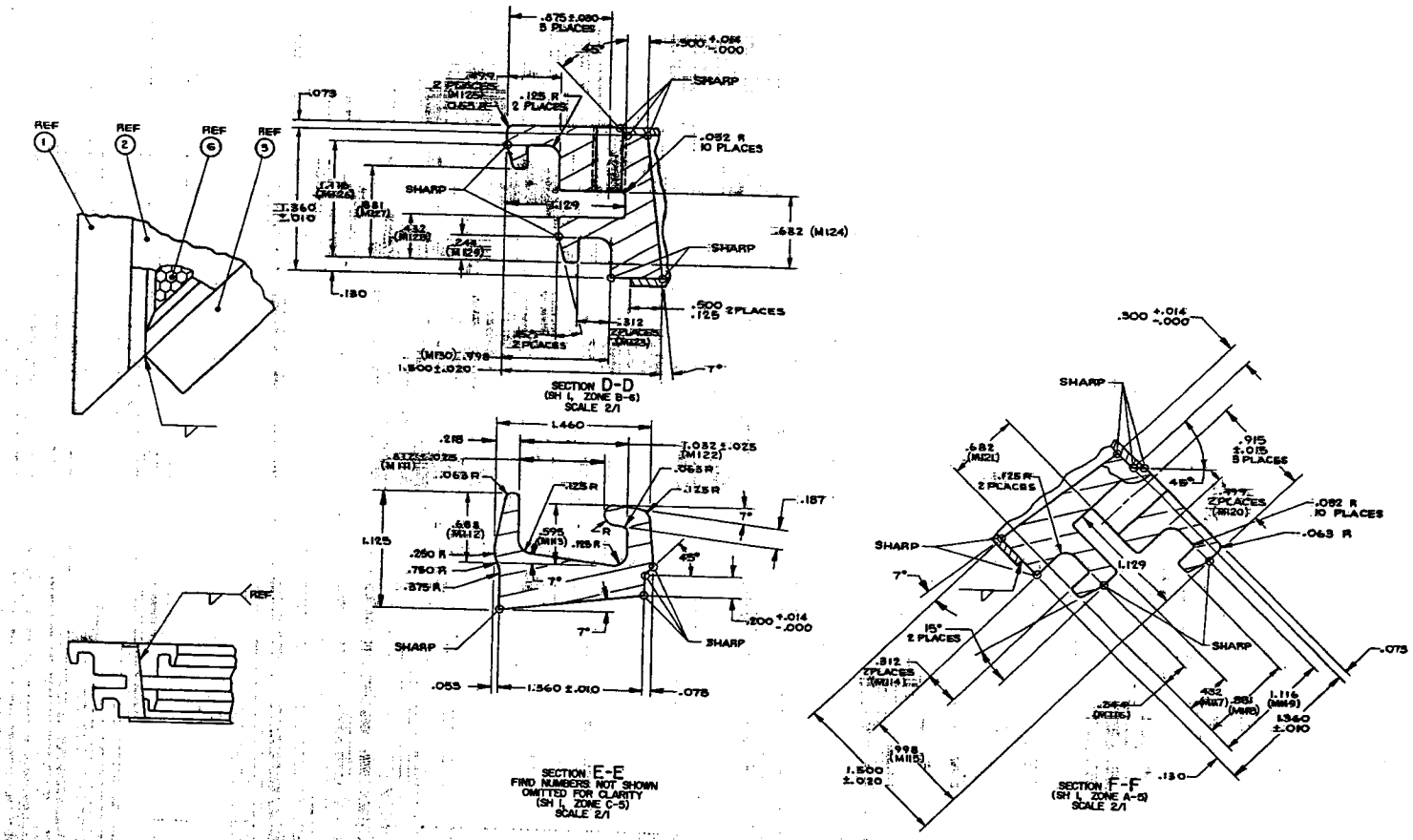

DRAWN VECO (CJS)	DATE 18 NOV 67	U.S. ARMY MOBILITY EQUIPMENT COMMAND ENGINEERS RESEARCH AND DEVELOPMENT LABORATORIES, FORT BELVOIR, VA.	MAT, LANDING, REPAIR, OVERLAP, MEDIUM DUTY
CHECKED			
COMMODITY ENGINEER	4/2/68		
APPROVED FOR PRODUCTION CHIEF, PRODUCTION ENGINEERING			
RELEASED FOR PROCUREMENT CHIEF, PROCUREMENT DEPT.		SIZE D	CODE IDENT NO. 97403 — 13216E9531
DATE 5 MAR 1968		SCALE	SHEET 3

MILDS STRUCTURE INCOPTOR DIMENSIONS ARE IN INCHES TOLERANCES UNLESS IS 2 PLACE DECIMALS ± 3 PLACE DECIMALS ±

DO NOT SCALE THIS DRAWING

SHARP EDGES TO

FILLET RADII TO

MATERIAL

NEXT ASSY | USED ON

APPLICATION

FOR INTERPRETATION OF DRAWING SEE ATP-4 OR APPROP.

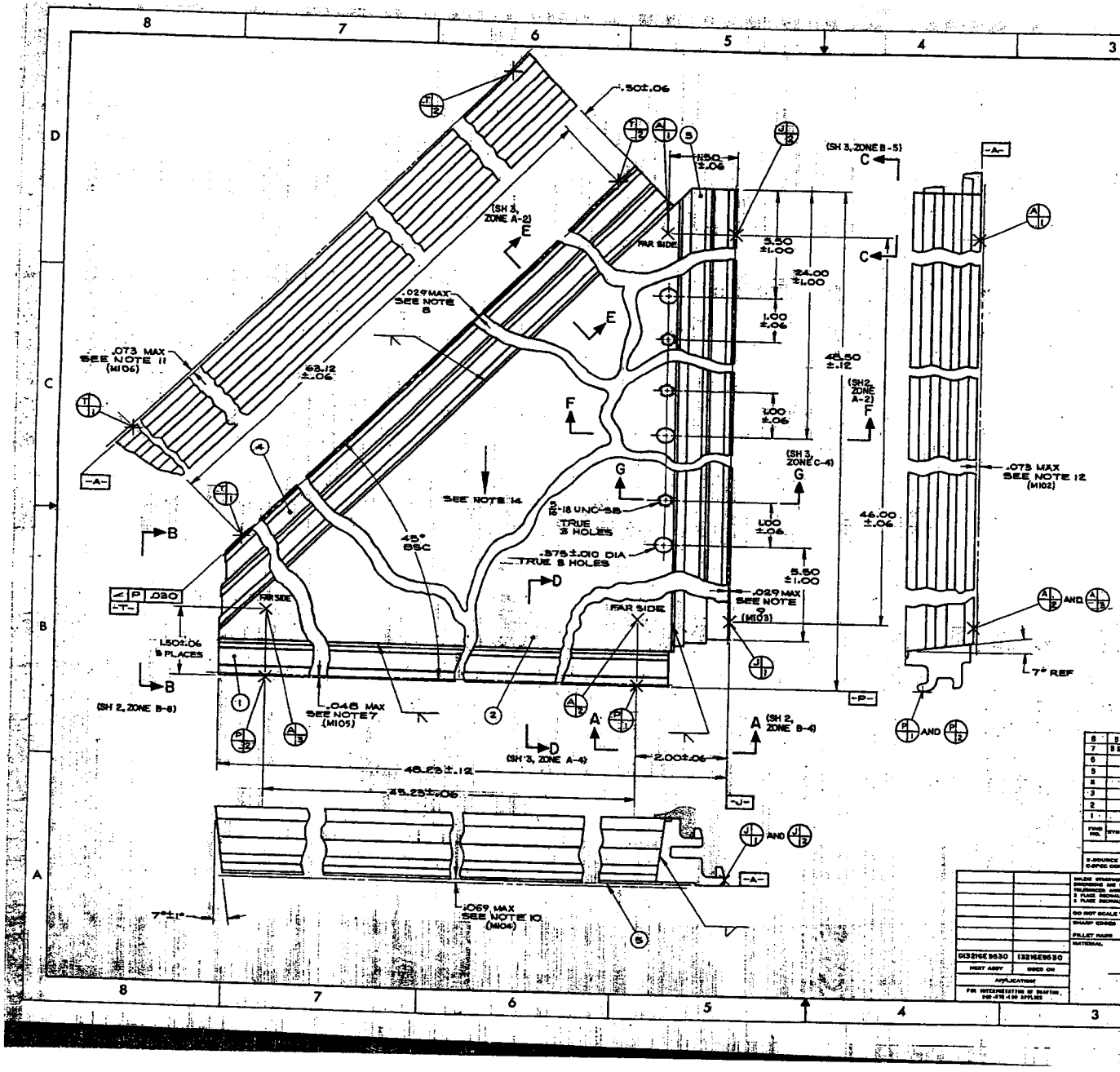

SHEETS 3	2	1	ZONE	LTR	STATUS OF REVISIONS — DESCRIPTION	DATE	APPROVED
A	A	A		A	SEE NOR.	26APR68	[illegible]
–	–	B		B	SEE NOR.	29JUN68	[illegible]
C	C	C		C	SEE NOR.	8JAN73	[illegible]
D	D	D		D	SEE ECP NO. 87HE3366RI	8JUN87	[illegible]

NOTES:

1. DATUM -A- IS A PLANE PASSING THRU DATUM POINTS A1, A2 AND A3.
2. DATUM -J- SHALL BE A PLANE PASSING THRU DATUM POINTS J1 AND J2 PERPENDICULAR TO DATUM -A-.
3. (M101) THE LINE THRU DATUM POINTS J1 AND J2 SHALL BE PERPENDICULAR TO DATUM -P- WITHIN .057 TOTAL.
4. DATUM -P- SHALL BE A PLANE PASSING THRU DATUM POINTS P1 AND P2 PERPENDICULAR TO DATUM -A-.
5. THE LINE THRU DATUM POINTS T1 AND T2 SHALL BE RELATED TO DATUM -P- AS DELINEATED ON DRAWING.
6. DATUM -T- SHALL BE A PLANE PASSING THRU DATUM POINTS T1 AND T2 AND PERPENDICULAR TO DATUM -A-.
7. FEATURE FIND NO. 1 MAY DEPART FROM DATUM PLANE -P- BETWEEN DATUM POINTS P1 AND P2 BY .048 AS DELINEATED ON THE DRAWING
8. FEATURE FIND NO. 4 MAY DEPART FROM DATUM PLANE -T- BETWEEN DATUM POINTS T1 AND T2 BY .029 AS DELINEATED ON DRAWING
9. FEATURE FIND NO. 3 MAY DEPART FROM DATUM PLANE -J- BETWEEN DATUM POINTS J1 AND J2 BY .029 AS DELINEATED ON DRAWING.
10. FEATURE FIND NO. 1 MUST BE PARALLEL TO DATUM -A- WITHIN .069 AS DELINEATED ON THE DRAWING.
11. FEATURE FIND NO. 4 MUST BE PARALLEL TO DATUM -A- WITHIN .073 AS DELINEATED ON THE DRAWING.
12. FEATURE FIND NO. 3 MUST BE PARALLEL TO DATUM -A- WITHIN .073 AS DELINEATED ON THE DRAWING.
13. BOND EXTENSIONS, FIND NO. 1, 3 AND 4 TO HONEYCOMB AND TOP AND BOTTOM SHEETS, FIND NO. 6, 2 AND 5, USING POTTING COMPOUND, FIND NO. 7. LANDING MAT SHALL INCLUDE PROVISION FOR INJECTION OF POTTING COMPOUND, FIND NO. 7 AND BLEED HOLES.
14. INDICATES DIRECTION OF HONEYCOMB CORE RIBBON.
15. UNLESS OTHERWISE SPECIFIED, TOLERANCES ON EXTRUDED SHAPES SHALL BE IN ACCORDANCE WITH ANS H35.2.

(NOTES CONTINUED ON SHEET 2)

FIND NO.	SYM	CODE IDENT	DWG SIZE	PART OR IDENTIFYING NO.	QTY REQD	NOMENCLATURE OR DESCRIPTION	SPECIFICATION	MATERIAL
8	8			TYPE I, CLASS 2	AR	ADHESIVE	MIL-A-25463	
7	9 S		B	13216E9540	AR	POTTING COMPOUND		
6				6.5-1/8-2N(5056)H	1	HONEYCOMB	MIL-C-7438	
5				ALY 6061-T6	1	SHEET, .063 STK	ASTM B209	AL ALY
4				ALY 6061-T6	1	EXTRUDED SHAPE	ASTM B221	AL ALY
3				ALY 6061-T6	1	EXTRUDED SHAPE	ASTM B221	AL ALY
2				ALY 6061-T6	1	SHEET, .063 STK	ASTM B209	AL ALY
1				ALY 6061-T6	1	EXTRUDED SHAPE	ASTM B221	AL ALY

LIST OF MATERIAL

F-SOURCE CONTROL DWG
C-SPEC CONTROL DWG
MANUFACTURE USE DWG
AR-AS REQUIRED
B-BULK MATERIAL

13216E9530	13216E9530
NEXT ASSY	USED ON
APPLICATION	

FOR INTERPRETATION OF DRAWING, DOD-STD-100 APPLIES

UNLESS OTHERWISE SPECIFIED DIMENSIONS ARE IN INCHES
TOLERANCES: ANGLES ± ——
2 PLACE DECIMALS ± ——
3 PLACE DECIMALS ± ——
DO NOT SCALE THIS DRAWING
SHARP EDGES .010 TO .015
FILLET RADII —— TO ——
MATERIAL

DRAWN VECO (CJS) DATE 18 NOV 67
SPEC [illegible] TIMMELS
DESIGN [illegible]
COMMODITY ENGINEER [illegible] 6/3/68
APPROVED FOR PRODUCTION [illegible]
CHIEF, PRODUCTION ENGINEERING
RELEASED FOR DOCUMENTATION [illegible]
CHIEF, ENGINEERING DEPT.
DATE 8 MAR 1968

U.S. ARMY MOBILITY EQUIPMENT COMMAND
ENGINEER RESEARCH AND DEVELOPMENT LABORATORIES, FORT BELVOIR, VA.

MAT, LANDING, REPAIR, UNDERLAP, MEDIUM DUTY

SIZE	CODE IDENT NO.	
D	97403	13216E9532

SCALE 1/1 SHEET 1 OF 3

13216E9532_97403_C_0001_0001_U_N_
February 21, 2008 12:42 AM

REVISIONS				
ZONE	LTR	DESCRIPTION	DATE	APPROVED
	A	SEE NOR.	26 APR 68	
	C	SEE NOR.	16 JAN 70	
	D	SEE ECP NO. 87H3366RI	8 JUN 87	

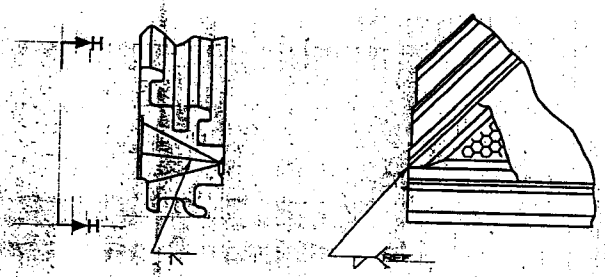

VIEW B-B
(SH 1, ZONE B-8)

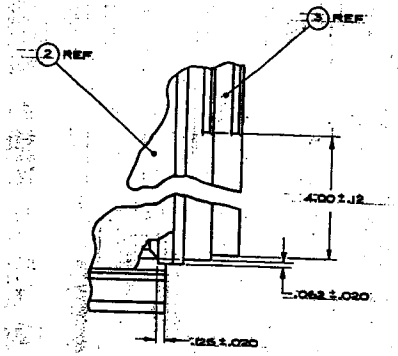

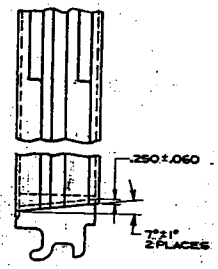

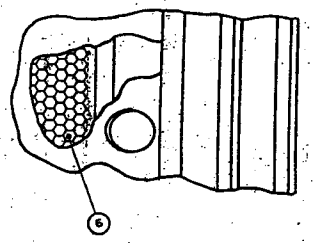

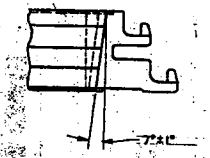

VIEW A-A
(SH 1, ZONE B-5)

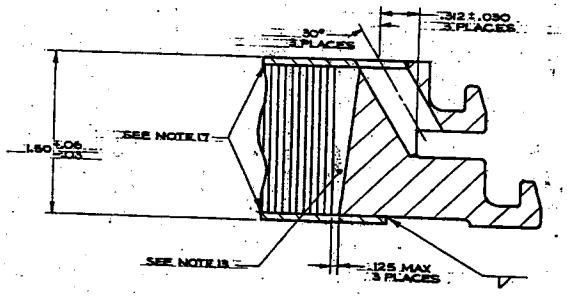

SECTION F-F
(SH 1, ZONE C-4)
SCALE 2/1

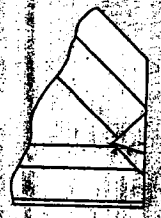

VIEW H-H

NOTES: (CONTINUED FROM SHEET 1)

16. WELDING, FINISHING, PAINTING, ADHESIVE AND BONDING SHALL BE IN ACCORDANCE WITH ESO ITEM SPECIFICATION.

17. BOND TOP AND BOTTOM SHEETS, FIND NO. 2 AND 5 TO HONEYCOMB, FIND NO. 6, USING ADHESIVE, FIND NO. 8.

18. FOR INTERPRETATION OF:
WELDING SYMBOLS, SEE ANSI/AWS A2.4;
SCREW THREAD STANDARDS SEE FED-STD-H28/2.

19. TIME DATUM TARGET SYMBOL ⊕ DESIGNATES A POINT OF CONTACT ON THE PART DATUM PLANE WITH GOVERNMENT FURNISHED INSPECTION EQUIPMENT.

20. QUALITY ASSURANCE PROVISIONS:
THESE REQUIREMENTS APPLY WHEN THIS PART IS PROCURED AS A REPAIR PART.
A. SAMPLING FOR INSPECTION SHALL BE MADE IN ACCORDANCE WITH MIL-STD-105.
B. CLASSIFICATION OF CHARACTERISTICS:
CRITICAL NONE
MAJOR AQL = 1.0 PCT
MINOR AQL = 2.5 PCT
C. GOVERNMENT INSPECTION EQUIPMENT
D. SPECIAL ATTRIBUTES (FOR CHARACTERISTICS NOT CLASSIFIED ABOVE)

UNLESS OTHERWISE SPECIFIED DIMENSIONS ARE IN INCHES 2 PLACE DECIMALS ± 3 PLACE DECIMALS ±	DRAWN VECO (CJS)	DATE 16 NOV 67	U.S. ARMY MOBILITY EQUIPMENT COMMAND ENGINEER RESEARCH AND DEVELOPMENT LABORATORIES, FORT BELVOIR, VA.		
DO NOT SCALE THIS DRAWING	SHARP CORNERS TO			MAT, LANDING, REPAIR, UNDERLAP, MEDIUM DUTY	
	FILLET RADIUS TO				
	MATERIAL				
SHEET ASSY / MODEL NO					
APPLICATION					
FOR INTERPRETATION OF MARKING, SEE TOPO-STD-000 (APPENDIX)			SIZE D	CODE IDENT NO. 97403	13216E9532
			SCALE		SHEET 2

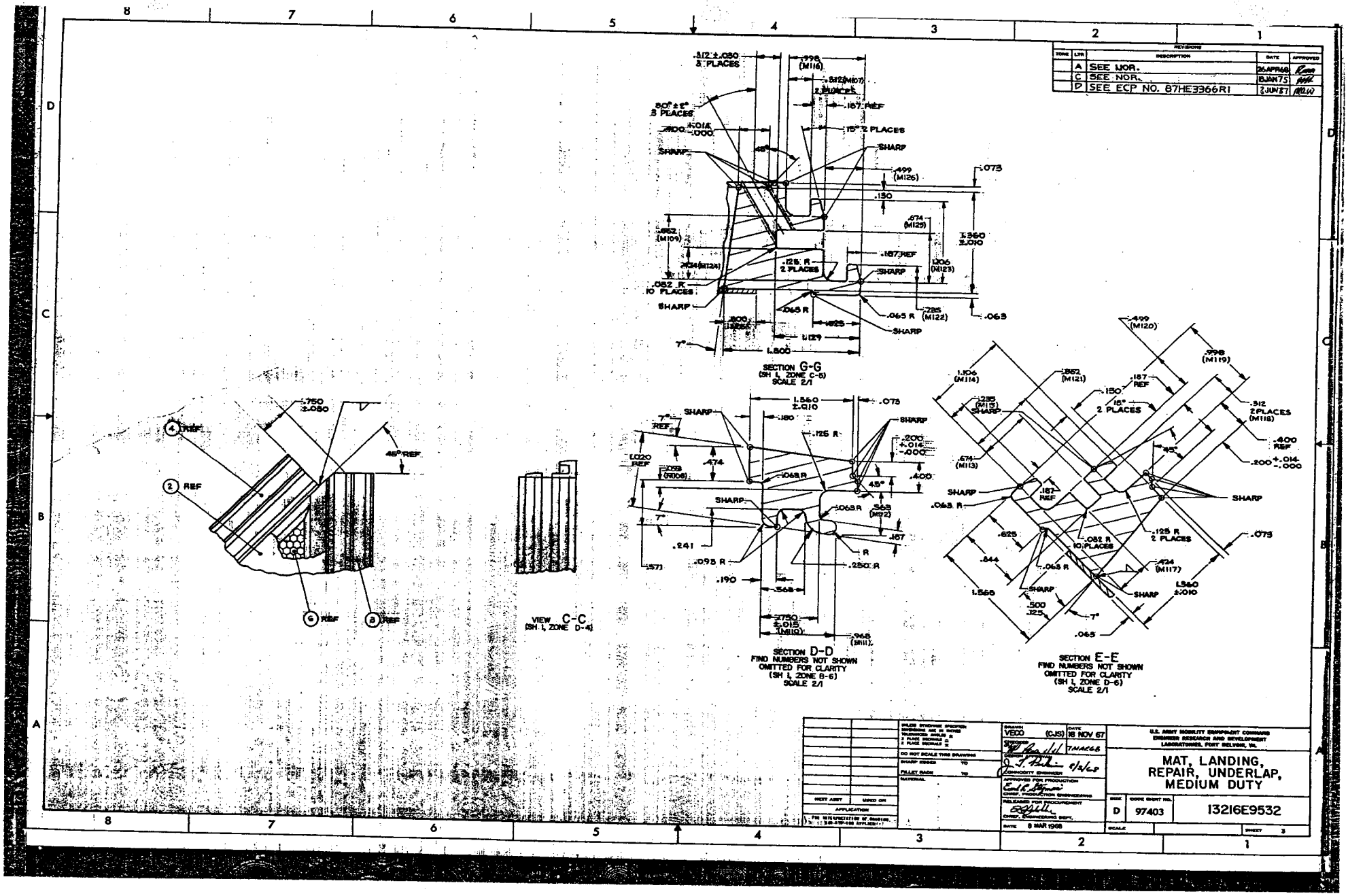

REVISIONS
ZONE | LTR | DESCRIPTION | DATE | APPROVED
A | SEE NOR. | 26APR68
C | SEE NOR. | 18JAN75
D | SEE ECP NO. 87HE3366R1 | 2JUN87
SECTION G-G
(SH 1, ZONE C-5)
SCALE 2/1
SECTION D-D
FIND NUMBERS NOT SHOWN
OMITTED FOR CLARITY
(SH 1, ZONE B-6)
SCALE 2/1
SECTION E-E
FIND NUMBERS NOT SHOWN
OMITTED FOR CLARITY
(SH 1, ZONE D-6)
SCALE 2/1
VIEW C-C
(SH 1, ZONE D-4)
DRAWN VECO (CJS) DATE 18 NOV 67
U.S. ARMY MOBILITY EQUIPMENT COMMAND
ENGINEER RESEARCH AND DEVELOPMENT
LABORATORIES, FORT BELVOIR, VA.
MAT, LANDING,
REPAIR, UNDERLAP,
MEDIUM DUTY
D 97403 13216E9532
DATE 8 MAR 1968
SHEET 3

APPROVED SOURCE OF SUPPLY	
VENDOR PART NO.	VENDOR
KLMS-1107	KAISER ALUMINUM AND CHEMICAL SALES, INC 300 LAKESIDE DRIVE OAKLAND, CALIFORNIA 94604

REVISIONS				
ZONE	LTR	DESCRIPTION	DATE	APPROVED
	A	SEE NOR	25 JUN 68	
	B	SEE ECP NO. 87HE3366R1	8 JUN 87	

REQUIREMENTS:

1. THE POTTING COMPOUND SHALL CONSIST OF TWO COMPONENTS OF EPOXY RESIN, A LIQUID ADHESIVE BASE WITH A DENSITY OF 13.4±.3 LB/GAL AND A LIQUID HARDENER WITH A DENSITY OF 12.0±.3 LB/GAL. FILLERS (IF USED) IN THE RESIN SHALL BE READILY DISPERSIBLE.
2. THE ADHESIVE BASE AND HARDENER SHALL MIX READILY TO A SMOOTH SOLUTION SUITABLE FOR PRESSURE GUN INJECTION APPLICATION AND SHALL BE FREE OF LUMPS. RATIO OF HARDENER TO ADHESIVE BASE SHALL BE ONE (1) PART HARDENER TO 4.0±.5 OF BASE BY VOLUME.
3. THE ADHESIVE BASE AND HARDENER SHALL RETAIN THEIR CAPABILITIES FOR A MINIMUM OF SIX (6) MONTHS AT A MINIMUM TEMPERATURE OF 90°F.
4. THE POTTING COMPOUND SHALL BE CAPABLE OF BONDING WITHOUT PRESSURE 6061-T6 ALUMINUM ALLOY PANEL EDGES TO 5056-H39 ALUMINUM ALLOY HONEYCOMB CORE. THE POTTED ASSEMBLY SHALL BE CAPABLE OF WITHSTANDING EXPOSURE TO TEMPERATURE FROM MINUS 40°F TO PLUS 180°F AND HAVE A MINIMUM SHEAR STRENGTH OF 1000 PSI AT MINUS 40°F AND 1800 PSI AT PLUS 180°F.
5. THE POTTING COMPOUND SHALL NOT BE CORROSIVE TO ALUMINUM ALLOYS.
6. THE POTTING COMPOUND SHALL BE CAPABLE OF BEING READILY APPLIED TO TREATED METAL SURFACES AT A TEMPERATURE BETWEEN 60°F AND 200°F.
7. THE POTTING COMPOUND SHALL HAVE A MINIMUM POT LIFE OF 5 MINUTES AT 115°F FOR A 20 GRAM MASS .25 THICK.
8. THE POTTING COMPOUND SHALL HAVE A MAXIMUM GEL TIME OF 15 MINUTES AT 160°F FOR A 20 GRAM MASS .25 THICK.
9. ONLY THE ITEM DESCRIBED ON THIS DRAWING WHEN PROCURED FROM THE VENDOR LISTED HEREON IS APPROVED BY USAMERDC FOR USE AS A POTTING COMPOUND. A SUBSTITUTE ITEM SHALL NOT BE USED WITHOUT PRIOR TESTING AND APPROVAL BY USAMERDC.

SOURCE CONTROL DRAWING

D13216E9532	13216E9530
D13216E9531	13216E9530
D13216E9529	13216E9529
D13216E9528	13216E9528
NEXT ASSY	USED ON
APPLICATION	
FOR INTERPRETATION OF DRAWING, DOD-STD-100 APPLIES.	

UNLESS OTHERWISE SPECIFIED: DIMENSIONS ARE IN INCHES
TOLERANCES: ANGLES ± —
3 PLACE DECIMALS ± —
2 PLACE DECIMALS ± —
DO NOT SCALE THIS DRAWING
FILLET RADII — TO —
SHARP EDGES — TO —
MATERIAL: —

DRAWN VECO (LMG) DATE 22 APR 68
CHECKED 26 APR 68
DESIGN APPROVAL
COMMODITY ENGINEER
APPROVED FOR PRODUCTION Earl R. Stillman
CHIEF PRODUCTION ENGINEER
RELEASED FOR PROCUREMENT
CHIEF, ENGINEERING DEPT.

U.S. ARMY MOBILITY EQUIPMENT COMMAND
ENGINEER RESEARCH AND DEVELOPMENT LABORATORIES, FORT BELVOIR, VA.

POTTING COMPOUND

SIZE	CODE IDENT NO.	
B	97403	13216E9540
DATE 8 MAR 1968	SCALE NONE	SHEET 1 OF 1

Aerospace Industries Association

NATIONAL AEROSPACE STANDARD

© COPYRIGHT 1998 AEROSPACE INDUSTRIES ASSOCIATION OF AMERICA, INC. ALL RIGHTS RESERVED

FED SUP CLASS
5305

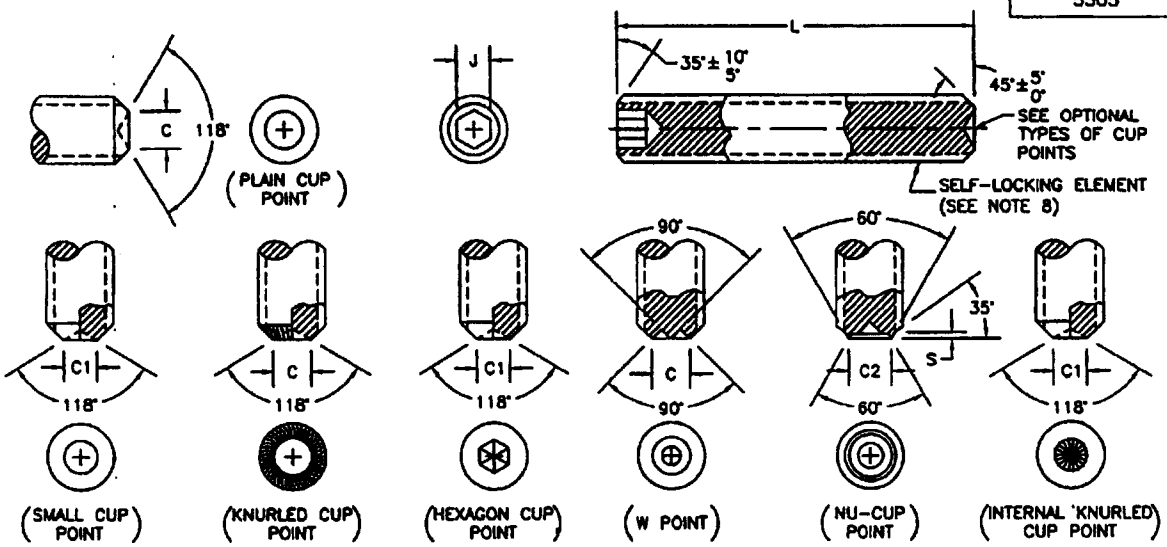

TABLE I

NOMINAL SIZE		.086	.112	.136	.164	.190	.250	.3125	.375	.500
THREADS PER INCH (UNC-3A)		56	40	32	32	24	20	18	16	13
J SOCKET WIDTH ACROSS FLATS NOM		.035	.050	.062	.078	.094	.125	.156	.188	.250
C POINT DIAMETER	MAX	.047	.061	.074	.087	.102	.132	.172	.212	.291
	MIN	.039	.051	.064	.076	.088	.118	.156	.194	.270
C1 POINT DIAMETER	MAX	.043	.056	.069	.082	.095	.125	.156	.187	.250
	MIN	.038	.051	.062	.074	.086	.114	.144	.174	.235
C2 POINT DIAMETER	MAX	.043	.059	.074	.090	.101	.156	.190	.241	.333
	MIN	.038	.054	.068	.084	.095	.150	.185	.236	.328
S POINT LENGTH	MAX	.010	.013	.017	.021	.024	.027	.038	.041	.054
	MIN	.007	.008	.012	.016	.019	.022	.033	.036	.049

L LENGTH	TOL	DASH NUMBER											
		PLAIN	PLAIN	SELF LOCKING	PLAIN	SELF LOCKING	PLAIN	SELF LOCKING	PLAIN	PLAIN	PLAIN	PLAIN	PLAIN
.125	±.010	1	9	101	21	111		131					
.188		2	10	102	22	112	31	132	42	55			
.250		3	11	103	23	113	32	133	43	56	68		
.312			12	104	24	114	33	134	44	57	69	80	
.375			13	105	25	115	34	135	45	58	70	81	91
.438			14	106		116		136					
.500			15	107		117	36	137	47	60	72	83	93
.562				108		118		138					
.625				109		119		139	48	61	73	84	94
.750	±.020					120		140	49	62	74	85	95
.875						121		141					
1.000								142		63	75	86	96

LIST OF CURRENT SHEETS	
NO.	REV
1	NEW
2	NEW

THE INITIAL RELEASE OF THIS DOCUMENT SUPERSEDES MS51021, REVISION C. PART NUMBERS REMAIN MS51021.

CUSTODIAN NATIONAL AEROSPACE STANDARDS COMMITTEE

THIRD ANGLE PROJECTION

PROCUREMENT SPECIFICATION
FF-S-200

TITLE
SETSCREW-HEXAGON SOCKET, CUP POINT, CORROSION-RESISTING STEEL, PASSIVATED, UNC-3A, PLAIN AND SELF-LOCKING

CLASSIFICATION
PART STANDARD

NASM51021
SHEET 1 OF 2

AEROSPACE INDUSTRIES ASSOCIATION OF AMERICA, INC.
1250 EYE STREET, N.W.
WASHINGTON, D.C. 20005

THIS DRAWING SUPERSEDES ALL ANTECEDENT STANDARD DRAWINGS FOR THE SAME PRODUCT AND SHALL BECOME EFFECTIVE NO LATER THAN SIX MONTHS FROM THE LAST DATE OF APPROVAL SHOWN HEREON.

APPROVAL DATE AUGUST 1998 REVISION

USE OF OR RELIANCE UPON THIS DOCUMENT OR ANY NATIONAL AEROSPACE STANDARD IS ENTIRELY VOLUNTARY. AIA DOES NOT QUALIFY SUPPLIERS OR CERTIFY CONFORMANCE OF ITEMS PROCURED UNDER NATIONAL AEROSPACE STANDARDS. AIA MAKES NO REPRESENTATION OR CLAIM RESPECTING (1) THE SUITABILITY OF ITEMS FOR ANY PARTICULAR APPLICATION, OR (2) THE EXISTENCE OF OR APPLICABILITY THERETO OF PATENT OR TRADEMARK RIGHTS.

COPYRIGHT 2003; Aerospace Industries Association of America, Inc. (AIA/NAS)

Document provided by IHS Licensee=Rock Island Arsenal/9983967100, User=, 03/25/2003 10:01:41 MST Questions or comments about this message: please call the Document Policy Management Group at 1-800-451-1584.

Aerospace Industries Association

NATIONAL AEROSPACE STANDARD

© COPYRIGHT 1998 AEROSPACE INDUSTRIES ASSOCIATION OF AMERICA, INC. ALL RIGHTS RESERVED

AEROSPACE INDUSTRIES ASSOCIATION OF AMERICA, INC.
1250 EYE STREET, N.W.
WASHINGTON, D.C. 20005

NOTES:

1. MATERIAL: CORROSION-RESISTING STEEL, 300 SERIES, IN ACCORDANCE WITH PROCUREMENT SPECIFICATION.
2. PROTECTIVE COATING: PASSIVATED IN ACCORDANCE WITH QQ-P-35.
3. THREADS: THE THREADS SHALL BE IN ACCORDANCE WITH MIL-S-7742.
4. MAGNETIC PERMEABILITY: THESE SETSCREWS HAVE A MAGNETIC PERMEABILITY OF 2.0 MAX (AIR = 1.0) FOR A FIELD STRENGTH OF H = 200 OERSTEDS, WHEN USING A MAGNETIC INDICATOR PER MIL-I-17214.
5. DIMENSIONS: ALL DIMENSION ARE IN INCHES, UNLESS OTHERWISE SPECIFIED.
6. TOLERANCES: ANGLES ±5°, UNLESS OTHERWISE SPECIFIED.
7. PART NUMBER: THE MS PART NUMBER CONSISTS OF THE MS NUMBER, PLUS THE DASH NUMBER. EXAMPLE: MS51021-1.
8. SELF-LOCKING ELEMENT:
   (a) THE SELF-LOCKING ELEMENT SHALL BE IN ACCORDANCE WITH MIL-F-18240.
   (b) FOR DESIGN AND USAGE LIMITATIONS, SEE MS15981.
   (c) LOCATION OF EFFECTIVE LOCKING AREA SHALL BE IN ACCORDANCE WITH MS15981.
   (d) MAXIMUM RING GAGE DIAMETER THAT LOCKING REGION OF SETSCREW MUST PASS THRU FREELY OR WITH FINGER PRESSURE SHALL BE THE NOMINAL SIZE PLUS 0.010.
   (e) MIL-F-18240 DOESN'T ESTABLISH TORQUE REQUIREMENTS FOR LENGTHS ABOVE THE DASHED LINE. ONLY A POSITIVE INDICATION OF TORQUE IS REQUIRED.
9. REFERENCED DOCUMENTS SHALL BE OF THE ISSUE IN EFFECT ON DATE OF INVITATIONS FOR BID.
10. FOR DESIGN FEATURE PURPOSES, THIS STANDARD TAKES PRECEDENCE OVER PROCUREMENT DOCUMENTS REFERENCED HEREIN.

INTERCHANGEABILITY

SCREWS COVERED BY THE DASH NUMBERS GIVEN IN MS51022 ARE CANCELLED AFTER 29 JANUARY 1964 AND SUPERSEDED BY THE SCREWS COVERED ON MS51021 HAVING THE SAME DASH NUMBERS. CANCELLED SCREWS MAY BE USED UNTIL EXISTING STOCKS ARE DEPLETED. USE ONLY MS51021 SCREWS FOR NEW DESIGN.

SCREWS COVERED BY THE DASH NUMBERS GIVEN IN MS18064 IN PART ARE CANCELLED. CANCELLED SCREWS MAY BE USED UNTIL EXISTING STOCKS ARE DEPLETED. USE ONLY THE SUPERSEDING SCREWS FOR NEW DESIGN. REPLACEMENT SHALL BE IN ACCORDANCE WITH TABLE II.

TABLE II

CANCELLED	SUPERSEDING	CANCELLED	SUPERSEDING	CANCELLED	SUPERSEDING	CANCELLED	SUPERSEDING
MS18064	MS51021	MS18064	MS51021	MS18064	MS51021	MS18064	MS51021
DASH NUMBER		DASH NUMBER		DASH NUMBER		DASH NUMBER	
1	101	46	109	42	118	24	135
5	102	2	111	47	119	30	136
10	103	6	112	54	120	35	137
16	104	11	113	61	121	43	138
22	105	17	114	3	131	48	139
89	106	23	115	7	132	55	140
33	107	90	116	12	133	62	141
41	108	34	117	18	134	67	142

THIS DRAWING SUPERSEDES ALL ANTECEDENT STANDARD DRAWINGS FOR THE SAME PRODUCT AND SHALL BECOME EFFECTIVE NO LATER THAN SIX MONTHS FROM THE LAST DATE OF APPROVAL SHOWN HEREON.

APPROVAL DATE AUGUST 1998 REVISION

USE OF OR RELIANCE UPON THIS DOCUMENT OR ANY NATIONAL AEROSPACE STANDARD IS ENTIRELY VOLUNTARY. AIA DOES NOT QUALIFY SUPPLIERS OR CERTIFY CONFORMANCE OF ITEMS PROCURED UNDER NATIONAL AEROSPACE STANDARDS. AIA MAKES NO REPRESENTATION OR CLAIM RESPECTING (1) THE SUITABILITY OF ITEMS FOR ANY PARTICULAR APPLICATION, OR (2) THE EXISTENCE OF OR APPLICABILITY THERETO OF PATENT OR TRADEMARK RIGHTS.

COPYRIGHT 2003; Aerospace Industries Association of America, Inc. (AIA/NAS)

Document provided by IHS Licensee=Rock Island Arsenal/9983967100, User=, 03/25/2003 10:01:41 MST Questions or comments about this message: please call the Document Policy Management Group at 1-800-451-1584.

13216E9535_97403_-D_0001_0001_U_N_
February 21, 2000 12:48 AM

ZONE	LTR	DESCRIPTION	DATE	APPROVED
	A	SEE NOR.	26 APR 68	[illegible]
	B	SEE NOR	19 JAN 73	[illegible]
	C	SEE NOR.	18 JAN 75	[illegible]
	D	SEE ECP NO. 87HE3366R1	18 JUN 87	[illegible]

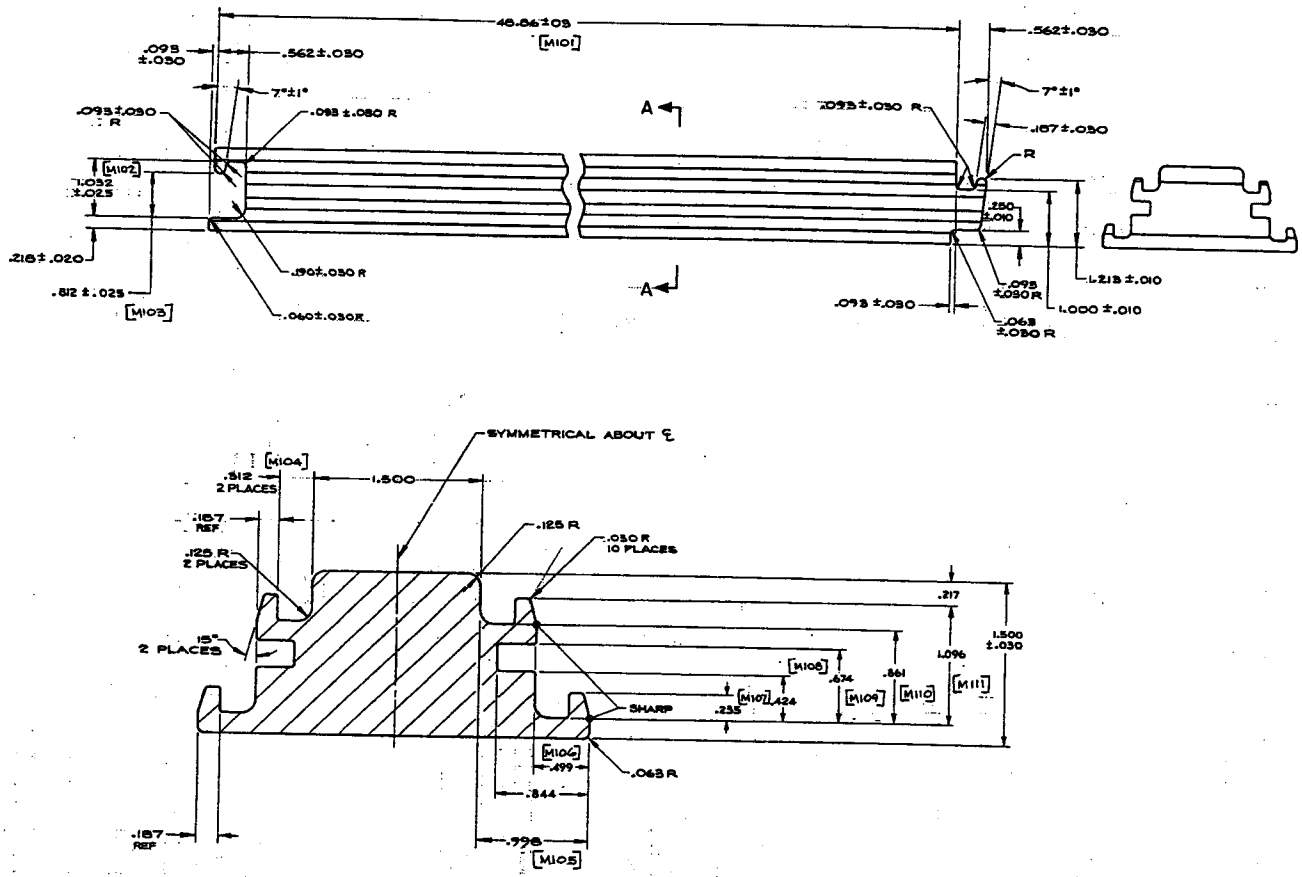

SECTION A-A
SCALE 2/1

NOTES:

1. UNLESS OTHERWISE SPECIFIED, TOLERANCES ON EXTRUDED SHAPES SHALL BE IN ACCORDANCE WITH ANS H35.2
2. FINISHING, PAINTING AND MARKING SHALL BE IN ACCORDANCE WITH MIL-M-52612 (ME)
3. QUALITY ASSURANCE PROVISIONS:
   THESE REQUIREMENTS APPLY WHEN THIS PART IS PROCURED AS A REPAIR PART.
   A. SAMPLING FOR INSPECTION SHALL BE IN ACCORDANCE WITH MIL-STD-105.
   B. CLASSIFICATION OF CHARACTERISTICS:
      CRITICAL: NONE
      MAJOR AQL 1.0 %
      M101-111

NEXT ASSY	USED ON
APPLICATION	
FOR INTERPRETATION OF DIMENSIONS AND TOLERANCES, SEE 8-STD-100	

UNLESS OTHERWISE SPECIFIED DIMENSIONS ARE IN INCHES
TOLERANCES ANGLES ±
2 PLACE DECIMALS ±
3 PLACE DECIMALS ±

DO NOT SCALE THIS DRAWING
SHARP EDGES .010 TO .015
FILLET RADII — TO —
MATERIAL
AL ALY 6061-T6 ASTM B221

DRAWN VECO (CJS) DATE 14 NOV 67
CHECKED [illegible] 7 MAR 68
DESIGN APPROVAL [illegible] 8/3/68
COMMODITY ENGINEER
APPROVED FOR PRODUCTION [illegible]
CHIEF, PRODUCTION ENGINEERING
RELEASED FOR PROCUREMENT [illegible]
CHIEF, ENGINEERING DEPT.
DATE 8 MAR 1968

U.S. ARMY MOBILITY EQUIPMENT COMMAND
ENGINEER RESEARCH AND DEVELOPMENT LABORATORIES, FORT BELVOIR, VA.

STARTING CONNECTOR, 48.86 INCH

SIZE D | CODE IDENT NO. 97403 | 13216E9535
SCALE 1/1 | SHEET 1 OF 1

JL-DM-16

REVISIONS				
ZONE	LTR	DESCRIPTION	DATE	APPROVED
	A	SEE NOR.	26APR68	
	B	SEE NOR.	18JAN75	
	C	SEE ECP NO. 87HE3366R1	8 JUN87	

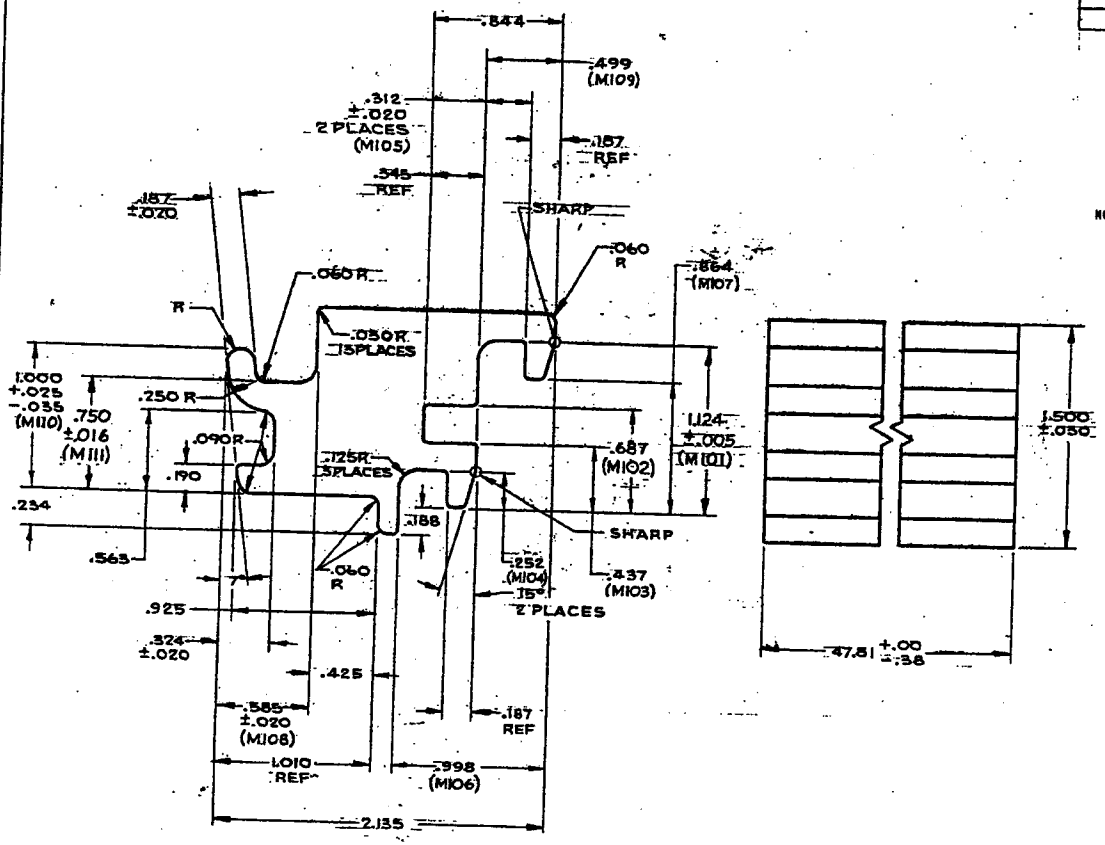

NOTES:

1. UNLESS OTHERWISE SPECIFIED, ALL TOLERANCES ON EXTRUDED SHAPES SHALL BE IN ACCORDANCE WITH ANS H35.2.
2. MARK PART IN ACCORDANCE WITH END ITEM SPECIFICATION.
3. QUALITY ASSURANCE PROVISIONS:
   THESE REQUIREMENTS APPLY WHEN THIS PART IS PROCURED AS A REPAIR PART.
   A. SAMPLING FOR INSPECTION SHALL BE IN ACCORDANCE WITH MIL-STD-105.
   B. CLASSIFICATION OF CHARACTERISTICS:
      CRITICAL: NONE
      MAJOR AQL 1.0%
      M101-111
   C. GOVERNMENT INSPECTION EQUIPMENT DESIGN EXISTS FOR CHARACTERISTICS M101 THROUGH 111.

NEXT ASSY	USED ON
APPLICATION	

FOR INTERPRETATION OF DRAWING DOD-STD-100 APPLIES

UNLESS OTHERWISE SPECIFIED: DIMENSIONS ARE IN INCHES
TOLERANCES ANGLES ± ——
3 PLACE DECIMALS ± ——
2 PLACE DECIMALS ± ——

DO NOT SCALE THIS DRAWING

SHARP EDGES .010 TO .020

FILLET RADII —— TO ——

MATERIAL

AL ALY
6061-T6
ASTM B221

DRAWN VECO (CJS)	DATE 14 NOV 67	
CHECKED	19FEB68	
DESIGN APPROVAL COMMODITY ENGINEER	2/3/68	
APPROVED FOR PRODUCTION CHIEF, PRODUCTION ENGINEERING		
RELEASED FOR PROCUREMENT CHIEF, ENGINEERING DEPT.		
DATE 8 MAR 1968		

U.S. ARMY MOBILITY EQUIPMENT COMMAND
ENGINEER RESEARCH AND DEVELOPMENT LABORATORIES, FORT BELVOIR, VA.

TURN ADAPTER-MALE /OVERLAP

SIZE	CODE IDENT NO.	
C	97403	13216E9215

SCALE 2/1 SHEET 1 OF 1

REVISIONS				
ZONE	LTR	DESCRIPTION	DATE	APPROVED
	A	SEE NOR.	26APR68	
	B	SEE NOR.	18JAN75	
	C	SEE ECP NO. 87HE3366RI	8 JUN87	

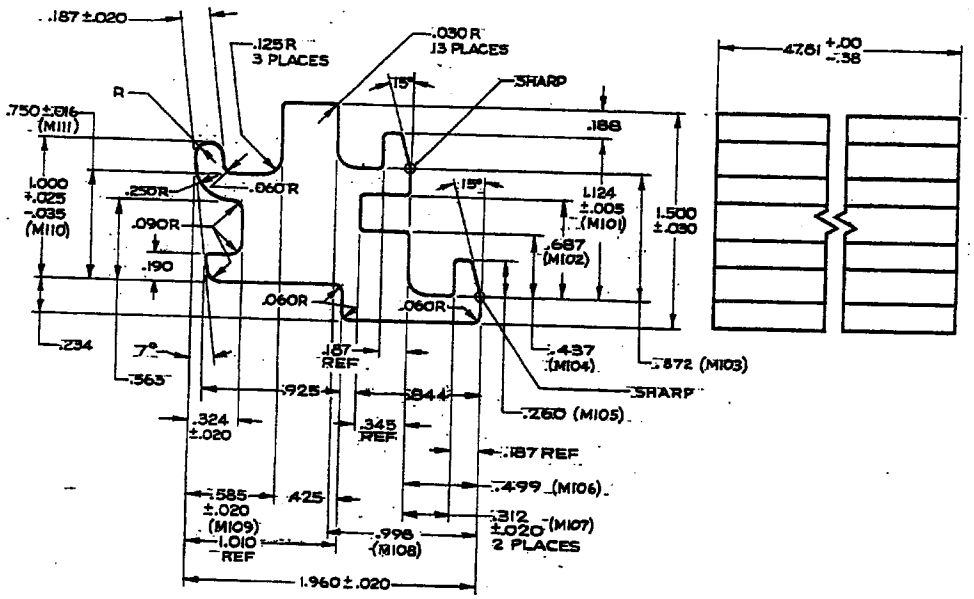

NOTES:

1. UNLESS OTHERWISE SPECIFIED, TOLERANCES ON EXTRUDED SHAPES SHALL BE IN ACCORDANCE WITH ANS H35.2.
2. MARK PARTS IN ACCORDANCE WITH END ITEM SPECIFICATION)
3. QUALITY ASSURANCE PROVISIONS:
   THESE REQUIREMENTS APPLY WHEN THIS PART IS PROCURED AS A REPAIR PART.
   A. SAMPLING FOR INSPECTION SHALL BE IN ACCORDANCE WITH MIL-STD-105.
   B. CLASSIFICATION OF CHARACTERISTICS:
      CRITICAL: NONE
      MAJOR AQL 1.0%
      M101-111
   C. GOVERNMENT INSPECTION EQUIPMENT DESIGN EXISTS FOR CHARACTERISTICS M101 THROUGH 111.

NEXT ASSY	USED ON
APPLICATION	
FOR INTERPRETATION OF DRAWING SEE MIL-STD-100 AS APPLIES	

UNLESS OTHERWISE SPECIFIED DIMENSIONS ARE IN INCHES
TOLERANCES, ANGLES ±
3 PLACE DECIMALS ±
2 PLACE DECIMALS ±

DO NOT SCALE THIS DRAWING

SHARP EDGES .010 TO .020

FILLET RADII — TO —

MATERIAL: AL ALY 6061-T6 ASTM B221

DRAWN: VECO (CJS) DATE: 14 NOV 67

CHECKED: RCB. 19FEB68

DESIGN APPROVAL: COMMODITY ENGINEER 2/2/68

APPROVED FOR PRODUCTION: CHIEF, PRODUCTION ENGINEERING

RELEASED FOR PROCUREMENT: CHIEF, ENGINEERING DEPT.

DATE: 8 MAR 1968

U.S. ARMY MOBILITY EQUIPMENT COMMAND
ENGINEER RESEARCH AND DEVELOPMENT LABORATORIES, FORT BELVOIR, VA.

TURN ADAPTER-MALE/UNDERLAP

SIZE	CODE IDENT NO.	
C	97403	13216E9216

SCALE 2/1 SHEET 1 OF 1

ZONE	LTR	REVISIONS DESCRIPTION	DATE	APPROVED
	A	SEE NOR.	26 APR 68	[illegible]
	B	SEE NOR.	18 JAN 75	[illegible]
	C	SEE ECP NO. 87HE3366R1	8 JUN 87	[illegible]

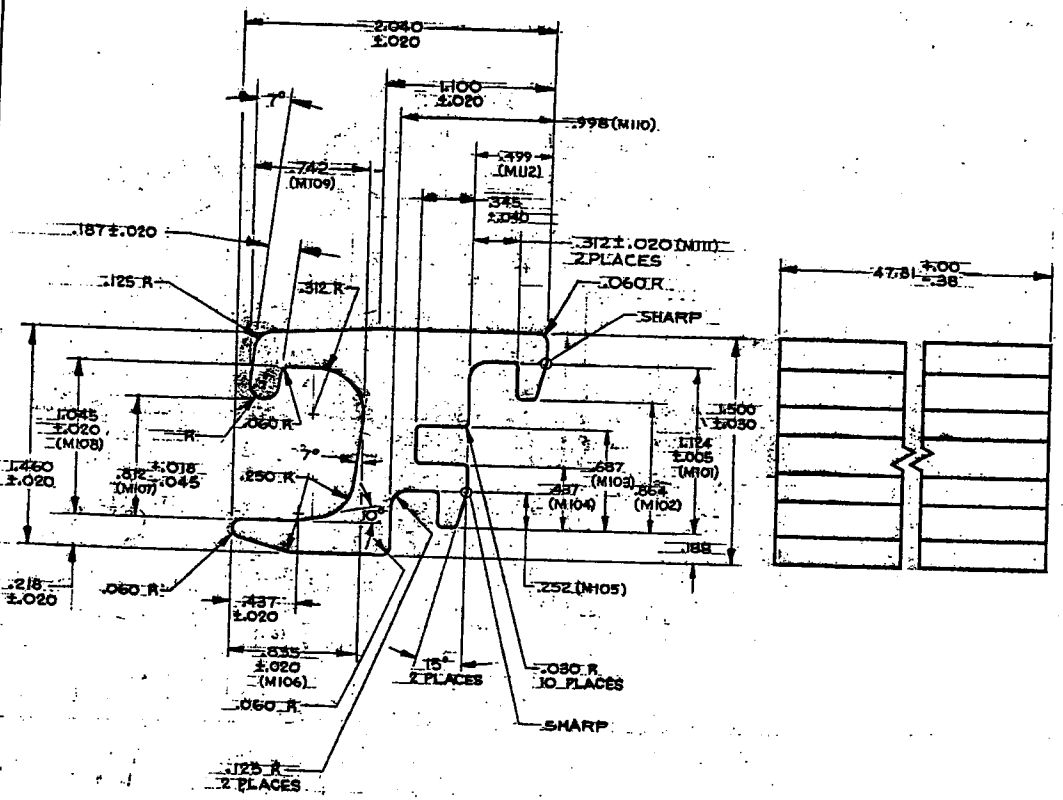

NOTES:

1. UNLESS OTHERWISE SPECIFIED, TOLERANCES ON EXTRUDED SHAPES SHALL BE IN ACCORDANCE WITH ANS H35.2.
2. MARK PARTS IN ACCORDANCE WITH END ITEM SPECIFICATION
3. QUALITY ASSURANCE PROVISIONS: THESE REQUIREMENTS APPLY WHEN THIS PART IS PROCURED AS A REPAIR PART.
   A. SAMPLING FOR INSPECTION SHALL BE IN ACCORDANCE WITH MIL-STD-105.
   B. CLASSIFICATION OF CHARACTERISTICS:
      CRITICAL: NONE
      MAJOR AQL 1.0%
      M101-112
   C. GOVERNMENT INSPECTION EQUIPMENT DESIGN EXISTS FOR CHARACTERISTICS M101 THROUGH 112.

NEXT ASSY	USED ON
APPLICATION	
FOR INTERPRETATION OF DRAWING MIL-STD-100 APPLIES	

UNLESS OTHERWISE SPECIFIED: DIMENSIONS ARE IN INCHES. TOLERANCES: ANGLES ±; 3 PLACE DECIMALS ±; 2 PLACE DECIMALS ±

DO NOT SCALE THIS DRAWING

SHARP EDGES .010 TO .020

FILLET RADII — TO —

MATERIAL: AL ALY 6061-T6 ASTM B221

DRAWN: VECO (CJS) — DATE: 13 NOV 67

CHECKED: PROD — 19 FEB 68

DESIGN APPROVAL: J. T. Perkins — COMMODITY ENGINEER — 8/3/68

APPROVED FOR PRODUCTION: Earl R. Stegman — CHIEF, PRODUCTION ENGINEERING

RELEASED FOR PROCUREMENT: [illegible] — CHIEF, ENGINEERING DEPT.

DATE: 8 MAR 1968

U.S. ARMY MOBILITY EQUIPMENT COMMAND
ENGINEER RESEARCH AND DEVELOPMENT LABORATORIES, FORT BELVOIR, VA.

TURN ADAPTER-FEMALE / OVERLAP

SIZE	CODE IDENT NO.	
C	97403	13216E9217

SCALE 2/1 — SHEET 1 OF 1

U-10020-1

REVISIONS				
ZONE	LTR	DESCRIPTION	DATE	APPROVED
	A	SEE NOR.	26 APR 68	
	B	SEE NOR.	18 JAN 75	
	C	SEE ECP NO. 87HE3366R1.	8 JUN 87	

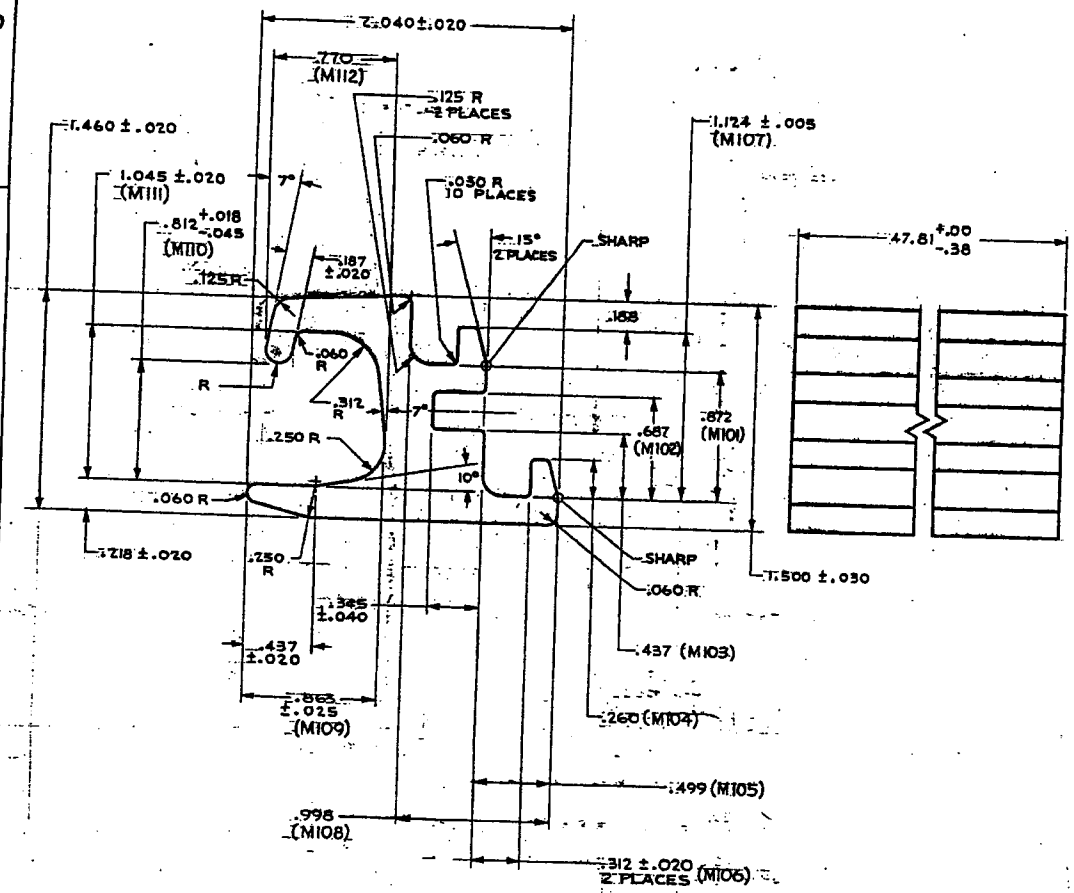

NOTES:

1. UNLESS OTHERWISE SPECIFIED, ALL TOLERANCES ON EXTRUDED SHAPES SHALL BE IN ACCORDANCE WITH ANS H35.2.
2. MARK PARTS IN ACCORDANCE WITH END ITEM SPECIFICATION.
3. QUALITY ASSURANCE PROVISIONS: THESE REQUIREMENTS APPLY WHEN THIS PART IS PROCURED AS A REPAIR PART.
   A. SAMPLING-FOR INSPECTION SHALL BE IN ACCORDANCE WITH MIL-STD-105.
   B. CLASSIFICATION OF CHARACTERISTICS:
      CRITICAL: NONE
      MAJOR AQL 1.0%
      M101-112
   C. GOVERNMENT INSPECTION EQUIPMENT DESIGN EXISTS FOR CHARACTERISTICS M101 THROUGH 112.

NEXT ASSY	USED ON
APPLICATION	

UNLESS OTHERWISE SPECIFIED: DIMENSIONS ARE IN INCHES; TOLERANCES: ANGLES ±—, 3 PLACE DECIMALS ±.—, 2 PLACE DECIMALS ±.—

DO NOT SCALE THIS DRAWING

SHARP EDGES .010 TO .020

FILLET RADII — TO —

MATERIAL: AL ALY 6061-T6 ASTM B221

DRAWN VECO (CJS) DATE 13 NOV 67

CHECKED 19 FEB 68

DESIGN APPROVAL 8/2/68

COMMODITY ENGINEER

APPROVED FOR PRODUCTION

CHIEF, PRODUCTION ENGINEERING

RELEASED FOR PROCUREMENT

CHIEF, ENGINEERING DEPT.

DATE 8 MAR 1968

U.S. ARMY MOBILITY EQUIPMENT COMMAND
ENGINEER RESEARCH AND DEVELOPMENT
LABORATORIES, FORT BELVOIR, VA.

TURN ADAPTER-FEMALE / UNDERLAP

SIZE	CODE IDENT NO.	
C	97403	13216E9218

SCALE 2 / 1 SHEET 1 OF 1

B-100307

ZONE	LTR	REVISIONS DESCRIPTION	DATE	APPROVED
	B	SEE NOR.	26 APR 68	[illegible]
	C	SEE NOR	30 NOV 72	[illegible]
	D	SEE NOR.	18 JAN 75	[illegible]
	E	SEE ECP NO. 87HE3366R1	8 JUN 87	[illegible]

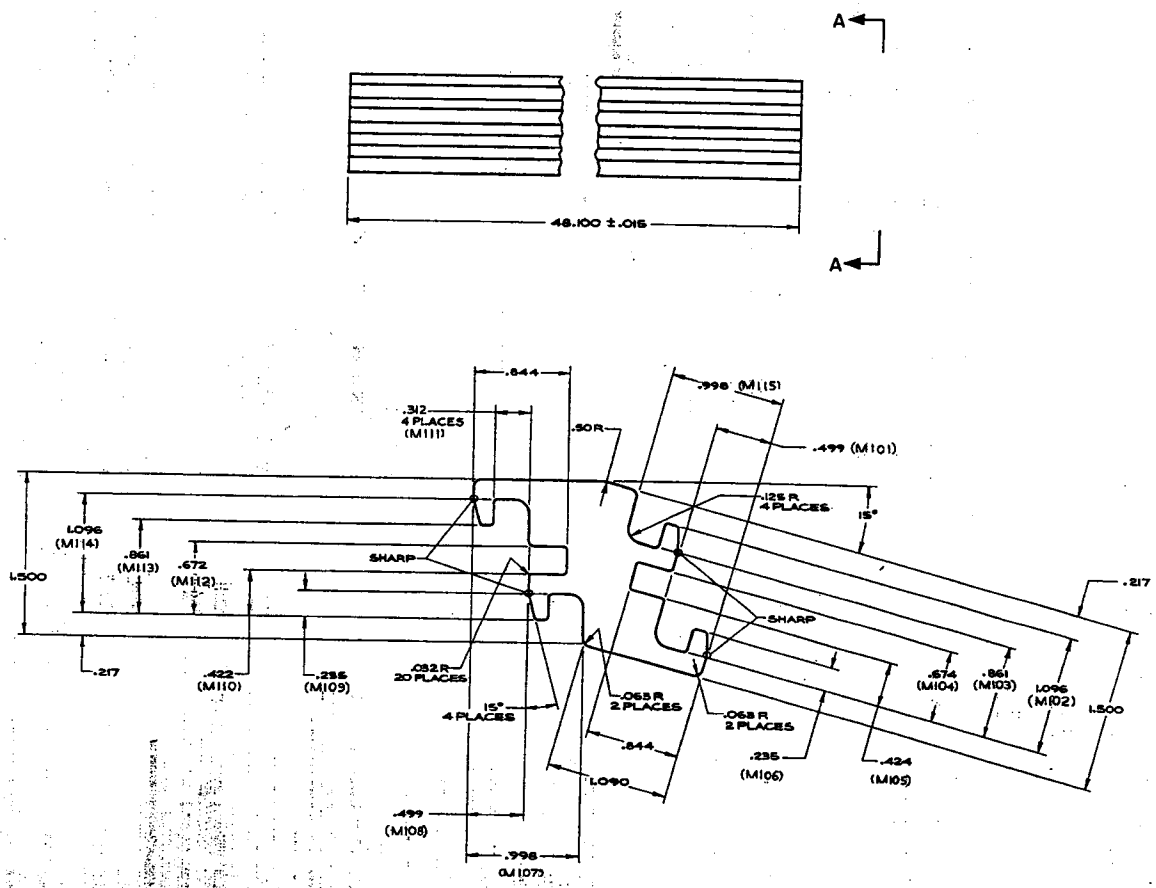

NOTES:

1. UNLESS OTHERWISE SPECIFIED, TOLERANCES ON EXTRUDED SHAPES SHALL BE IN ACCORDANCE WITH ANS H35.2
2. FINISHING, PAINTING AND MARKING SHALL BE IN ACCORDANCE WITH MIL-M-52612 (ME)
3. QUALITY ASSURANCE PROVISIONS: THESE REQUIREMENTS APPLY WHEN THIS PART IS PROCURED AS A REPAIR PART.
   A. SAMPLING FOR INSPECTION SHALL BE IN ACCORDANCE WITH MIL-STD-105.
   B. CLASSIFICATION OF CHARACTERISTICS:
      CRITICAL: NONE
      MAJOR AQL 1.0%
      M101-115

NEXT ASSY	USED ON
APPLICATION	
FOR INTERPRETATION OF DIMENSIONING AND TOLERANCING, [illegible]	

UNLESS OTHERWISE SPECIFIED DIMENSIONS ARE IN INCHES
TOLERANCES ANGLES ± ——
2 PLACE DECIMALS ± ——
3 PLACE DECIMALS ± ——
DO NOT SCALE THIS DRAWING
SHARP EDGES .010 TO .015
FILLET RADII —— TO ——
MATERIAL
AL ALY
6061-T6
ASTM B221

DRAWN VECO (DKB) DATE 19 APR 68
CHECKED [illegible]
DESIGN APPROVAL [illegible]
COMMODITY ENGINEER
APPROVED FOR PRODUCTION [illegible]
CHIEF, PRODUCTION ENGINEERING
RELEASED FOR PROCUREMENT [illegible]
CHIEF, ENGINEERING DEPT.
DATE 8 MAR 1968

U.S. ARMY MOBILITY EQUIPMENT COMMAND
ENGINEER RESEARCH AND DEVELOPMENT
LABORATORIES, FORT BELVOIR, VA.

TURN ADAPTER, OVERLAP/ UNDERLAP, 15 DEGREE TURNDOWN

SIZE	CODE IDENT NO.	
D	97403	13216E9539

SCALE 1/1 SHEET 1 OF 1