Monday, November 18, 2002 09:54:15

NOTES:

1. THIS DRAWING SHALL BE INTERPRETED IN ACCORDANCE WITH APPLICABLE STANDARDS LISTED IN DOD-STD-100. ASME Y14.5 DATED 1994 APPLIES.

2. SURFACE FINISH ON RECESSED AREA OF COVER BOTTOM SIDE 32 MICROINCHES MAXIMUM IN O-RING CONTACT AREA (INSIDE BOLT CIRCLE DIAMETER). ELSEWHERE 125 MICROINCHES MAXIMUM.

3. MATERIAL: CARBON STEEL PLATE, STRUCTURAL QUALITY, HOT ROLLED PER ASTM A36. DESCALED AND OILED.

REVISION			
LTR	DESCRIPTION	DATE	APPROVED
-	PRODUCT BASELINE	02-XX-XX	

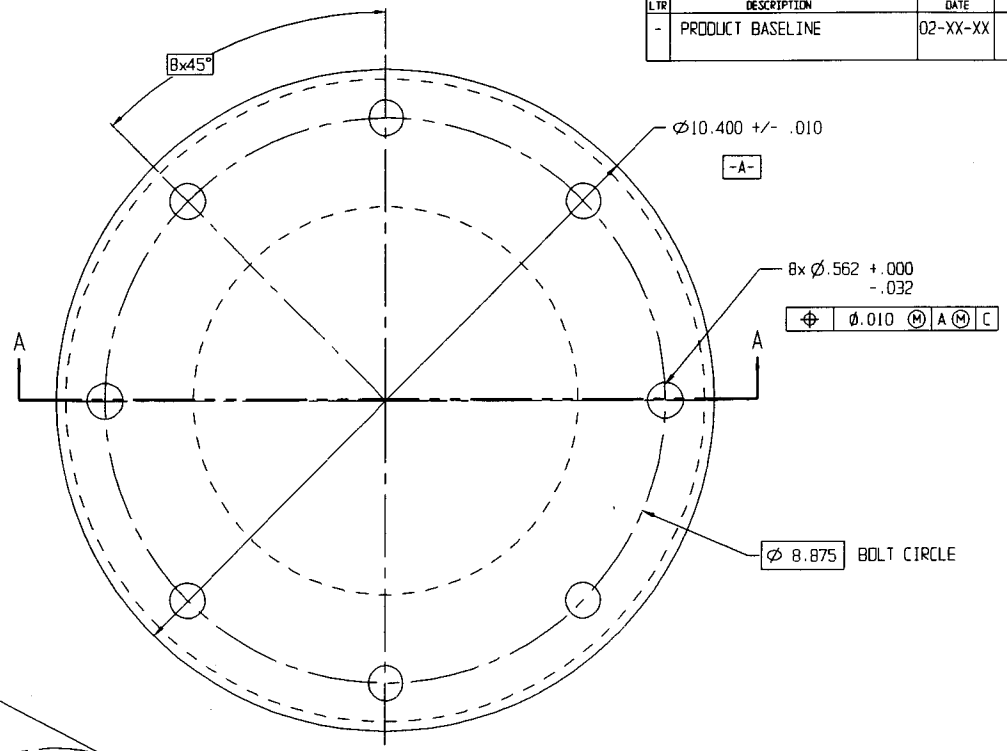

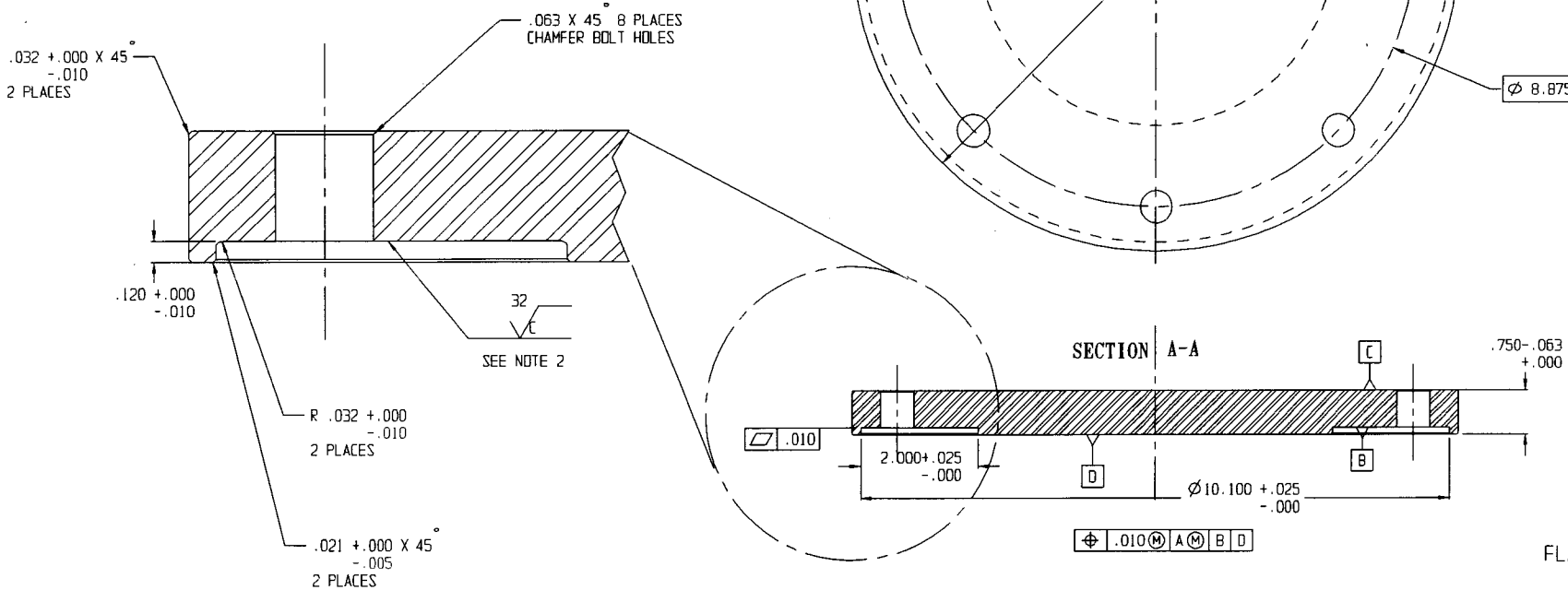

FLANGE COVER DETAIL

DISTRIBUTION STATMENT A.

APPROVED FOR PUBLIC RELEASE; DISTRIBUTION IS UNLIMITED.

XXXXXXXX			
NEXT ASSY	USED ON		
APPLICATION			

UNLESS OTHERWISE NOTED DIMENSIONS ARE IN INCHES. BREAK SHARP CORNERS AND EDGES.
TOLERANCES ON
FRACTIONS ±
DECIMALS ±.032
MATERIAL

DATE 02-XX-XX
DRAWN NLB CHECKED PROJ ENGR BONAVITO
CHIEF, ENGINEERING DIV
SUBMITTED
CHIEF, SBCCOM-
APPROVED BY ORDER OF COMMANDING GENERAL, U.S. ARMY MATERIEL COMMAND (AMC)
U.S. ARMY SOLDIER, BIOLOGICAL, & CHEMICAL COMMAND

DESIGN ACTIVITY U.S. ARMY SOLDIER, BIOLOGICAL & CHEMICAL COMMAND

FLANGE COVER FOR 7X27 INCH SINGLE ROUND CONTAINER.

SIZE D | CAGE CODE XXXXX | S727007

SCALE NONE | UNIT WT | SHEET 1 OF 1

Revised Attachment 002