Friday, September 06, 2002 13:43:19

REVISION			
LTR	DESCRIPTION	DATE	APPROVED
-	PRODUCT BASELINE	02-XX-XX	

NOTES:

1. THIS DRAWING SHALL BE INTERPRETED IN ACCORDANCE WITH APPLICABLE STANDARDS LISTED IN DOD-STD-100. ASME Y14.5 DATED 1994 APPLIES.
2. THE REQUIRED FINISH AT THE TOP FLANGE SURFACE IS 125 MICROINCHES MAXIMUM. HOWEVER, THE O-RING GROOVE SURFACE FINISH, BOTH SIDES AND BOTTOM IS 32 MICROINCHES MAXIMUM.
3. BREAK THESE CORNERS APPROXIMATELY 0.005 RADIUS.
4. MATERIAL: CARBON STEEL PLATE, STRUCTURAL QUALITY, HOT ROLLED PER ASTM A36. DESCALED AND OILED.

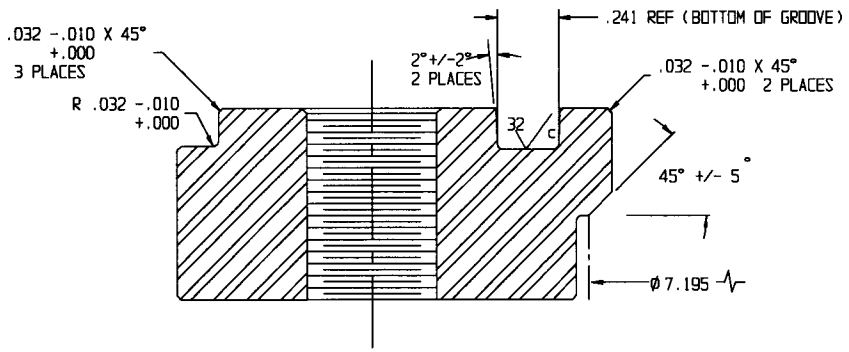

DETAIL-B

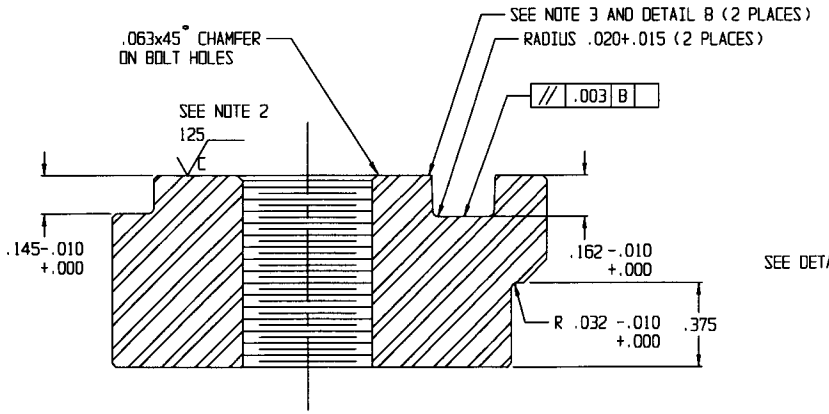

DETAIL-A

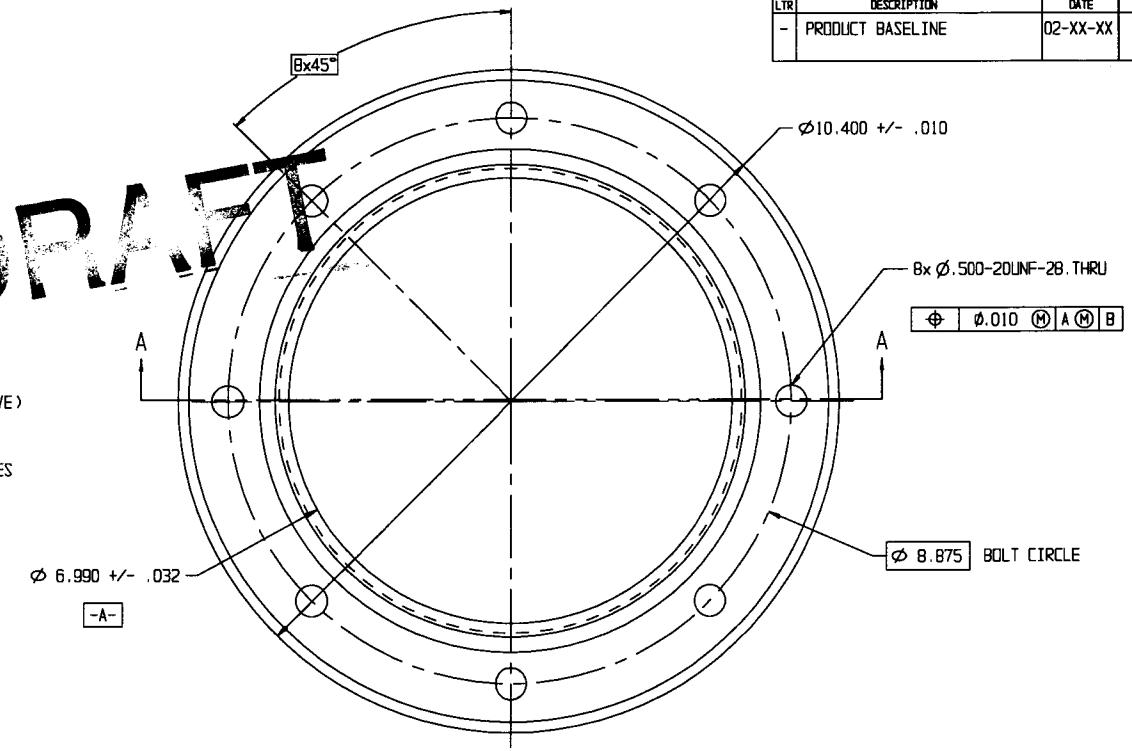

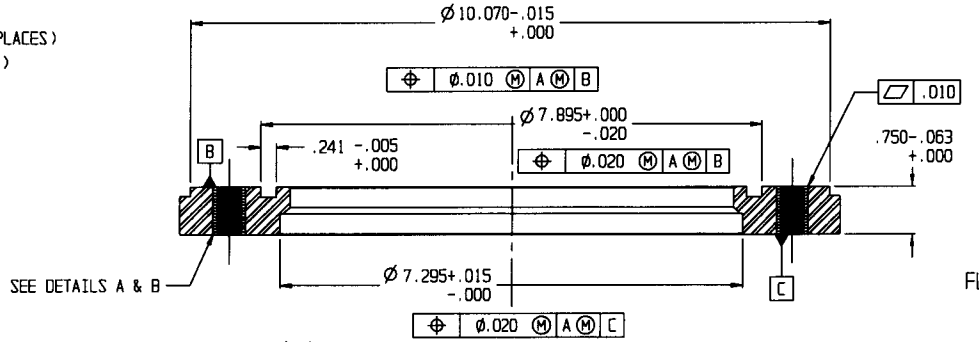

SECTION A-A

FLANGE DETAIL

DISTRIBUTION STATMENT A.

APPROVED FOR PUBLIC RELEASE; DISTRIBUTION IS UNLIMITED.

XXXXXXXX		UNLESS OTHERWISE NOTED DIMENSIONS ARE IN INCHES. BREAK SHARP CORNERS AND EDGES. TOLERANCES ON FRACTIONS ± DECIMALS ±.032	DATE 02-XX-XX; OPTION NLB; CHECKER; PROJ ENGR BONAVITO; MATERIAL
NEXT ASSY	USED ON		
APPLICATION			

DESIGN ACTIVITY U.S. ARMY SOLDIER, BIOLOGICAL & CHEMICAL COMMAND

FLANGE FOR 7X27 INCH SINGLE ROUND CONTAINER.

SIZE	CAGE CODE	
D	XXXXX	S727005
SCALE NONE	UNIT WT	SHEET 1 OF 1

Attachment 001

Saturday, July 27, 2002 11:25:08

NOTES:

1. THIS DRAWING SHALL BE INTERPRETED IN ACCORDANCE WITH APPLICABLE STANDARDS LISTED IN DOD-STD-100. ASME Y14.5 DATED 1994 APPLIES.
2. SURFACE FINISH ON RECESSED AREA OF COVER BOTTOM SIDE 32 MICROINCHES MAXIMUM IN O-RING CONTACT AREA (INSIDE BOLT CIRCLE DIAMETER). ELSEWHERE 125 MICROINCHES MAXIMUM.
3. MATERIAL: CARBON STEEL PLATE, STRUCTURAL QUALITY, HOT ROLLED PER ASTM A36. DESCALED AND OILED.

REVISION			
LTR	DESCRIPTION	DATE	APPROVED
-	PRODUCT BASELINE	02-XX-XX	

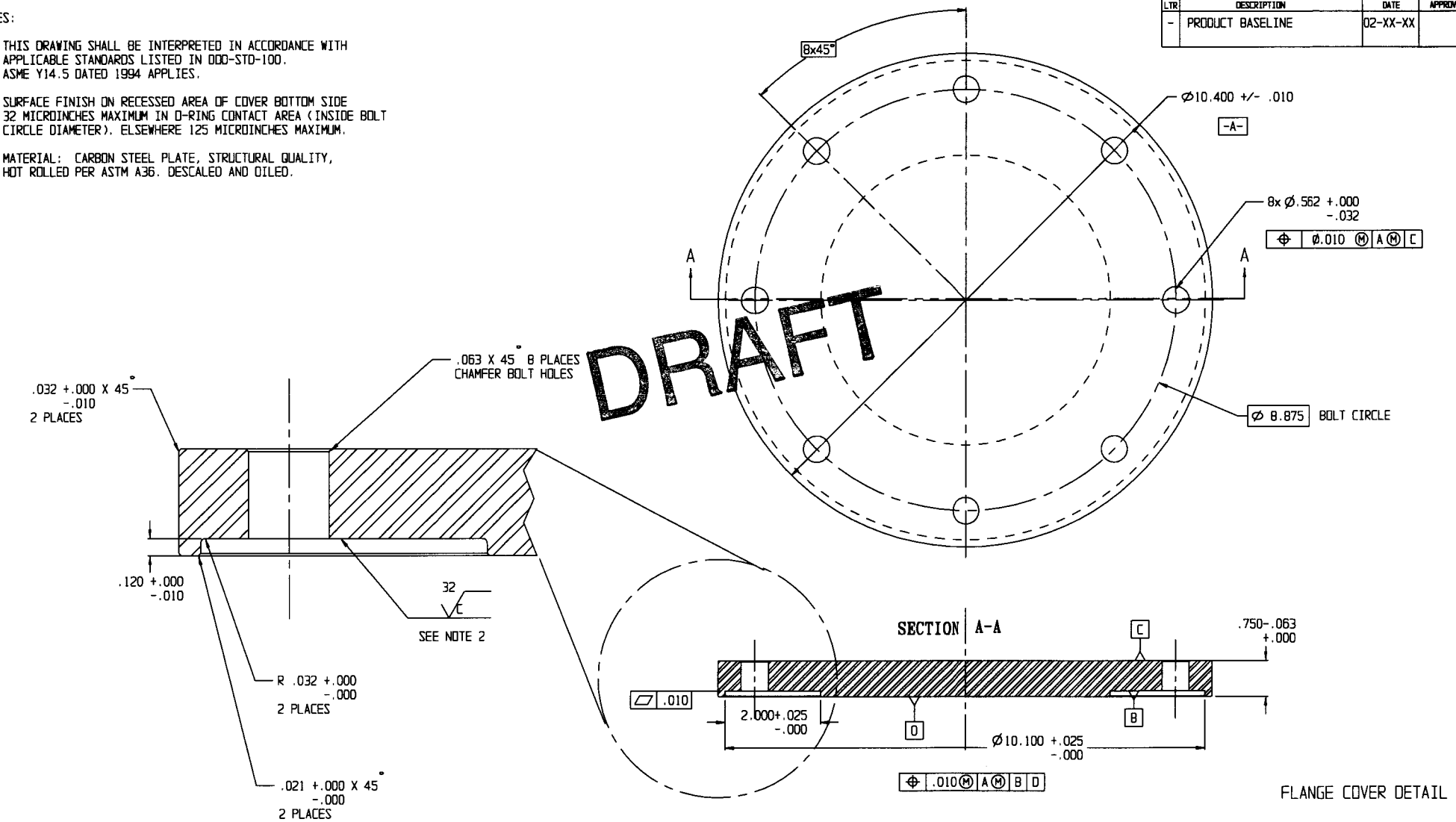

FLANGE COVER DETAIL

DISTRIBUTION STATMENT A.

APPROVED FOR PUBLIC RELEASE; DISTRIBUTION IS UNLIMITED.

XXXXXXX	
NEXT ASSY	USED ON
APPLICATION	

UNLESS OTHERWISE NOTED DIMENSIONS ARE IN INCHES. BREAK SHARP CORNERS AND EDGES.
TOLERANCES ON
FRACTIONS ±
DECIMALS ±.032
MATERIAL

DATE 02-XX-XX
DRAWN NLB
CHECKED
PROJ MGR BONAVITO
CHIEF, ENGINEERING DIV
CHIEF, DESIGN-TYYYYYYYY
APPROVED BY ORDER OF COMMANDING GENERAL, U.S. ARMY MATERIEL COMMAND (AMC)
U.S. ARMY SOLDIER, BIOLOGICAL, & CHEMICAL COMMAND

DESIGN ACTIVITY
U.S. ARMY
SOLDIER, BIOLOGICAL & CHEMICAL COMMAND

FLANGE COVER FOR 7X27 INCH SINGLE ROUND CONTAINER.

SIZE	CAGE CODE	
D	XXXXX	S727007
SCALE NONE	UNIT WT	SHEET 1 OF 1

Attachment 002

Monday, September 16, 2002 14:01:20

REVISION			
LTR	DESCRIPTION	DATE	APPROVED
-	PRODUCT BASELINE	02-??-??	

NOTE:

1. SERIALIZE FLANGE AND FLANGE COVER WITH A SIZE 0.125 INCH METAL STAMP. PUNCH AT LEAST .015" DEEP. MARKINGS ON COVER AND FLANGE MUST BE IN LINE WITH EACH OTHER DIRECTLY BENEATH A BOLT HOLE AND BE IDENTICAL AS SHOWN IN THE FIGURES. STAMPINGS SHOULD BE ON SIDE EDGE AS SHOWN.

   THE SERIAL NUMBER FORMAT SHOULD START WITH: R 001 PB ON THE FIRST FLANGE/COVER PAIR AND RUN THROUGH R 250 PB ON THE TWO HUNDRETH PAIR.

2. STENCIL UN POP MARKINGS IN BLACK INK WITH 1/2 INCH HIGH LETTERING MINIMUM ALONG THE LENGTH OF THE CONTAINER TUBE BODY AS SHOWN IN THE DRAWING. THE UN MARKINGS SHOULD READ:

1A2/X70.5/S/02
USA/DOD/ESK

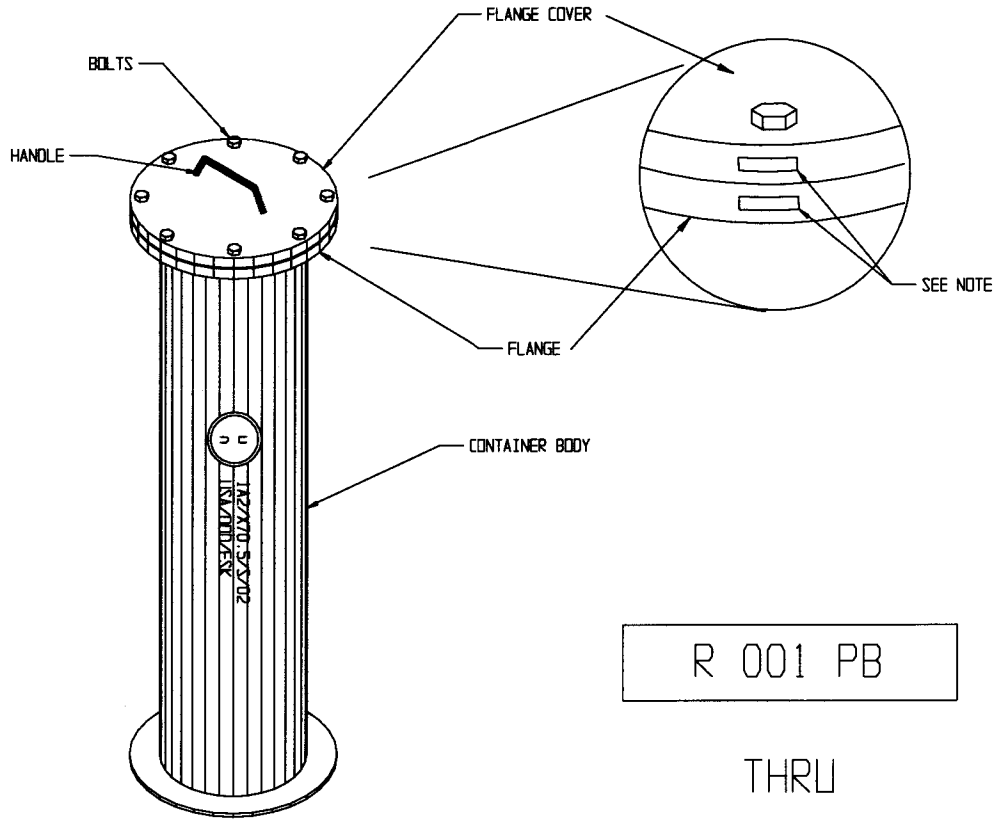

R 001 PB

THRU

R 250 PB

DISTRIBUTION STATEMENT A.

APPROVED FOR PUBLIC RELEASE;
DISTRIBUTION IS UNLIMITED.

UNLESS OTHERWISE NOTED DIMENSIONS ARE IN INCHES. BREAK SHARP CORNERS AND EDGES. TOLERANCES ON FRACTIONS ± DECIMALS ±.032	DATE 02-??-??		DESIGN ACTIVITY U.S. ARMY SOLDIER BIOLOGICAL & CHEMICAL COMMAND ROCK ISLAND ARSENAL ROCK ISLAND, ILLINOIS 61299
	OPTION NLB	CHECKER eee	PROJ ENGR BONAVITO
	TEST ENGINEER		SERIAL NUMBER FOR 7X27 SINGLE ROUND CONTAINER FLANGE AND COVER
????????	CHIEF, ELECTRONIC TEAM		
????????	APPROVED BY:		SIZE D · CAGE CODE 81361 · SN_S727_2002
NEXT ASSY · USED ON			
APPLICATION	CHIEF, ENGINEERING MANAGEMENT OFFICE		SCALE #/# · UNIT WT · SHEET 1 OF 1

Attachment 003

INSPECTION SHEET

7" X 27" SRC

Body/Cap Assembly Serial Number: _____

FLANGE	SPECIFICATIONS	ACTUAL MEASUREMENTS
SURFACE FINISH (Groove)	32 Micro-Inches Maximum	
LIP O.D.	10.070 (- .015)	
O-RING GROOVE WIDTH	.241 (-.005)	
O-RING GROOVE OD	7.895 (-.020)	
O-RING GROOVE DEPTH	.162 (- .010)	
TUBE INSERT OPENING DIA.	7.295 (+ .015)	
LIP DEPTH	.145 (-.010)	
COVER	**SPECIFICATIONS**	**ACTUAL MEASUREMENTS**
SURFACE FINISH(O-ring Area)	32 Micro-Inches Maximum	
LIP I.D.	10.100 (+ .025)	
LIP DEPTH	.120 (- .010)	

Tolerances are in parentheses.

Description of Defects:

_____

_____

_____

_____

FLANGE
Inspected by: _____

Date Inspected: _____

COVER
Inspected by: _____

Date Inspected: _____

Attachment 004