PACKAGING DATA SHEET

PERSONAL STOCK NO. 4240-01-129-0836

FEDERAL ITEM NAME: Stand, Filter Unit

PART OR DRAWING NO. 5-19-6290-20

LEVEL A UNIT PACKAGE REQUIREMENTS MIL-P-116: CIAIK

METHOD: III | CLE. AIRE: C-I | DRYING: Any

STEPS	SPEC. OR SPEC.	SIZE AND NOTES	STYLE	TYPE	GRADE	CLASS
PRESERVATIVE		INTERNAL				
PREWRAPPING		EXTERNAL				
INTIMATE WRAP						
CUSHIONING ***	PPP-C-843	18 1/2 x 8 1/4 x (4 rod		II		B
CONTAINER 1	PPP-B-636	36 x 31 x 9 1/2	FOL		VISC	WR
DESICCANT ***** 7	PPP-F-320	28 5/8 x 6 (2 rod)	SW	CF	HT	DO
CLOSURE 9	Heat Seal					
BARRIER						
CONTAINER ****** 8	PPP-S-30	4 x 8		I		
CUSHION 10	PPP-B-636	Appendix				
BUTTON PAD 2	PPP-F-320	36 x 31 (2 rod)	SW	CF	HT	DO
BASE ** 3	NN-F-530	36 x 31 x 1/2				
LINER 4	PPP-F-320	36 x 31 x 8 3/4 U.D.	SW		VISC	WR
SPACER ***** 5	PPP-F-320	11 3/8 x 35 1/2	SW		HT	DO

UNIT PKG QTY: 1 | UNIT PACKAGE WT: 88.48 | UNIT PACKAGE CUBE: 7.460 | UNIT PACKAGE SIZE (EXTERNAL) FEET: 3.06 x 2.65 x .92

INTERMEDIATE PKG QTY: ---- | PREPARING ACTIVITY: DRSMC-CLJ-P (A) | DATE: 31 Aug 82 | REVISION: A | DATE: 31 Jul 84 | SHEET NO. 1 OF 5

INTERMEDIATE PACKAGING AND PACKING WILL BE IN ACCORDANCE WITH SPECIFICATION MIL-P-14232 OR AS OTHERWISE SPECIFIED HEREON.

SPECIFICATIONS, STANDARDS, AND DRAWINGS LISTED HEREON OF THE ISSUE IN EFFECT ON DATE OF INVITATION FOR BID FORM A PART OF THIS DATA SHEET. DIMENSIONS ARE MAXIMUM PERMISSIBLE. THE APPLICABLE GENERAL AND REFERENCED REQUIREMENTS OF SPECIFICATION MIL-P-116E FORM PART OF THIS DATA SHEET.

LEVEL B: UNIT PACKAGE THE SAME AS LEVEL A OR AS OTHERWISE SPECIFIED HEREON.

MARKING WILL BE IN ACCORDANCE WITH MIL-STD-129/MIL-P-14232. /ASTM D3951

FINISHES AND NOTES

Commercial packaging shall be in accordance with ASTM D3951. Unit package quantities shall be as specified above.

* - See sheet 2 for general packaging configuration.

** - See sheet 3 for dimensional configuration of base. Item to be disassembled prior to packaging and securing to plywood base with 3/8-16 x 3 3/4 lg hex head machine screws using flat and lock washers and nuts.

*** - Wrap reinforcing rod in PPP-C-843 and secure with PPP-T-42 - type II - class 1, size 2 x 5 (2 pcs each).

**** - See sheet 4 for dimensional configuration. Shape configuration to be maintained using PPP-T-60, size 2 x 35 1/2 (1 pc).

***** - See sheet 5 for dimensional configuration. Shape configuration to be maintained using PPP-T-60, size 2 x 6 (1 pc each).

****** - Place loose parts as specified on PL-5-19-6290 in bag.

Logistics Data

Item Code	-	980
Item Size	-	2.96 x 2.42 x .70
Item Weight	-	50.78
Item Cube	-	5.01
Int Weight	-	
Int Cube	-	

Approval	Date
W. E. Smith	31 Aug 82
Revisions	
[illegible]	31 Jul 84

AMC Form 30 JUL 68 1029

PACKAGING DATA SHEET (Continued) (AMCR 715-64)

SHEET 2 OF 5 SHEETS

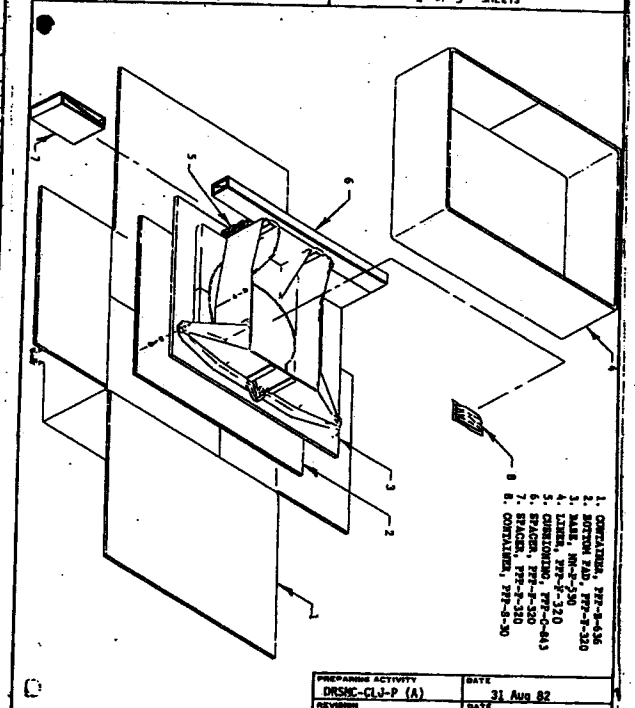

PREPARING ACTIVITY: DRSMC-CLJ-P (A)	DATE: 31 Aug 82
REVISION: A	DATE: 31 Jul 84
FEDERAL ITEM NAME: STAND, FILTER UNIT	PART OR DRAWING NO.: 5-19-6290-20
	FEDERAL STOCK NO.: 4240-01-129-0836

AMC Form 1029-1

PACKAGING DATA SHEET (Continued) (AMCR 715-64)

SHEET 3 OF 5 SHEETS

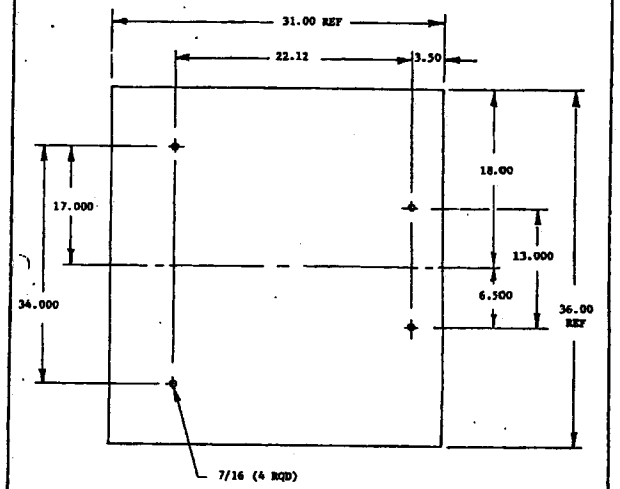

PREPARING ACTIVITY: DRSMC-CLJ-P (A)	DATE: 31 Aug 82
REVISION: A	DATE: 31 Jul 84
FEDERAL ITEM NAME: STAND, FILTER UNIT	PART OR DRAWING NO.: 5-19-6290-20
	FEDERAL STOCK NO.: 4240-01-129-0836

AMC Form 1029-1

ATTACHMENT 004

PACKAGING DATA SHEET (Continued)
(AMCR 715-68)

SHEET 4 OF 5 SHEETS

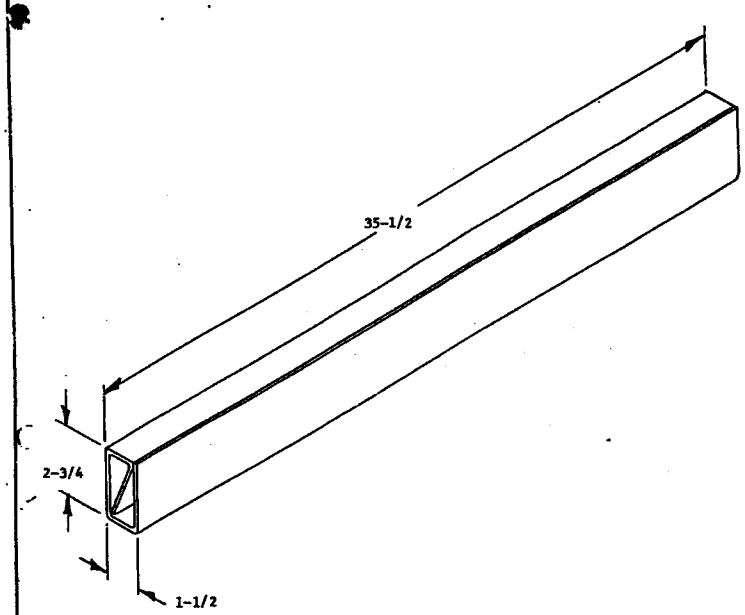

PREPARING ACTIVITY DRSMC-CLJ-P (A)		DATE 31 Aug 82
REVISION A		DATE 31 Jul 84
FEDERAL ITEM NAME STAND, FILTER UNIT	PART OR DRAWING NO. 5-19-6290-20	FEDERAL STOCK NO. 4240-01-129-0836

AMC FORM 1 DEC 71 1029-1

PACKAGING DATA SHEET (Continued)
(AMCR 715-68)

SHEET 5 OF 5 SHEETS

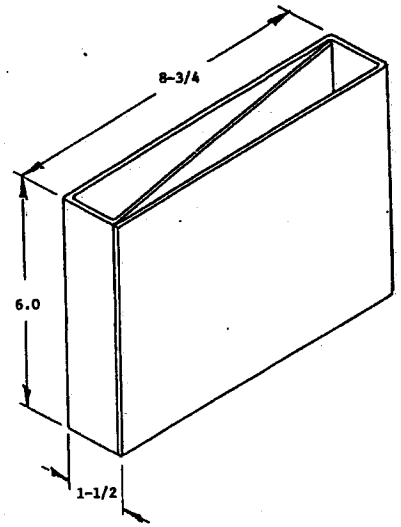

PREPARING ACTIVITY DRSMC-CLJ-P (A)		DATE 31 Aug 82
REVISION A		DATE 31 Jul 84
FEDERAL ITEM NAME STAND, FILTER UNIT	PART OR DRAWING NO. 5-19-6290-20	FEDERAL STOCK NO. 4240-01-129-0836

AMC FORM 1 DEC 71 1029-1