Friday, September 19, 2003 09:19:21

REVISION			
LTR	DESCRIPTION	DATE	APPROVED
-	PRODUCT BASELINE	03-??-??	

NOTES:

1. THIS DRAWING SHALL BE INTERPRETED IN ACCORDANCE WITH APPLICABLE STANDARDS LISTED IN DOD-STD-100. ANSI Y14.5-DATED 1994 APPLIES. AWS 2.4-86 APPLIES.
2. MATERIAL: 304 STAINLESS STEEL 10 GAUGE. ROUND TUBING PER ASTM A554-94 OR ASTM A269-02a. ELECTRIC RESISTANCE WELDED. PLANISH TO FLATTEN WELD BEAD.
3. RADIOGRAPHIC INSPECTION OF SEAM WELD WILL BE IN ACCORDANCE WITH ASTM E390-95 GRADE 2 AND MIL STD 453c-1988.
4. REMOVE BURRS AND BREAK SHARP EDGES .016 INCHES.
5. TOLERANCES ON STOCK MATERIAL SIZES SHALL BE AS SPECIFIED IN VENDOR SPECIFICATIONS.

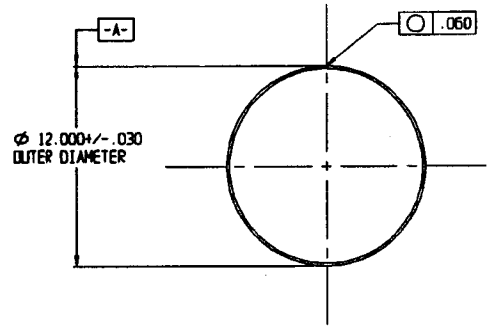

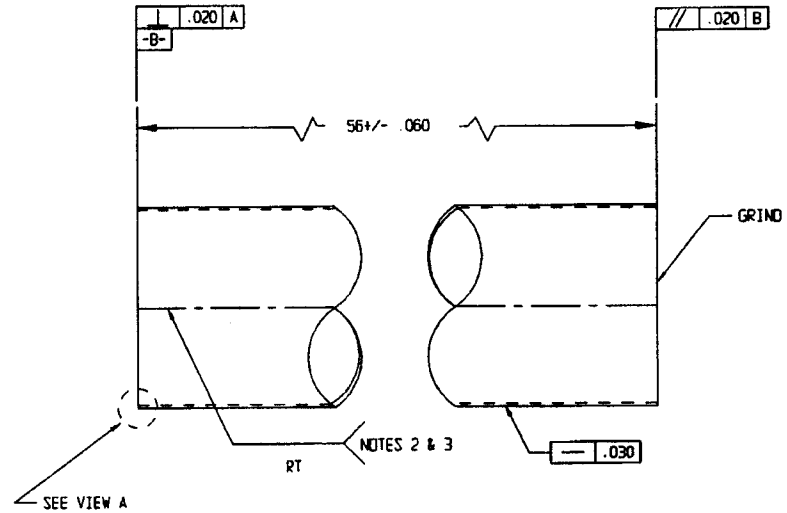

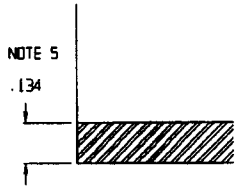

VIEW A

DISTRIBUTION STATEMENT A.

APPROVED FOR PUBLIC RELEASE; DISTRIBUTION IS UNLIMITED.

UNLESS OTHERWISE NOTED DIMENSIONS ARE IN INCHES. BREAK SHARP CORNERS AND EDGES. TOLERANCES ON FRACTIONS ___ DECIMALS ___	DATE 03-07-07	DESIGN ACTIVITY U.S. ARMY EDGEWOOD CHEMICAL BIOLOGICAL CENTER ROCK ISLAND ARSENAL, ROCK ISLAND ILLINOIS 61299
	DRAFTSMAN BONAVITO / PROJ ENGR BONAVITO	TUBE BODY FOR 12x56 MULTIPLE ROUND CONTAINER.
??????? / ???????	TEST ENGINEER / APPROVED	SIZE D / CAGE CODE 81361 / M1256004
NEXT ASSY / USED ON		SCALE NONE / UNIT WT / SHEET 1 OF 1
APPLICATION	CHARP-VICK ROCK ISLAND	

Attachment 003