Tuesday, August 26, 2003 10:22:25

NOTES:

1. OUTER LINING MATERIAL: 500 DENIER, CORDURA OR EQUIVALENT; OD GREEN OR BLACK
2. INNER LINING MATERIAL: 500 DENIER, CORDURA OR EQUIVALENT; OD GREEN OR BLACK
3. 1/4 INCH THICK FOAM PADDING BETWEEN EXTERIOR AND INTERIOR LINING
4. SEAM BINDING. STITCHED SEAM.
5. WEB STITCH TO BAG ENDS HERE SHOULD REMAIN UNATTACHED ABOVE THIS POINT

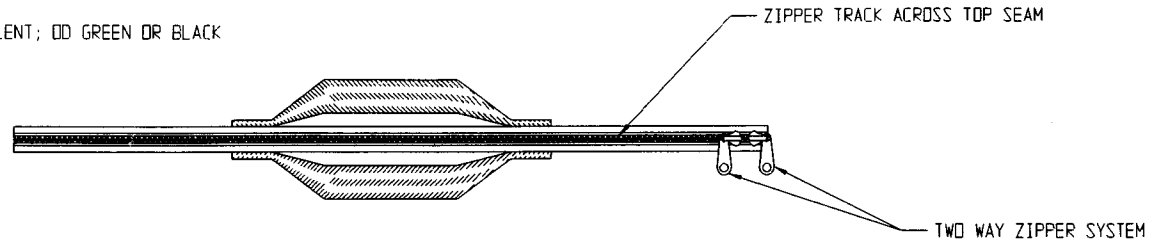

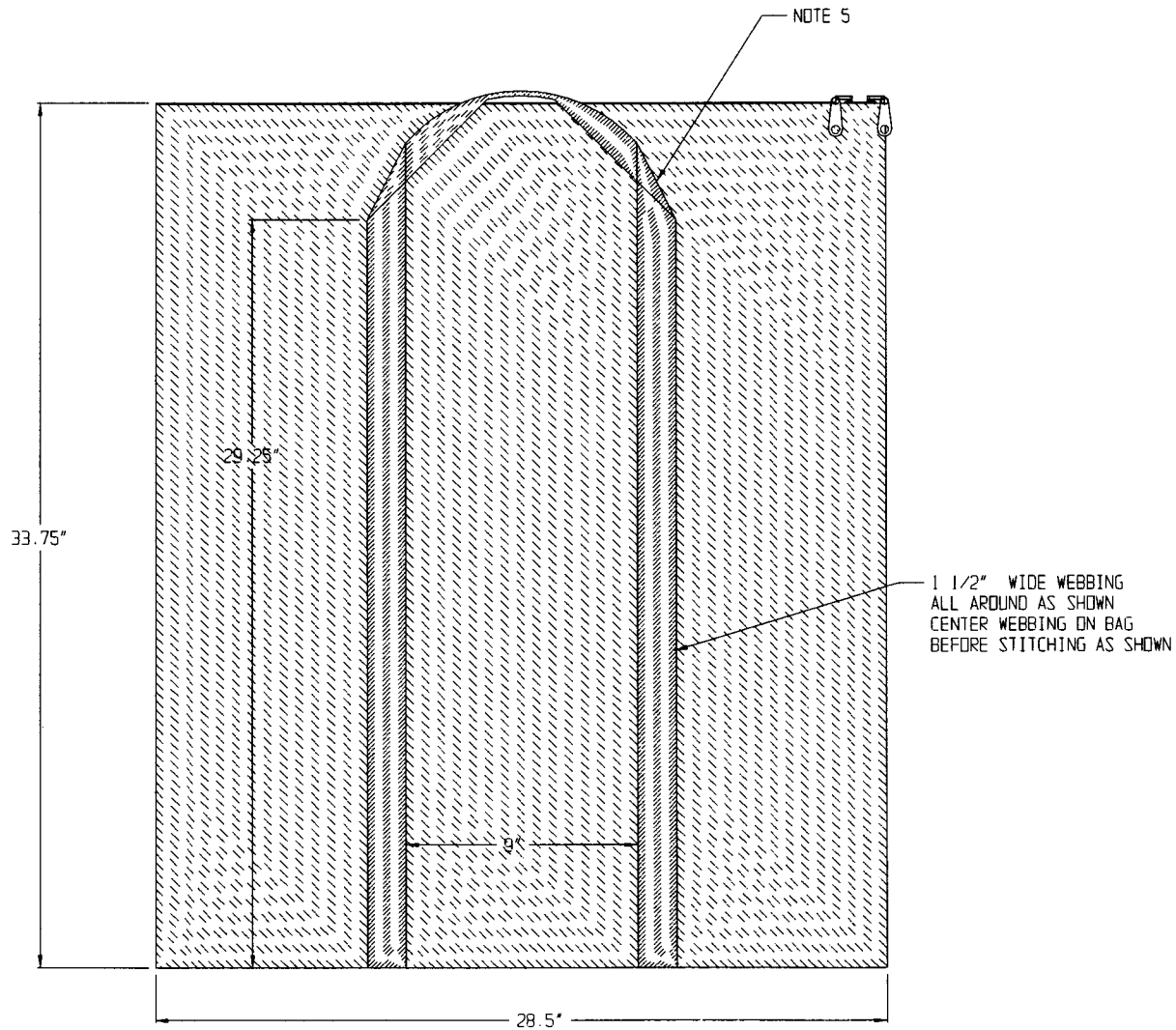

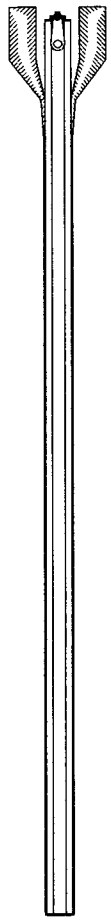

ITAP BAG

NLB 6/23/03