ATTACHMENT 004

NOTES:

1. THIS DRAWING SHALL BE INTERPRETED IN ACCORDANCE WITH APPLICABLE STANDARDS LISTED IN DOD-STD-100.
2. THE FOLLOWING ARE MANDATORY WHEN INDICATED BY: ☒
   - ☐ REMOVE BURRS ☐ BREAK SHARP EDGES .010 MAX
   - ☐ FILLETS R .010 MAX
   - ☐ 125 ALL OVER EXCEPT AS NOTED
   - ☐ DIMENSIONS APPLY AFTER PLATING
   - ☐ TOLERANCES ON STOCK MATERIAL SIZES, SHALL BE AS SPECIFIED IN APPLICABLE SPECIFICATIONS.
   - ☐ ANSI Y14.5-DATED 1973 APPLIES
   - ☐ FED-STD-H28 APPLIES
3. REMOVE FLASH TO WITHIN .010 OF FLUSH.
4. NO FLASH ALL AROUND.
5. MATERIAL: PLASTIC MOLDING AND EXTRUSION MATERIAL, POLYPHENYLENE OXIDE, PER PD EA-P-1466, TYPE 1, COLOR BLACK WITH THE EXECEPTION THAT THE PHYSICAL PROPERTY FLAMMABILITY IS NOT REQUIRED.
6. EJECTOR PIN MARKS ARE ACCEPTABLE RECESSED OR RAISED AND SHALL NOT EXCEED .010.
7. IDENTIFICATION MARKING SHALL BE .09 ±.03 HIGH AND RAISED .010±.005. MARKING SHALL BE LOCATED .020 FROM EDGE ON THE FLAT SIDE.

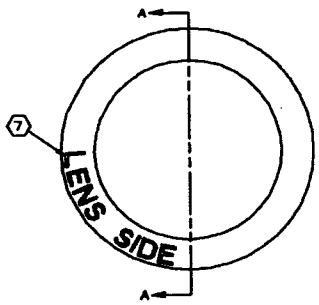

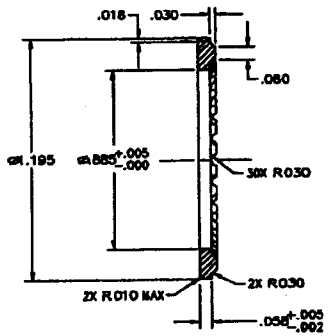

SECTION A–A

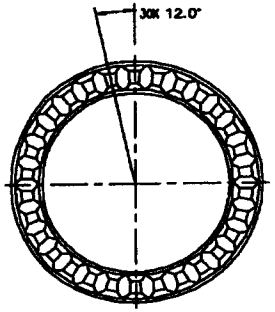

REVISIONS			
LTR	DESCRIPTION	DATE (YR-MO-DA)	APPROVED

PARTS LIST

QTY REQD	SYM	DRAWING OR PART NO	NOMENCLATURE OR MATERIAL	SPECIFICATION	ITEM NO.

APPLICATION	
NEXT ASSY	USED ON

UNLESS OTHERWISE SPECIFIED
DIMENSIONS ARE IN INCHES
TOLERANCES ON
DECIMALS ± .005
ANGLES ± 1/2°
FRACTIONS ± 1/16
SURFACE 125

MATERIAL
5

DO NOT SCALE DWG.

DRAWN BY S. D. SAXTON, JR.
CHECKED BY
ENGINEER
APPROVED BY
MANUFACTURE
CONTROL

U.S. ARMY ARMAMENT, MUNITIONS & CHEMICAL COMMAND
GROUND RESEARCH, DEVELOPMENT AND ENGINEERING CENTER
ABERDEEN PROVING GROUND, MARYLAND, 21005-5423

RNVS RING

SIZE	CAGE CODE	DWG NO.
D	81361	5-1-2798

SCALE 4/1 SHEET 1/1