ATTACHMENT 005

NOTES:

1. THIS DRAWING SHALL BE INTERPRETED IN ACCORDANCE WITH APPLICABLE STANDARDS LISTED IN DOD-STD-100.
2. THE FOLLOWING ARE MANDATORY WHEN IDICATED BY: ☒
   - ☐ REMOVE BURRS ☐ BREAK SHARP EDGES .010 MAX
   - ☐ FILLETS R .010 MAX
   - ☐ 125√ ALL OVER EXCEPT AS NOTED
   - ☐ DIMENSIONS APPLY AFTER PLATING
   - ☐ TOLERANCES ON STOCK MATERIAL SIZES, SHALL BE AS SPECIFIED IN APPLICABLE SPECIFICATIONS.
   - ☐ ANSI Y14.5-DATED 1973 APPLIES
   - ☐ FED-STD-H28 APPLIES
3. REMOVE FLASH TO WITHIN .010 OF FLUSH.
4. NO FLASH ALL AROUND.
5. MATERIAL: PLASTIC MOLDING AND EXTRUSION MATERIAL, POLYPHENYLENE OXIDE, PER PD EA-P-1486, TYPE 1, COLOR BLACK WITH THE EXCEPTION THAT THE PHYSICAL PROPERTY FLAMMABILITY IS NOT REQUIRED.
6. EJECTOR PIN MARKS ARE ACCEPTABLE RECESSED OR RAISED AND SHALL NOT EXCEED .010.

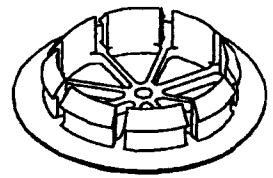

REF. VIEW ONLY

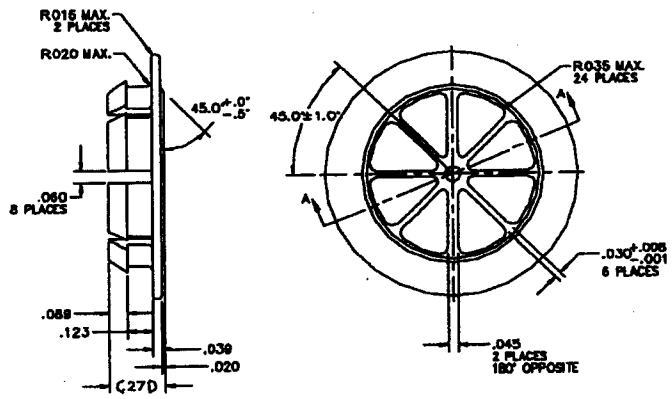

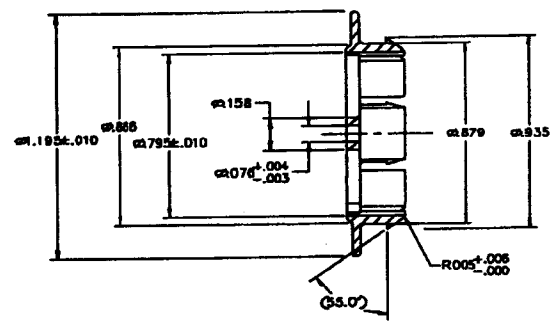

SECTION A-A
ROTATED 67.5 CCW

SEAT, NOSECUP VALVE	
D 81361	5-1-2799
SCALE 4/1	SHEET 1/1