DRAWING SIZE C
(ARRADCOMR 70-12)

NOTES:

1—ELEMENT IN ACCORDANCE WITH SPEC. MIL-O-13830.
2—SURFACE QUALITY: CENTRAL ZONE (0.450 DIA.) 10-5
OUTER ZONE 80-50.
3—LIGHT DEVIATION NOT TO EXCEED 2 MINUTES OF ARC.
4—SURFACES MARKED 'P' POLISHED.
5—CHAMFERS AND RIM GROUND.
6—CHAMFERS NOT TO EXCEED .015 (FACE WIDTH) AT 45°±5°.
7—CENTER LINES, CIRCLES, AND OTHER ETCHINGS TO BE THE SMALLEST SIZE POSSIBLE AND MAINTAIN ADEQUATE VISIBILITY. SCALE LINES .01 AND .015 LONG. FIGURES AND LETTERS .008 +.002 HIGH. ETCH ALL LINES, CIRCLES, FIGURES, AND LETTERS AND FILL IN WITH SODIUM SILICATE AND TITANIUM DIOXIDE. CENTER LINES INTERSECT GEOMETRIC AXIS WITHIN .006. MAXIMUM DISPLACEMENT OF ANY MIL MARK NOT TO EXCEED ±.001 FROM NOMINAL. LOCATE CIRCLE CENTERS AT INTERSECTION OF CENTER LINES ±0.0005.
8—LOCATE THE IDENTIFICATION, N97-07, WITHIN THE FIELD OF VIEW AT THE LOCATION SHOWN (WITHIN 0.560 DIA CIRCLE). THE 'N' IN "N97-07" DESIGNATES THAT THIS RETICLE IS FOR USE IN THE NORTHERN HEMISPHERE. THE "97-07" INDICATES THAT THIS RETICLE WILL MAINTAIN ITS REQUIRED ACCURACY FROM THE YEARS 1997 THROUGH 2007.
9—MAKE FROM OPTICAL GLASS, GRADE B, TYPE 584-460 OR TYPE 523-586, SPEC. MIL-G-174.

REVISIONS			
SYM	DESCRIPTION	DATE	APPROVAL
—	PRODUCTION RELEASE ERR F2A2080/83-0524	830601	TT DML
A	NOR F3A2086/830913	850220	DML
B	NOR F5A2021/850308	850514	DML
C	NOR D7A2027/870708	880630	DML ORIVZ
D	NOR D6A2011 961028	961215	JB

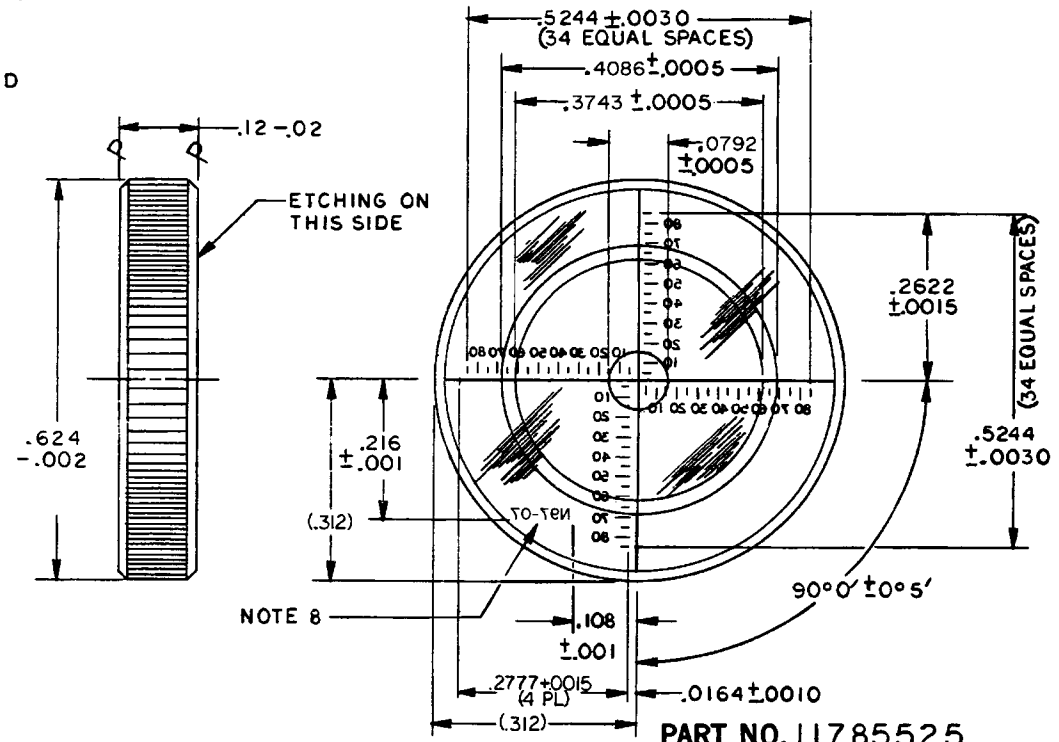

PART NO. 11785525

9362776	M2A2 AIMING CIRCLE		
NEXT ASSY	USED ON		
APPLICATION			

MECHANICAL PROPERTIES: YP, TS, EL2, RA, BH, RH

DO NOT SCALE DRAWING
UNLESS OTHERWISE SPECIFIED DIMENSIONS ARE IN INCHES
TOLERANCES ON DECIMALS ±
FRACTIONS ± ANGLES ±

ORIGINAL DATE OF DRAWING 83-03-31
DRAFTSMAN T.T. CHECKER
ENGR DML ENGR
ENGR ENGR
J H Wiland
Rw McDowell

U S ARMY ARMAMENT RESEARCH AND DEVELOPMENT CENTER
DOVER, NEW JERSEY 07801

RETICLE
M2A2 AIMING CIRCLE

SIZE C | FSCM NO. 19200 | 11785525
SCALE 8/1 | UNIT WT. | SHEET

ARRADCOM FORM 87 AUG 77 REPLACES SARPA FORM 1040 OCT 78 WHICH MAY BE USED UNTIL EXHAUSTED

F7573291

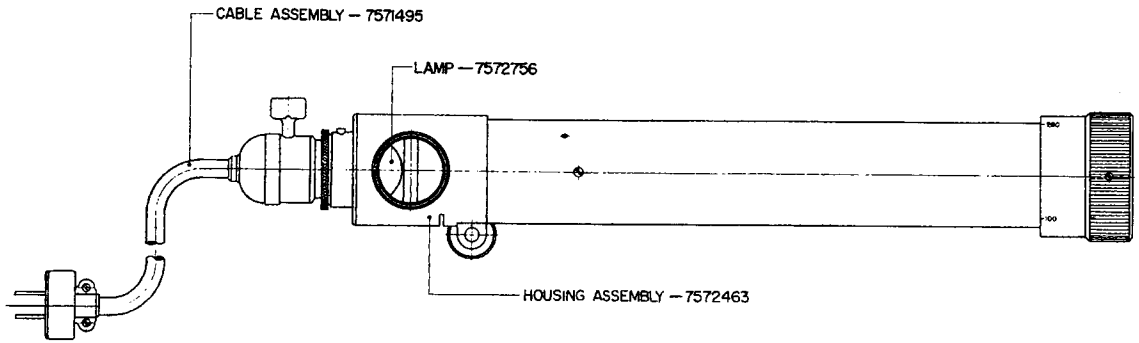

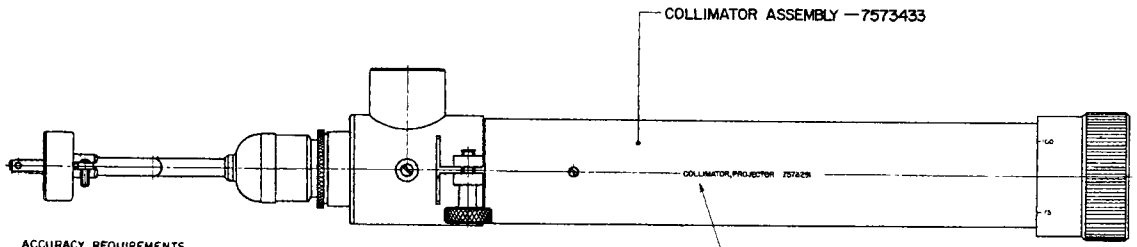

ENGRAVE LETTERS AND NUMBERS
1/8 HIGH X .010 DEEP CENTRALLY SPACED
FILL WITH FINISH 30.1.1 OR 30.1.2
COLOR WHITE, MIL-STD-171

ACCURACY REQUIREMENTS

1 — ANGULAR ACCURACY: AT THE INFINITY POSITION OF THE OBJECTIVE ASSEMBLY, THE ANGULAR SEPARATION BETWEEN THE LEFT AND RIGHT 50 MIL GRADUATION MARKS SHALL BE 100 MILS ± 2 MILS.

2 RESOLUTION: THE AXIAL RESOLUTION OF THE COLLIMATOR AS A TELESCOPE SHALL BE 5 SECONDS OR LESS AT ONE FOCUS SETTING OF AN OBSERVATION TELESCOPE OF AT LEAST 3 POWER AND AT LEAST 7/16 APERTURE POSITIONED AT THE EYEPIECE OF THE COLLIMATOR. RESOLUTION CONSISTS OF DETECTABLE LINE STRUCTURE AND PROPER LINE COUNT IN ALL FOUR MERIDIANS.

3 RANGE ACCURACY: AS A COLLIMATOR THE GRADUATIONS ON THE RANGE SCALE OF THE COLLIMATOR SHALL INDICATE THE OBSERVED RANGE WITHIN 2% FROM THE INFINITY POSITION OF THE RANGE SCALE. THE RETICLE TARGET IMAGE SHALL REPRESENT AN INFINITE TARGET DISTANCE WITHIN 0.1 MIL FOCUS PARALLAX ERROR WHEN CHECKED BY AUTO-COLLIMATION AT THE COLLIMATOR EYEPIECE. THIS TEST SHALL BE PERFORMED BY USING THE BEAMSPLITTER ASSEMBLY AT THE EYEPIECE AND AT FLAT MIRROR AT THE OBJECTIVE END OF THE COLLIMATOR.

LIST OF DRAWINGS

COL. LINE	TITLE	2 DRAWING NUMBER	3 REVISION SYM	3 REVISION DATE	4 DRAWING NUMBER	5 REVISION SYM	5 REVISION DATE
1	ASSEMBLY	F7573291					
2							
3							
4					A5206259		
5					A5206260		
6	OPTICAL SYSTEM	C7572449					
7					A7572677		
8	LIST OF SPECIFICATIONS	B7571498			A7572678		
9					A7572686		
10	COLLIMATOR ASSEMBLY	D7573433			A7572687		
11		SHEET 1			A7572688		
12	LIST OF MATERIAL	D7573433			A7572700		
13		SHEET 2			A7572701		
14					A7572703		
15					A7572704		
16		C7572446			A7572705		
17		C7572447			A7572706		
18		C7572462			A7572707		
19	HOUSING ASSEMBLY, LAMP	C7572463			A7572724		
20					A7572725		
21					A7572726		
22	OBJECTIVE ASSEMBLY	A7571477			A7572727		
23		B7571478			A7572728		
24		B7571479			A7572729		
25		B7571480			A7572730		
26		B7571482			A7572732		
27	HOLDER ASSEMBLY	B7571489			A7572756		
28	CABLE ASSEMBLY	B7571495			A7572758		
29		B7571496			A7572759		
30		B7571497			A7572760		
31		B7571499			A7572763		
32	WINDOW ASSEMBLY	B7571500			A7572764		
33	EYEPIECE ASSEMBLY	B7571599					
34		B7571600					
35		B7572467					
36					BCUX2		
37					BCUX4.3		
38		A5045960					
39		A5045961			BFDX1		
40							
41		A504635					
42					DTCX3		
43		A5182861					
44							
45		A5205589					

PART NO. 7573291
CODE IDENT NO. 19200

SEE SEPARATE PARTS LIST 7573291

U.S. ARMY
ARMAMENT RESEARCH, DEVELOPMENT AND ENGINEERING CENTER
PICATINNY ARSENAL, NEW JERSEY 07806-5000

REVISIONS		
L	NOR DIQ2054	91-11-13
K	FDA0043/81-02-23	82-01-13
J	SEE ECO 9[illegible]	[illegible]
H	SEE ECO [illegible]	[illegible]
G	SEE ECO [illegible]	[illegible]
F	SEE ECO [illegible]	[illegible]
E	SEE ECO [illegible]	[illegible]
D	SEE ECO [illegible]	[illegible]
C	[illegible]	[illegible]

PHYSICAL PROPERTIES
TOLERANCES
MATERIAL
HEAT TREATMENT
FINAL PROTECTIVE FINISH
APPLICATION
DO NOT SCALE
APPLY PART NO.

COLLIMATOR PROJECTOR
ASSEMBLED VIEWS

SCALE 1/1

F 7573291

DISTRIBUTION STATEMENT A.
APPROVED FOR PUBLIC RELEASE;
DISTRIBUTION IS UNLIMITED.

C 7659826

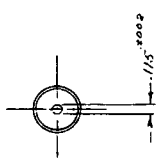

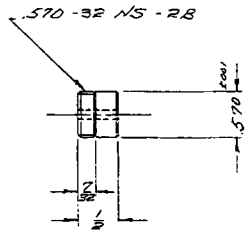

(1) APERTURE 1 REQD BRASS
5/8 DIA. x 5/8

STR	DESCRIPTION	DATE	APPROVAL

REVISIONS

PHYSICAL PROPERTIES	
YP	
TS	
EL 2	
RA	
BH	
RH	

SEE ENGINEERING RECORDS

C7652772

NEXT ASSY | USED ON

APPLICATION

DO NOT APPLY PART NO.

OO AS SPECIFIED

UNLESS OTHERWISE SPECIFIED DIMENSIONS ARE IN INCHES

TOLERANCES ON DECIMALS ANGLES FRACTIONS ± 1/64

MATERIAL
AS SPECIFIED

HEAT TREATMENT

FINAL PROTECTIVE FINISH

ORIGINAL DATE OF DRAWING 9-25-57

DRAFTSMAN RBM CHECKER SE

TRACER CHECKER

ENGINEER CHECKER

SUBMITTED
H. Knight
FNGORD CORPS

APPROVED BY ORDER OF THE CHIEF OF ORDNANCE
R. F. McNeal
FNGORD CORPS

APERTURE

USED ON:
TEST FIXTURE
FOR: AIMING CIRCLE M-2

SCALE FULL UNIT WT

FIRE CONTROL INSTRUMENT GROUP
ORDNANCE CORPS
DEPT OF THE ARMY
FRANKFORD ARSENAL
PHILA. 37, PA.

DWG SIZE C

7659826

SHEET 1 OF 1

1177-3

C 7659829

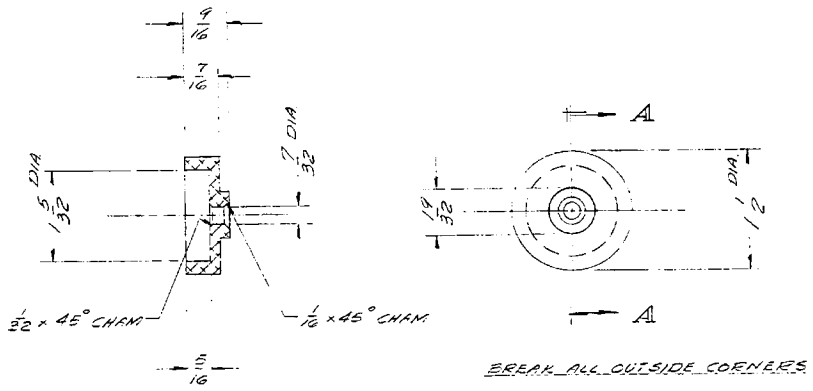

SECTION A-A

BREAK ALL OUTSIDE CORNERS

ADAPTER 1-REQ'D. ALUM.

SYM	DESCRIPTION	DATE	APPROVAL

REVISIONS

PHYSICAL PROPERTIES	
YP	
TS	
EL 2	
RA	
BH	
RH	

SEE ENGINEERING RECORDS

NEXT ASSY	USED ON
F7681316	F7681311

APPLICATION

~~DO NOT~~ ~~APPLY PART NO.~~

~~DO~~ ~~AS SPECIFIED~~

UNLESS OTHERWISE SPECIFIED DIMENSIONS ARE IN INCHES

TOLERANCES ON DECIMALS — ANGLES — FRACTIONS ±1/64

MATERIAL: AS SPECIFIED

HEAT TREATMENT

FINAL PROTECTIVE FINISH: BLACK ANODIZE

ORIGINAL DATE OF DRAWING 2-7-57

DRAFTSMAN [signature] CHECKER S.E.

TRACER CHECKER

ENGINEER [signature] ENGINEER [signature]

SUBMITTED W. Knight ENG ORD CORPS

APPROVED BY ORDER OF THE CHIEF OF ORDNANCE [signature] ENG ORD CORPS

ADAPTER, TELESCOPE - REAR AIMING CIRCLE M-2

SCALE FULL UNIT WT —

ORDNANCE CORPS
DEPT OF THE ARMY
FRANKFORD ARSENAL
PHILA 37 PA

DWG SIZE C 7659829

SHEET 1 OF 1

C 7659830

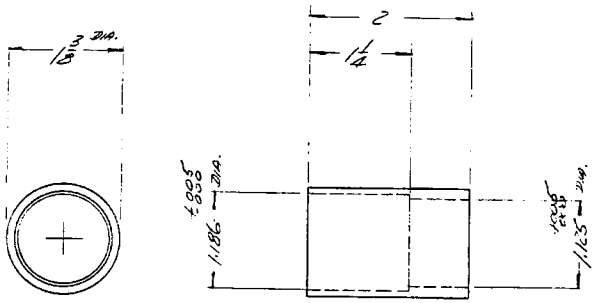

MAKE FROM ALUMINUM

SYM	DESCRIPTION	DATE	APPROVAL

REVISIONS

PHYSICAL PROPERTIES	
YP	
YS	
EL 2	
RA	
BH	
RH	

SEE ENGINEERING RECORDS

F16813/6

NEXT ASSY | USED ON

APPLICATION

~~DO NOT~~ ~~APPLY PART NO.~~

~~DO~~ ~~AS SPECIFIED~~

UNLESS OTHERWISE SPECIFIED DIMENSIONS ARE IN INCHES

TOLERANCES ON DECIMALS ±.002

ANGLES ± 1° FRACTIONS ± 1/64

MATERIAL

AS SPECIFIED

HEAT TREATMENT

FINAL PROTECTIVE FINISH

ORIGINAL DATE OF DRAWING 8-15-56

DRAFTSMAN FRANK CHECKER S.E.

TRACER CHECKER

ENGINEER J. Allen ENGINEER

SUBMITTED W. Knight

ORD CORPS

APPROVED BY ORDER OF THE CHIEF OF ORDNANCE

A.W. McNeale

ORD CORPS

ADAPTER
TOOL CLASS 'A'
USED ON TEST FIX.
FOR: AIMING CIRCLE
M-2

SCALE 1:1 UNIT WT

ORDNANCE CORPS
DEPT OF THE ARMY
FRANKFORD ARSENAL
PHILA 37, PA.

DWG SIZE C

7659830

SHEET 1 OF 1

1177-3

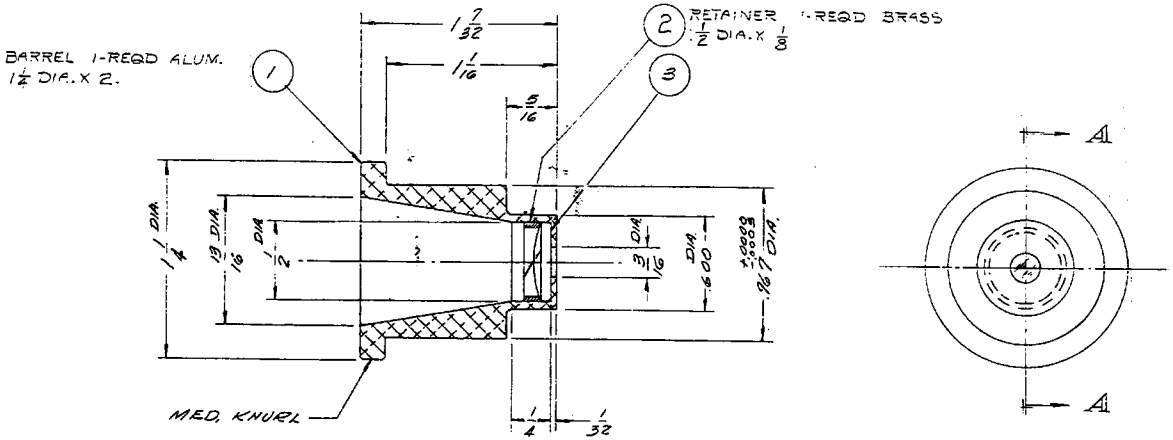

SECTION A-A

SCALE = 2:1

ELEMENT IN ACCORDANCE WITH MIL-O-13830
SURFACE QUALITY 80-50
SPHERICAL SURFACES POLISHED, RIM AND CHAMFERS GROUND.
CHAMFERS NOT TO EXCEED .010 (FACE WIDTH AT 45°)

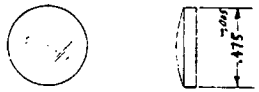

(3) LENS 1-REQ'D
OPTICAL GLASS GRADE C
JAN-G-174
SCALE - 2:1

ASSEMBLY

OPTICAL DATA

1	517-645	1.517	64.5	.070-.070	+41.360	∞
LENS	GLASS	n_D	V	d	R_1	R_2

EQUIVALENT F.L. (NOMINAL) = 80.00
BACK FOCAL LENGTH = 80.00 ± 2.50

SYM	DESCRIPTION	DATE	APPROVAL
A	ADDED DETAIL 3	3-21-56	

REVISIONS

PHYSICAL PROPERTIES	SEE ENGINEERING RECORDS
YP	
TS	
EL 2	
RA	
BH	FT681316 / FT681311
RH	NEXT ASSY / USED ON
	APPLICATION
	DO NOT ASSEMBLE INTO
	DO ASSEMBLE WITH

UNLESS OTHERWISE SPECIFIED DIMENSIONS ARE IN INCHES
TOLERANCES ON DECIMALS ± .002
ANGLES — FRACTIONS ± 1/64
MATERIAL AS SPECIFIED
HEAT TREATMENT
FINAL PROTECTIVE FINISH

ORIGINAL DATE OF DRAWING 3-20-56
DRAFTSMAN FRANK CHECKER S.E.
TRACER CHECKER
ENGINEER ENGINEER
SUBMITTED Walter Knight Jr. ORD CORPS
APPROVED BY ORDER OF THE CHIEF OF ORDNANCE A.W. The Real ORD CORPS

ADAPTER, TELESCOPE - FRONT AIMING CIRCLE M-2

SCALE 2:1 UNIT WT ——

FIRE CONTROL INSTRUMENT GROUP
ORDNANCE CORPS
DEPT OF THE ARMY
FRANKFORD ARSENAL
PHILA. 37, PA.

DWG SIZE C 7659871
SHEET 1 OF 1

7659871

F7659832 SHEET 1

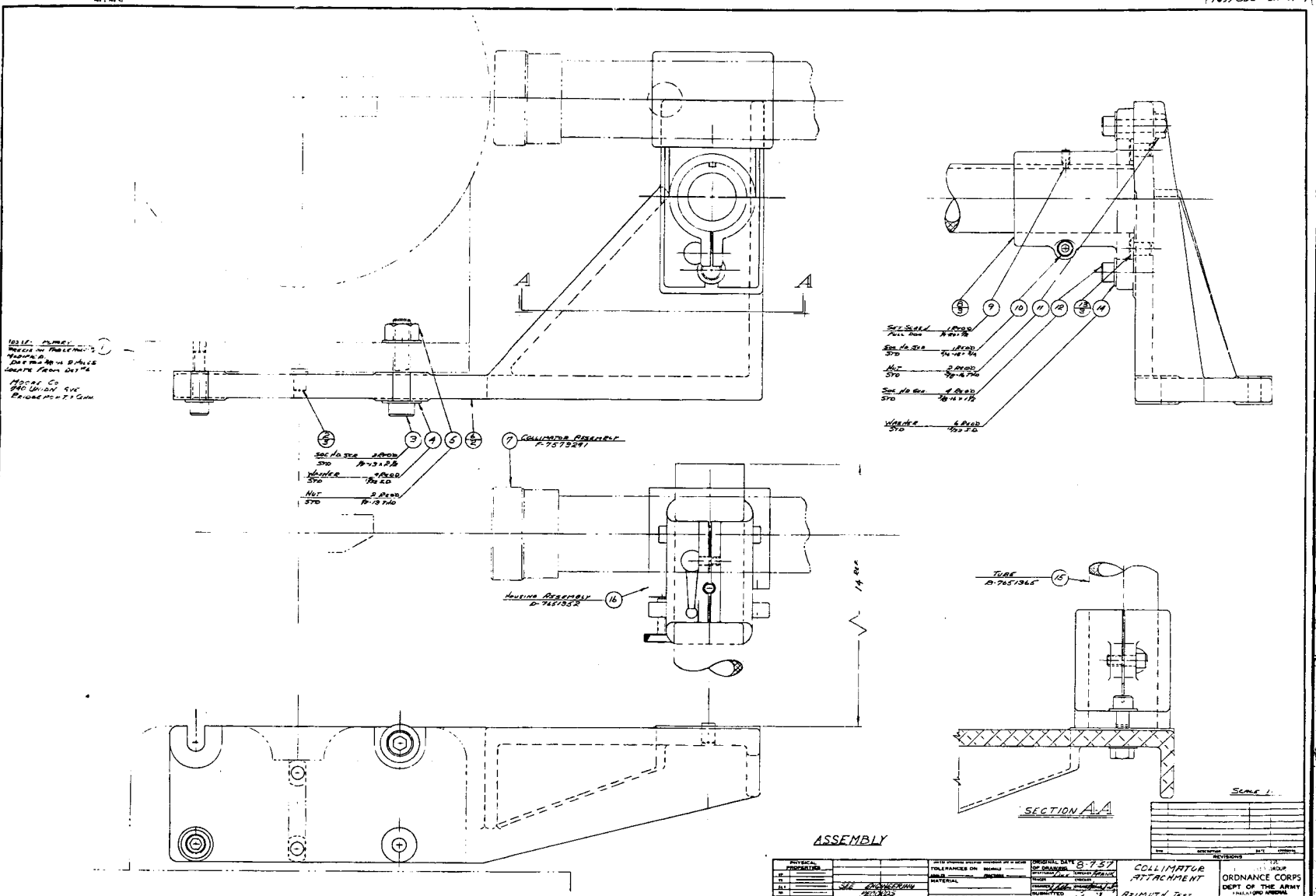

PHYSICAL PROPERTIES		TOLERANCES ON DECIMALS / FRACTIONS	ORIGINAL DATE 8-757	COLLIMATOR ATTACHMENT	ORDNANCE CORPS DEPT OF THE ARMY
	SEE ENGINEERING RECORDS	MATERIAL	DRAWN Frank	AZIMUTH TEST FIXTURE AIMING CIRCLE M-2	PHILADELPHIA ORDNANCE DISTRICT PHILA 3, PA.
	APPLICATION	HEAT TREATMENT	CHECKED		SIZE F — 7659832
		FINAL PROTECTIVE FINISH	SUBMITTED W. Knapp		SHEET 1 OF 2
			APPROVED Col. Ord. Dept.	SCALE FULL — UNIT WT	

F 7659832 SHEET 2

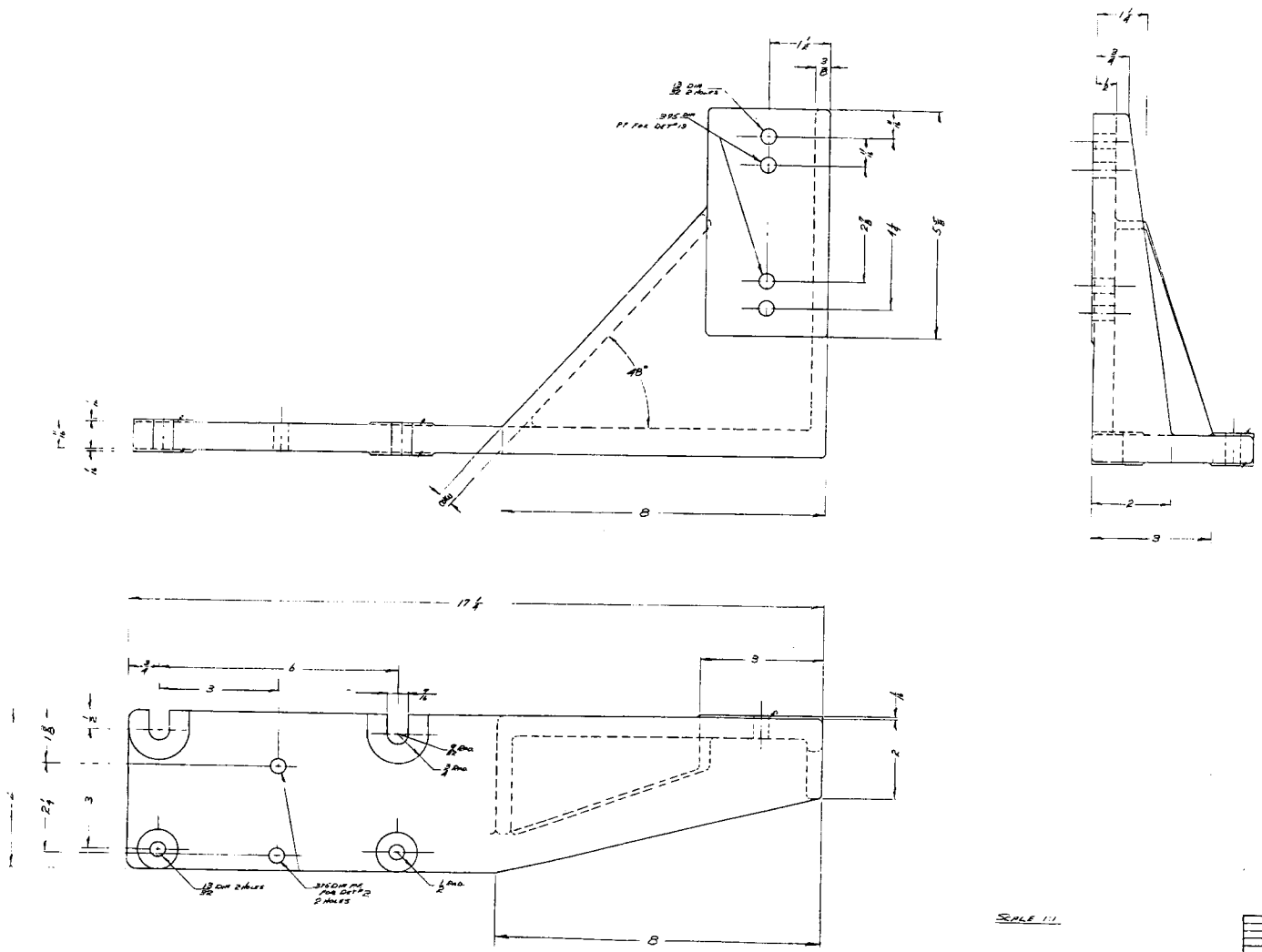

SCALE 1:1

6/4 MOUNTING BRACKET 1 PEOD
ALUMINUM CASTING

PHYSICAL PROPERTIES	SEE ENGINEERING RECORDS	TOLERANCES ON DIMENSIONS ±.005" ANGLES ±0°30' FRACTIONS ±1/64	ORIGINAL DATE OF DRAWING 8-7-57	COLLIMATOR ATTACHMENT AZIMUTH TEST FIXTURE AIMING CIRCLE M-2	ORDNANCE CORPS DEPT OF THE ARMY FRANKFORD ARSENAL PHILA 37, PA.
		MATERIAL AS SPECIFIED	SUBMITTED W. Knight		DWG NO. F 7659832
	APPLICATION	HEAT TREATMENT	APPROVED IN OBSERVANCE OF THE CHIEF OF ORDNANCE	SCALE FULL	SHEET 2 of 3
		FINAL PROTECTIVE FINISH			

REVISIONS

F7659832 SHEET 3

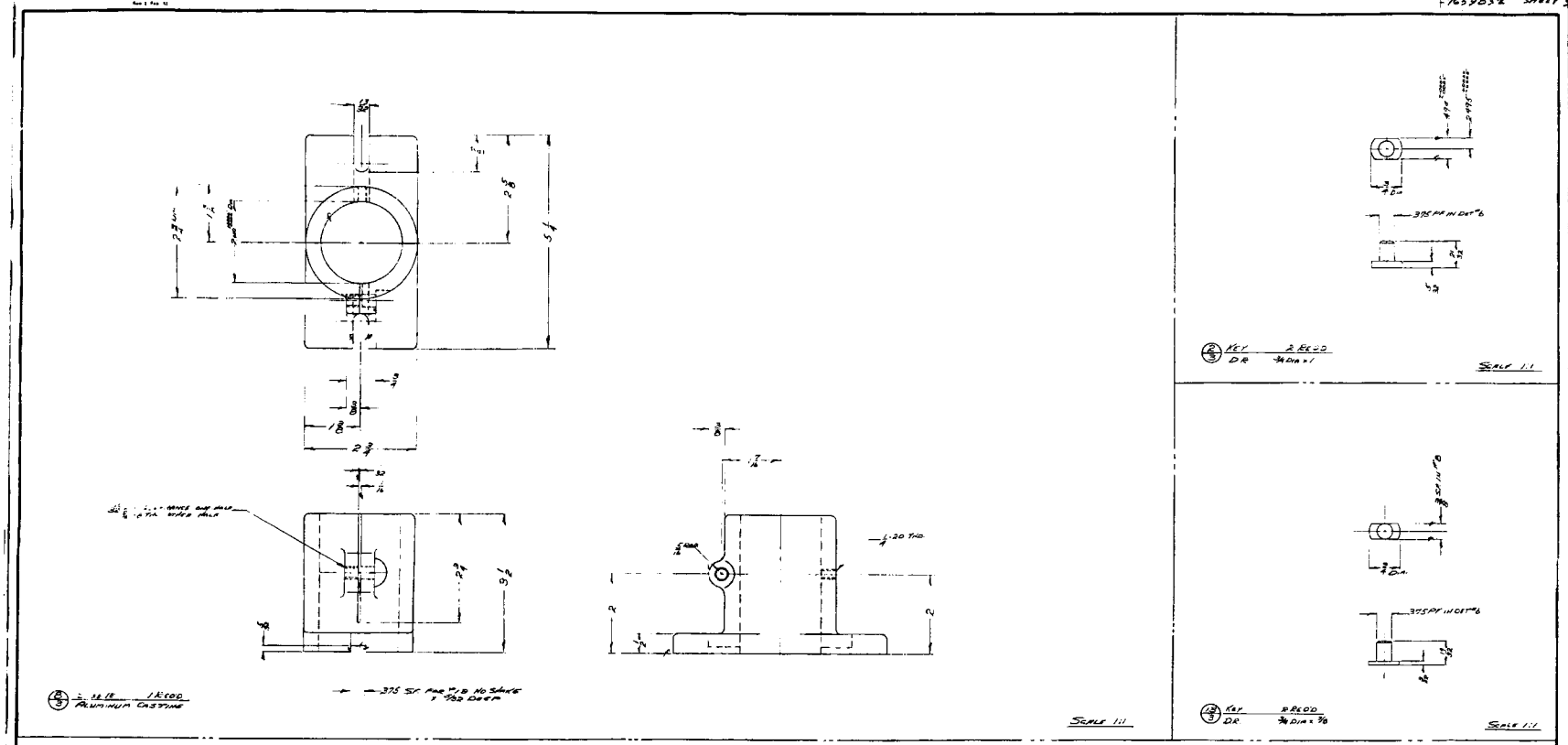

PHYSICAL PROPERTIES	SEE ENGINEERING RECORDS	TOLERANCES ON DECIMALS ±.005 FRACTIONS ±1/64	ORIGINAL DATE OF DRAWING 8-7-57	COLLIMATOR ATTACHMENT
		MATERIAL AS SPECIFIED		AZIMUTH TEST FIXTURE
		HEAT TREATMENT		AIMING CIRCLE M-2
	APPLICATION	FINAL PROTECTIVE FINISH		SCALE FULL

REVISIONS

ORDNANCE CORPS
DEPT OF THE ARMY
ENGINEERING DRAWING

F 7659832

SHEET 3 OF 3

F 7680631

ACCURACY REQUIREMENTS

ANY DIOPTER SETTING OF THE DIOPTOMETER SHALL AGREE WITH THE CORRESPONDING SCALE READING WITHIN ± 1/16 DIOPTER FOR MOTION OF THE OBJECTIVE LENS AND ± 1/4 DIOPTER FOR THE CORRESPONDING MOTION OF THE EYEPIECE.

DIOPTOMETER
LIST OF SPECIFICATIONS

LINE		SPECIFICATION NUMBER
1	DIOPTOMETER	
2	FIRE CONTROL MATERIEL: GENERAL SPECIFICATION GOVERNING MANUFACTURE AND INSPECTION OF	MIL-F-13926
3	PAINTING AND FINISHING OF FIRE CONTROL INSTRUMENTS	
4	GENERAL SPECIFICATIONS FOR	MIL-P-1200
5	MARKING OF SHIPMENTS	MIL-STD-129
6	ALUMINUM ALLOY, BARS, RODS, AND WIRE	QQ-A-268
7	BRASS, LEADED AND NON-LEADED COPPER-ZINC ALLOY RODS, BARS, SHAPES & FORGINGS	QQ-B-626
8	METALS; GENERAL SPECIFICATION FOR INSP. OF	QQ-M-151
9	COPPER-NICKEL-ZINC ALLOY, RODS, BARS, AND SHAPES	QQ-C-566
10	STEEL, CORROSION RESISTING; BARS AND FORGINGS	QQ-S-763
11	TUBING, ALUMINUM ALLOY, ROUND, SEAMLESS	WW-T-789
12	TUBING, BRASS, SEAMLESS	WW-T-791
13	GLASS, OPTICAL	AN-G-176
14	PLASTIC MATERIALS, MOLDED, THERMOSETTING	MIL-P-14

LIST OF DRAWINGS

LINE		DRAWING NUMBER	DRAWING NUMBER
1	ASSEMBLY	F7680631	A5185457
2			A5185458
3			A5185459
4			A5185460
5			A5185461
6			A5185462
7	EYEPIECE, ASSEMBLY	C7673624	
8		C7680629	
9	SYSTEM, OPTICAL	C7680630	A7680623
10			A7680624
11		B4263643	
12		B6174603	
13		B6174604	
14		B7673624	
15		B7680626	
16		B7680625	
17		B7680628	
18		B7680627	
19		B7680629	
20			
21			
22		A5033909	
23		A5045963	
24			
25			
26			
27		A5185491	
28		A5185492	

SECTION A-A

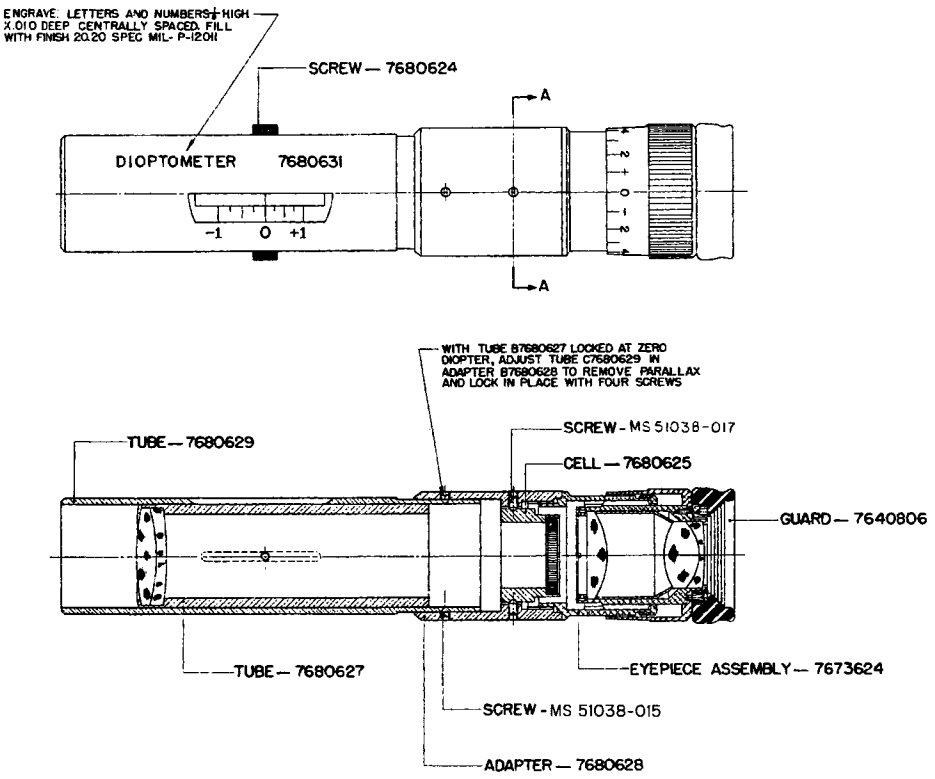

DESIGN ACTIVITY U.S. ARMY
ARMAMENT RESEARCH, DEVELOPMENT AND ENGINEERING CENTER
PICATINNY ARSENAL, NEW JERSEY 07806-5000

APPLICABLE DOCUMENTS
PARTS LIST- PL7680631

PART NO. 7680631
FSCM NO. 19200

LTR	DESCRIPTION	DATE	APPROVED
G	NOR 63K3000	63-05-15	
F	NOR 63K3000	63-02-20	
E	SEE ECO F07855	61-10-31	
D	SEE ECO F07810	61-10-31	
C	SEE ECO F06980	61-6-2	
B	ADDED NOTE	51-7-26	
A	ADDED ENGRAVED LETTERS AND NUMBERS	51-6-23	

PHYSICAL PROPERTIES		TOLERANCES ON	ORIGINAL DATE AUG 1, 1951
		MATERIAL	DRAWING APPROVED
		HEAT TREATMENT	SUBMITTED
		FINAL PROTECTIVE FINISH	APPROVED BY CHIEF OF THE DEPT OR AGENCY
		APPLICATION	DO NOT APPLY PART NO.

DIOPTOMETER

FIRE CONTROL INSTRUMENT GROUP
ORDNANCE CORPS
DEPT OF THE ARMY
PHILA. PA

SCALE 1:1 UNIT WT

F 7680631

SHT 1 OF 1

F 7681312 SHT 1

LINE NO	LIST OF DRAWINGS	DRAWING NUMBER
1	TEST FIXTURE	F 7681312
2	AIMING CIRCLE	SHTS 1 THRU 4
3		
4		
5		

ACCURACY REQUIREMENTS UNDER WHICH THIS FIXTURE IS DESIGNED.

A - .1834 DIMENSION TO BE MAINTAINED ON FULL CIRCUMFERENCE OF PARTS 5 & 6.
B - PART 3 OF SUBASSEMBLY 1 TO BE CONCENTRIC WITH 7 IN. DIA. OF PART 6 WITHIN .001 T.I.R.
C - BALL, PART 3 TO BE SLIP FIT (WITHOUT SHAKE) IN SOCKET.
D - TABLE PART 5 TO BE FREE TO TILT 3° IN ANY MERIDIAN.

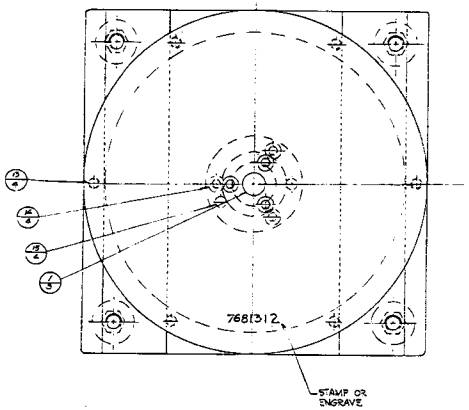

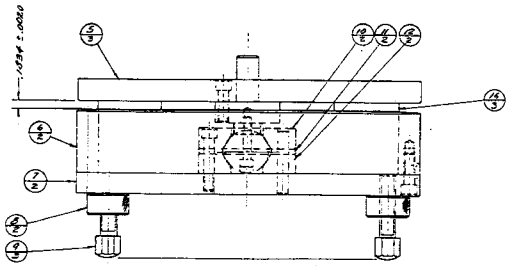

M

PHYSICAL PROPERTIES			
FIXT. LIST D8269612			
APPLICATION			
APPLY PART NO.			
TOLERANCES ON			
MATERIAL			
HEAT TREATMENT			
FINAL PROTECTIVE FINISH			
ORIGINAL DATE OF DRAWING 7-27-56			
SUBMITTED			
APPROVED			
SCALE 1:1	UNIT WT		

TEST FIXTURE
AIMING CIRCLE
ASSEMBLED VIEWS

FIRE CONTROL INSTRUMENT GROUP
ORDNANCE CORPS
DEPT OF THE ARMY
FRANKFORD ARSENAL
PHILA 37, PA

F 7681312

SHEET 1 of 4

F 7681312SHT2

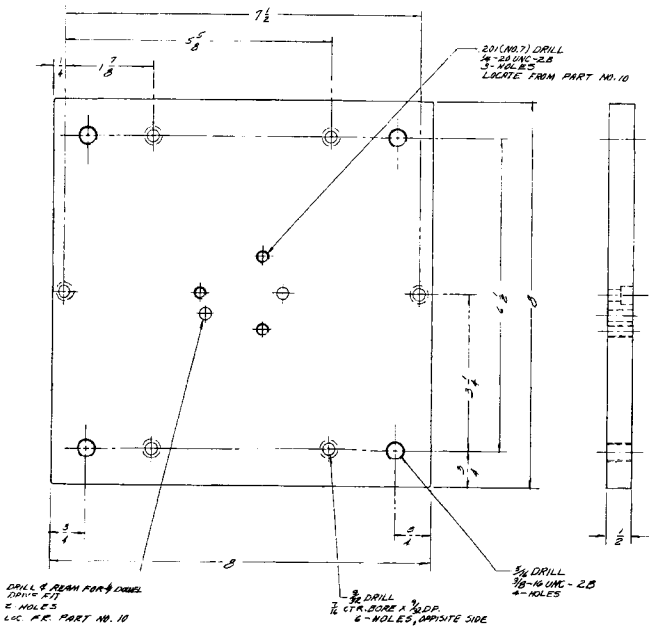

PART 7/1 BASE
ALUMINUM ALLOY - COML.
SCALE 1:1

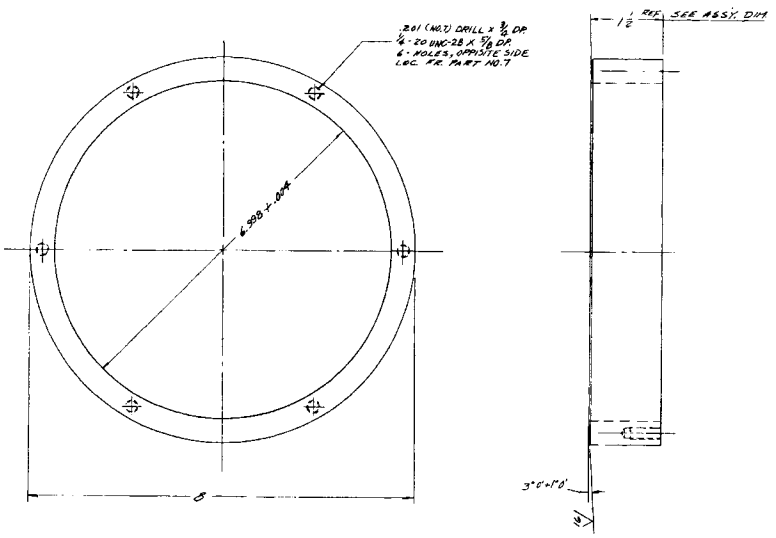

PART 6/1 RING
ALUMINUM ALLOY - COML.
SCALE 1:1

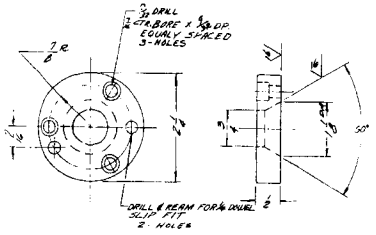

PART 10/1 CLAMP
STAINLESS STL. COML. TYPE 303
NON-MAGNETIC
SCALE 1:1

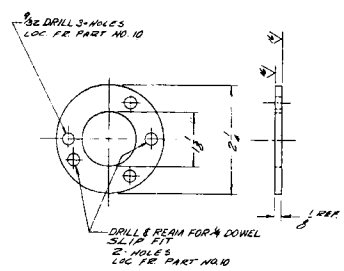

PART 11/1 SHIM
BRASS - COML.
SCALE 1:1

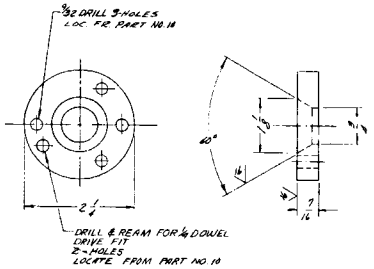

PART 12/1 BALL SEAT
STAINLESS STL. COML. TYPE 303
NON-MAGNETIC
SCALE 1:1

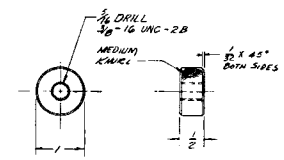

PART 9/1 KNOB
BRASS - COML.
SCALE 1:1

M

SYM	DESCRIPTION	DATE	APPROVAL

REVISIONS

PHYSICAL PROPERTIES

TOLERANCES ON	DECIMALS
SCALES 0°30'	FRACTIONS 1/64
MATERIAL	AS SPECIFIED
HEAT TREATMENT	
FINAL PROTECTIVE FINISH	

APPLICATION

NEXT ASSY	USED ON

ORIGINAL DATE OF DRAWING 7-27-55
DRAFTING 9/4/70 CHECKED DAT
TRACED CHECKED
ENGINEER CHECKED
SUBMITTED W. Kingler
APPROVED BY ORDER OF THE CHIEF OF ORDNANCE A. H. McNeale

TEST FIXTURE, AIMING CIRCLE

FIRE CONTROL INSTRUMENT GROUP
ORDNANCE CORPS
DEPT OF THE ARMY
FRANKFORD ARSENAL
PHILA 37, PA

SIZE F 7681312
SHEET 2 OF 4

SCALE — UNIT WT —

M

F 7681312 SHT 3

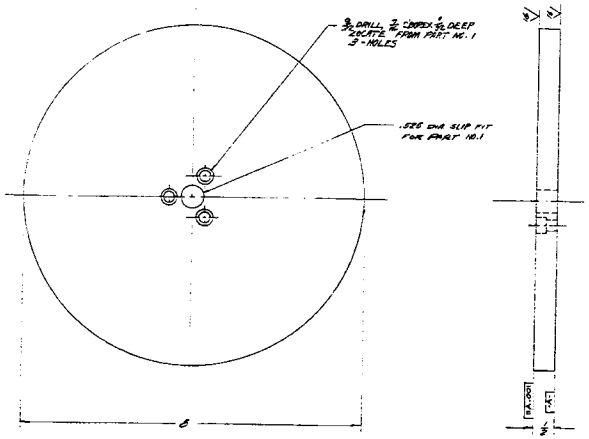

PART (3) PLATE
ALUMINUM ALLOY - COML.
SCALE 1:1

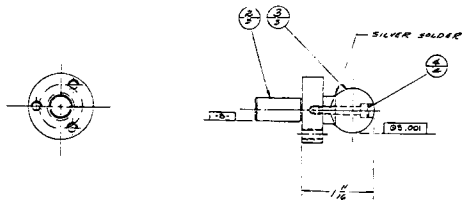

SUBASSEMBLY (1) PIVOT PIN
SCALE 1:1

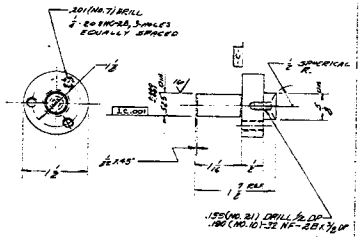

PART (2) PIN
STAINLESS STL - COML. TYPE 303 NON-MAGNETIC
SCALE 1:1

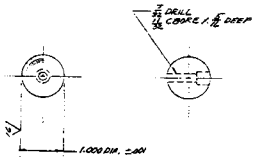

PART (3) BALL
STAINLESS STL NON-MAGNETIC
SCALE 1:1

SCALE 1:1

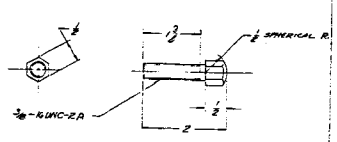

PART (4) SCREW
BRASS - COML.
SCALE 1:1

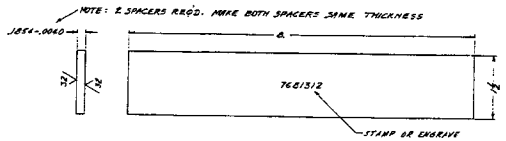

PART (14) SPACER
STAINLESS STL - COML. TYPE 303, NON-MAGNETIC
PASS ALL OVER EXCEPT AS NOTED
SCALE 1:1

REVISIONS			
SYM	DESCRIPTION	DATE	APPROVAL

PHYSICAL PROPERTIES		TOLERANCES ON DECIMALS ±	ORIGINAL DATE OF DRAWING 7.27.55
		AREAS PROJECTED ±	MODEL
		MATERIAL AS SPECIFIED	SUBMITTED
		HEAT TREATMENT	APPROVED
		FINAL PROTECTIVE FINISH	DRAWN BY
			TRACED BY
			CHECKED BY
			SCALE
			UNIT WT

TEST FIXTURE AIMING CIRCLE

FIRE CONTROL INSTRUMENT GROUP
ORDNANCE CORPS
DEPT OF THE ARMY
REMINGTON RAND INC.
PHILA 20, PA

SIZE F
7681312
SHEET 3 OF 3

F7681312 SHT 4

COL	1	2	3	4	5	6	7	8	9
LINE	DRAWING NUMBER	DRAWING NUMBER	SYMBOL	DETAILED ON SHEET NO.	CALLED OUT ON SHEET NO.	LIST OF MATERIAL DESCRIPTION	MAT'L	QUAN	APPLICATION
1	F7681312		1	3	3	PIVOT PIN ASSEMBLY		1	
2			2	3	3	1-PIN			
3			3	3	3	1-BALL			
4			4		3	1-SCREW, SOC. HD., .190(NO.10)-32NF-2A X 1.LG	[illegible]		3 TO 2
5									
6									
7									
8			5	3	1	PLATE		1	
9			6	2	1	RING		1	
10			7	2	1	BASE		1	
11			8	2	1	KNOB		4	
12			9	3	1	SCREW, SPECIAL		4	
13			10	2	1	CLAMP		1	
14			11	2	1	SHIM		1	
15			12	2	1	BALL, SEAT		1	
16			16	3	1	SPACER		2	
17									
18									
19			13		1	SCREW, SOC. HD 1/4-20UNC-2A X 3/4 LG.	[illegible]	9	(6) WITH 5
20									(3) 5 TO 2
21			14		1	SCREW, SOC. HD 1/4-20 UNC-2A X 1 1/4 LG.	[illegible]	3	10 THRU 12 TO 7
22			15		1	DOWEL 1/4 DIA X 1 1/2 LG.	[illegible]	2	10 THRU 12 TO 7
23									
24									
25									
26									
27									
28									

M

ITEM	DESCRIPTION	DATE	APPROVAL

REVISIONS

PHYSICAL PROPERTIES

TOLERANCES ON: INCHES / FRACTIONS

MATERIAL

HEAT TREATMENT

FINAL PROTECTIVE FINISH

APPLICATION

DO NOT APPROVE AND

ORIGINAL DATE OF DRAWING 7-27-55

SUBMITTED

APPROVED

M TEST FIXTURE, AIMING CIRCLE LIST OF MATERIALS

FIRE CONTROL INSTRUMENT GROUP ORDNANCE CORPS DEPT OF THE ARMY PANAMETRIC REGIONAL AVILA 37, PA

DWG SIZE F 7681312

SCALE

UNIT WT

SHEET 4 OF 4

M

SYM	DESCRIPTION	DATE	APPROVAL
E	NOR F8A0004/79-03-21 REPLACES REV "D" WITH CHANGE	79-05-14	TS
F	NOR D7Q2003/870415	890619	AAE

DRAWING SIZE F (ARRADCOMR 70-12)

SET UP

1.0 PLACE ADAPTER "A" ON PRECISION INDEX TABLE "B" WHICH IS ITSELF PLACED ON LEVELING PLATE "C" AND SECURED WITH THE HAND WHEEL BETWEEN THE LEVELING SCREWS "D" WHICH FORM THE BASE OF THE LEVELING TRIANGLE.

2.0 ORIENT ADAPTER "A" SO THAT HAND WHEEL "L" IS OVER COLLIMATOR BRACKET "M" AND LOCK WITH CLAMP "N".

3.0 THE ELEVATION TARGET MUST BE LOCATED PRECISELY 82 INCHES FROM THE STEEL BALL "K" OF THE ADAPTER "A" (SEE 6.0) TO SHORTEN THE TELESCOPE FOCAL LENGTH TO VIEW THE ELEVATION TARGET. IT WILL BE NECESSARY TO FIT ADAPTER, C7659831 TO THE OBJECTIVE END OF THE TELESCOPE.

4.0 VISUALLY ALINE THE LEVELING PLATE WITH TABLE AND ADAPTER SO THAT APEX OF THE LEVELING TRIANGLE FORMED BY THE FRONT LEVELING SCREW IS IN THE PLANE OF THE ELEVATION TARGET.

5.0 USING A 10" SENSITIVITY SPIRIT LEVEL PLACED ON PLATE "E" LEVEL THE ADAPTER AND TABLE WITH LEVELING SCREWS "D" AND LOCK WITH LOCK NUTS "F".

6.0 USING A SURVEYORS TRANSIT (OR LEVEL) SET THE HEIGHT OF PLATE "E" 6.841 INCHES BELOW THE ZERO POINT OF THE ELEVATION TARGET. ALSO SET COLLIMATOR "G" USING LOCK "I" AND SCREW "J" SO THAT THE COLLIMATOR RETICLE IS LEVEL AND SQUARE WITH THE TRANSIT RETICLE.

7.0 AGAIN USING THE TRANSIT (OR LEVEL) AND PLUMB LINE, ALINE THE STEEL BALL "K" WITH THE PLANE OF THE ELEVATION TARGET.

8.0 USING AN AIMING CIRCLE M-2, OR M2A2 MOUNTED IN THE ADAPTER "A" AS DESCRIBED IN OPERATION INSTRUCTIONS, ADJUST MICROSCOPE "S" TO VIEW THE AIMING CIRCLE UPPER AZIMUTH MICROMETER SCALE BY LOCKING AT DESIRED HEIGHT BY SCREW KNOB "T" AND IN LATERAL POSITION BY SCREW KNOB "U". FINE HEIGHT ADJUSTMENT IS MADE BY LOCKING THE MICROSCOPE EYEPIECE IN THE POSITION SHOWN WITH LOCK SCREW "V" AND THEN USING MICROMETER KNOB "W" TO OBTAIN FINE VERTICAL ADJUSTMENT OF THE MOVABLE RETICLE LINE TO BRING IT INTO COINCIDENCE WITH THE GRADUATIONS OF THE AZIMUTH MICROMETER SCALE AND ITS INDEX.

9.0 THE DEFINITION TARGET SHALL BE OF THE PATTERN ILLUSTRATED IN MIL-D-13830. THE IMAGES SHALL BE VIEWED WITH THE AID OF A FOUR POWER AUXILIARY TELESCOPE SCALED IN DIOPTERS.

TARGET FORMULAS

1. ELEVATION TARGET
A.) THE DISTANCE FROM THE HORIZONTAL ZERO ELEVATION LINE TO ANY CHECK POINT IS OBTAINED FROM THE FOLLOWING FORMULA:
L=D TAN A
WHEN L=DISTANCE FROM ELEVATION ZERO TO CHECK POINT
D=DISTANCE FROM TARGET CENTER TO CENTER OF TELESCOPE BEARING OF 80 INCHES
A=ANGLE OF CHECK POINT
B.) THE PERMISSIBLE ERROR AT EACH ELEVATION CHECK POINT IS THE SAME EXPRESSED IN MILS; HOWEVER, AN ERROR INTRODUCED AT THE HIGHER ELEVATION ANGLES REQUIRES A GREATER LINE THICKNESSES TO SHOW THE SAME ANGULAR TOLERANCE LIMITS. LINE THICKNESSES ARE CALCULATED FOR ANY TARGET DISTANCE AND CHECK POINT ACCORDING TO THE FOLLOWING FORMULA:
LINE THICKNESS = $L_2 - L_1$
WHEN L_1 = D TAN (A − .75 MIL)
L_2 = D TAN (A + .75 MIL)
L, D, & A ARE THE SAME TERMS AS USED ABOVE.
C.) TOTAL TARGET HEIGHT FOR M2 IS CALCULATED ACCORDING TO THE FORMULA H = D (TAN 830 MILS AND 430 MILS) = D X 1.51 APPROXIMATELY.
TOTAL TARGET HEIGHT FOR M2A2 IS CALCULATED ACCORDING TO THE FORMULA H = D (TAN 1100 MILS AND 430 MILS) = D X 2.32 APPROXIMATELY.
WHEN H = TARGET HEIGHT IN INCHES AND D = TARGET DISTANCE IN INCHES

2. ALTERNATE ELEVATION TARGET: IN ORDER TO ELIMINATE THE USE OF A FLAT TARGET REQUIRING DIFFERENT LINE THICKNESS AT VARIOUS ELEVATION ANGLES, IT IS POSSIBLE TO ACCURATELY PLACE A SERIES OF TARGETS AT A PREDETERMINED RADIUS OF 80 INCHES AND HAVE ALL THE TARGET LINES IDENTICAL. THE TARGET AT ELEVATION ZERO REQUIRES AN ADDITIONAL TARGET TO CHECK RETICLE PLUMB SINCE THE REGULAR TARGET SIZE IS TOO SMALL TO COVER THE DISTANCE BETWEEN ± 80 MILS AS ETCHED ON THE TELESCOPE RETICLE. A SEPARATE PLUMB LINE IS ALSO REQUIRED. ALSO A CIRCLE REPRESENTING ± 10 MILS SHOULD BE POSITIONED TO THE LEFT OF ELEVATION ZERO FOR THE OPEN SIGHT CHECK. SINCE THE TELESCOPE IS FOCUSED FOR 80 YARDS, THE CENTER OF THE CIRCLE SHOULD OFFSET THE SAME DISTANCE FROM ELEVATION ZERO AS THE CENTER OF THE OPEN SIGHT IS OFFSET FROM THE CENTER OF THE TELESCOPE. NOTE: TO PRODUCE A SHARP IMAGES AT CLOSE TARGET DISTANCES, THE TELESCOPE WILL NEED EITHER AN EXTERNALLY ATTACHED AUXILIARY LENS OF APPROXIMATELY 3/8 DIOPTER OR A SUITABLE LENS CAP WITH A SMALL APERTURE.

3. PARALLAX TARGET: THE CENTERLINE REPRESENTS THE ALINING POINT FOR THE CENTER OF THE TELESCOPE RETICLE. THE OUTER LINES MARK THE LIMITS OF PERMISSIBLE PARALLAX LINE THICKNESSES AND TARGET DIMENSIONS ARE CALCULATED FOR A TARGET DISTANCE OF 30 YDS AS REQUIRED BY THE DETAIL SPECIFICATION.

4. RESOLUTION TEST TARGET: THE TARGET IS MADE FROM THE "28" BLOCKS OF NATIONAL BUREAU OF STANDARDS RESOLUTION TEST CHARTS. THESE BLOCKS HAVE 28 BLACK BARS PER 25 MILLIMETERS, AND THE DISTANCE BETWEEN CENTERS OF THE BARS SUBTENDS THE REQUIRED RESOLUTION ANGLE OF 14 SECONDS AT A TARGET DISTANCE OF 43 FT, 2 INCHES. SINCE THIS ANGLE WILL CHANGE FOR ANY OTHER TARGET DISTANCE IT IS IMPORTANT TO USE THIS TARGET AT THE PROPER DISTANCE.
A.) TO DETERMINE DEFINITION TARGET DISTANCE FOR A RESOLUTION ANGLE REQUIRED BY THE SPECIFICATION, USE THE FOLLOWING FORMULA:

$$TD = \frac{S_1 \cdot D}{S_2}$$

WHEN TD = NEW TARGET DISTANCE (IN FEET)
S_1 = KNOWN SECONDS OF ARC FOR TARGET BLOCKS BEING USED (SEE CHART)*
D = KNOWN TARGET DISTANCE CORRESPONDING TO S_1 (IN FEET) (SEE CHART)*
S_2 = REQUIRED NUMBER OF SECONDS (SEE SPECIFICATION)

*THIS CHART IS FOUND ON PAGE 9 OF NATIONAL BUREAU OF STANDARDS CIRCULAR 533
TITLE: "METHOD FOR DETERMINING THE RESOLUTION POWER OF PHOTOGRAPHIC LENS"

NOTE. ANGULAR ERRORS ARE CHECKED IN CONJUNCTION WITH COLLIMATOR F7573291.

OPERATION

1.0 MOUNT THE AIMING CIRCLE ON TEST ADAPTER "A".

1.1 WITHDRAW PIN "O" AND DEPRESS ARM "P".

1.2 POSITION AIMING CIRCLE WITH AXIS OF THE LOWER AZIMUTH SCREW KNOBS PARALLEL TO THE AXIS OF THE HAND WHEEL "L" AND WITH THE ARM "P" EXTENDING BETWEEN THE TWO LEVELING KNOBS OF THE AIMING CIRCLE WHEN THE NOTATION PAD OF THE AIMING CIRCLE BASE PLATE IS TURNED AWAY FROM THE COLLIMATOR "G".

1.3 INSERT BALL "K" INTO CENTER LOCATING HOLE OF AIMING CIRCLE BY ROTATING ARM "P" AND SECURE BY REINSERTING PIN "O".

1.4 TIGHTEN CLAMPS "Q" AGAINST THE AIMING CIRCLE BASE PLATE TO SECURE.

2.0 LEVEL THE AIMING CIRCLE.

2.1 LEVEL THE AIMING CIRCLE WITH ITS OWN LEVELING SCREWS TO THE HORIZONTAL ZERO LINE OF THE TARGET BY COUNTER ROTATION OF THE UPPER AZIMUTH SCREW OF THE AIMING CIRCLE AND THE INDEX TABLE "B". A LEVEL LINE OF SIGHT IS MAINTAINED BY KEEPING THE PRE-SET LEVEL VIAL OF THE TELESCOPE CENTERED DURING LEVELING.

2.2 THE AIMING CIRCLE MAY BE ELEVATED OR LOWERED TO BRING THE VERTICAL ZERO POSITION INTO COINCIDENCE WITH TARGET ZERO BY THE HAND WHEEL "L".

3.0 OPERATING TEST PROCEDURE.

OPERATION IS DESCRIBED BELOW UNDER PARAGRAPH NUMBERS APPEARING IN PURCHASE DESCRIPTION MIL-A-13338.

3.8.1 TUBULAR BUBBLE: THE AIMING CIRCLE IS ROTATED BY THE UPPER AZIMUTH SCREW AND THE TUBULAR AZIMUTH BUBBLE OBSERVED FOR MAINTENANCE OF CENTRALITY.

3.8.2 CIRCULAR BUBBLE DURING CHECK OF 3.8.1 THE CIRCULAR BUBBLE SHOULD ALSO BE OBSERVED FOR CENTRALITY.

3.9.1 ORIENTING MECHANISM: COUNTER ROTATE THE AIMING CIRCLE BY THE LOWER AZIMUTH KNOB AND THE INDEX TABLE "B". OBSERVE THE HORIZONTAL TARGET ZERO THROUGH THE TELESCOPE FOR DEVIATION FROM ZERO ON COLLIMATOR "G".

3.9.2 RETICLE PLUMB: OBSERVE VERTICAL TARGET LINE FOR PLUMB. DEVIATION CAN BE MEASURED WITH THE INDEX TABLE VERNIER SCALE "R".

3.9.4 PLUMB TRAVEL: MOVE VERTICAL LINE OF SIGHT AIMING CIRCLE WITH ELEVATION KNOB. OBSERVE A PLUMB LINE FOR PLUMB TRAVEL. DEVIATION CAN BE MEASURED AS ABOVE.

3.9.4.1 ELEVATION LIMITS: COINCIDENT WITH TEST OF 3.9.4 OBSERVE THE LIMITS OF ELEVATION ROTATION.

3.9.5 CIRCLE ERROR: SET THE UPPER AZIMUTH KNOB TO ZERO BY CLOCKWISE ROTATION OF THE AIMING CIRCLE. SET THE INDEX TABLE "B" TO ZERO. BRING LINE OF SIGHT TO CENTER ON THE COLLIMATOR RETICLE WITH LOWER AZIMUTH KNOB. OFFSET THE INDEX TABLE AN AMOUNT EQUAL TO A WHOLE MIL IN A CLOCKWISE DIRECTION. ROTATE THE UPPER AZIMUTH KNOB TO THE SAME WHOLE MIL MARK ON THE MICROMETER WITH THE INSTRUMENT REVOLVING IN A COUNTER-CLOCKWISE DIRECTION USING THE MICROSCOPE MICROMETER "W" TO ALIGN THE AIMING CIRCLE UPPER AZIMUTH INDEX AND MICROMETER SCALE GRADUATION. AZIMUTH ERROR CAN THEN BE READ BY OBSERVING THE AMOUNT OF MOVEMENT REQUIRED IN INDEX TABLE MICROMETER SCALE "R" TO RECENTER THE TELESCOPE RETICLE WITH THE COLLIMATOR RETICLE.

3.9.6 ELEVATION ERROR: CHECK ELEVATION ERROR BY SETTING MIL READINGS ON THE ELEVATION MICROMETER CORRESPONDING TO ELEVATION OF TARGET STOPS. ZERO SHOULD BE SET WITH DEFLECTION OR ELEVATION OF THE LINE SIGHT OPPOSED TO THE DIRECTION OF MOTION REQUIRED BY THE TARGET IN ORDER TO INCLUDE BACKLASH.

3.9.7 BACKLASH.

BACKLASH OF ELEVATION AND UPPER AZIMUTH MOVEMENTS ARE CHECKED BY MEASURING ANGLES AS INDICATED IN 3.9.6 BUT WITH THE ZERO SET IN OPPOSITE DIRECTIONS. THE DIFFERENCE BETWEEN THE READINGS IS BACKLASH.

BACKLASH OF THE LOWER AZIMUTH MOVEMENT IS DONE IN A SIMILAR MANNER EXCEPT THAT IT IS NECESSARY TO AFFIX FIXTURE D7647160 TO THE LOWER AZIMUTH KNOB AS A ZERO REFERENCE WITH THE VERNIER SCALE RESTING ON THE OPEN LEFT COVER OF THE LOWER AZIMUTH KNOB.

3.10 LIFT.

LIFT IS DETERMINED BY REVERSING EACH AZIMUTH KNOB AND OBSERVING THE LIFT OF THE LINE OF SIGHT ON THE HORIZONTAL TARGET LINE.

3.11 SIDE PLAY.

SIDE PLAY IS DETERMINED BY REVERSING THE ELEVATION MICROMETER KNOB AND NOTING THE HORIZONTAL MOVEMENT OF THE LINE OF SIGHT.

3.12 PARALLAX.

ALINE THE TELESCOPE LINE OF SIGHT WITH A TARGET SET AS 30 YDS. AND A SECOND AT 150 YDS. PARALLAX IS NOTED BY MOVING THE HEAD FROM SIDE TO SIDE.

3.13 DEFINITION.

THE DEFINITION TARGET IS VIEWED WITH THE AID OF A FOUR POWER TELESCOPE (DIOPTOMETER F7680631) HELD TO THE AIMING CIRCLE TELESCOPE BY MEANS OF ADAPTER C7659830. TARGET MUST BE RESOLVED IN ALL QUADRANTS.

3.14 OPEN SIGHT. ALINE TELESCOPE LINE OF SIGHT WITH THE CENTER OF THE OPEN SIGHT TARGET AND COMPARE FOR COMPLIANCE.

LIST OF DRAWINGS	
F7681321	INSTRUCTION SHEET
F7681322	PLATE - LEVELING
F7681311	ADAPTER
F7573291	COLLIMATOR
F7659832	COLLIMATOR ATTACHMENT
F7680631	DIOPTOMETER
C7681323	CLAMP
D7647160	FIXTURE, BACKLASH
C7659829	ADAPTER
C7659830	ADAPTER
C7659831	AUXILIARY LENS

E	F
SHEET 2	SHEET 1

REVISION STATUS OF SHEETS

NEXT ASSY	USED ON	MECHANICAL PROPERTIES	DO NOT SCALE DRAWING
APPLICATION		YP / TS / ELG / RA / BH / RH	UNLESS OTHERWISE SPECIFIED DIMENSIONS ARE IN INCHES. TOLERANCES ON DECIMALS ± FRACTIONS ± ANGLES ±

ORIGINAL DATE OF DRAWING 58-08-28
DRAFTSMAN / CHECKER / ENGR / ENGR

U S ARMY ARMAMENT RESEARCH AND DEVELOPMENT COMMAND, DOVER, NEW JERSEY 07801

FINAL TEST INSTRUCTION SHEET AND LIST OF DRAWINGS

SIZE	CODE IDENT NO.	
F	19200	7681321
SCALE —	UNIT WT.	SHEET 1 OF 2

REVISIONS			
SYM	DESCRIPTION	DATE	APPROVAL
E	PRODUCTION RELEASE EPR F8A 0004/79-03-21	79-05-14	JB

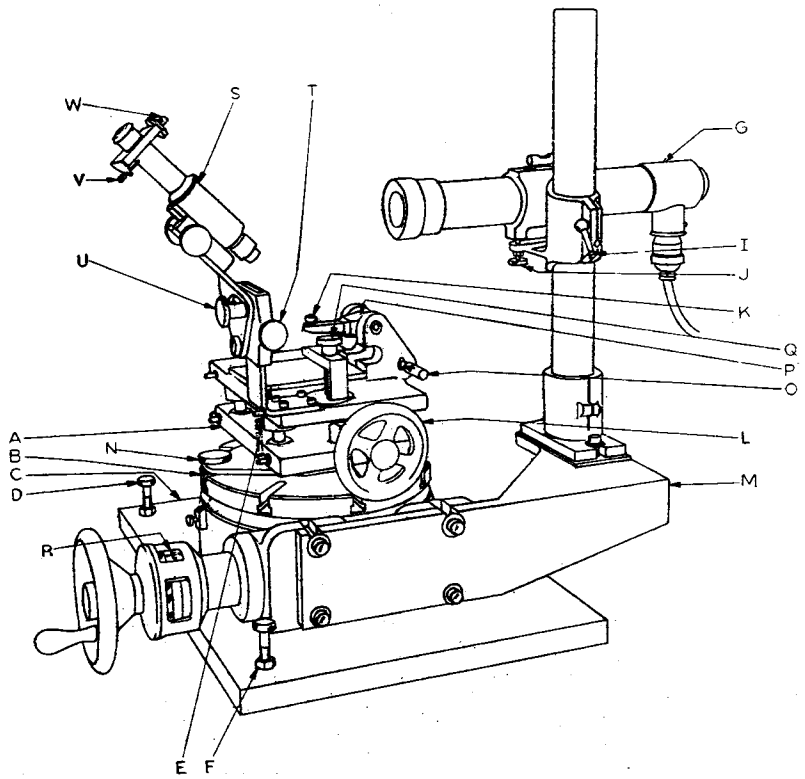

NEXT ASSY	USED ON		
APPLICATION			

MECHANICAL PROPERTIES: YP, TS, EL2, RA, BH, RH

DO NOT SCALE DRAWING
UNLESS OTHERWISE SPECIFIED
DIMENSIONS ARE IN INCHES
TOLERANCES ON DECIMALS ±
FRACTIONS ± ANGLES ±

ORIGINAL DATE OF DRAWING 58-08-28
DRAFTSMAN | CHECKER
ENGR | ENGR
ENGR JB | ENGR
J.H. Wiland
J. Bourdian

U S ARMY ARMAMENT RESEARCH AND DEVELOPMENT COMMAND
DOVER, NEW JERSEY 07801

FINAL TEST INSTRUCTION SHEET AND LIST OF DRAWINGS

SIZE	CODE IDENT NO.	
F	19200	7681321
SCALE —	UNIT WT.	SHEET 2

LIST OF MATERIAL

LINE	DRAWING NUMBER	PART NUMBER	SYMBOL	DETAILED ON SHEET NO.	CALLED OUT ON SHEET NO.	DESCRIPTION	MATL	QUAN	APPLICATION
1	F7687113				-3	NUMBER ASSEMBLY			
2				2	3	1- PLUG, SET UP			
3				3	3	2- SPRING			
4				4	3	3- SCREW, SOC HD CAP .190 (NO 10)-32 NF-2A X 3/8 LG			
5				5	3	4- PIN, DOWEL 1/8 DIA. X 5/8 LG.			
6									
7				6	4	2	BASE		
8				7	4	2	ANGLE		
9				8	4	2	PLATE		1
10				9	4	2	RING, LOCATING		1
11				10	4	2	CLAMP		1
12				11	5	2	BUSHING, LOCATING		1
13				12	5	2	BRACKET, SIGHT		1
14				13	5	2	HOLDER		1
15				14	4	2	ANGLE, SUPPORT		1
16				15	4	2	ANGLE, SUPPORT		1
17				16	3	2	SCREW, SPECIAL		1
18				17	5	2	PLATE, IDENTIFICATION		1
19				18		2	SCREW, QUARTER TURN	⚠	2
20				19		2	PIN, DOWEL 1/8 DIA. X 1" LG.	STEEL	2 IN 8
21				20		2	PIN, DOWEL 1/8 DIA. X 1 1/4 LG.	STEEL	2 THRU 7 IN 6
22				21		2	PIN, DOWEL 3/16 DIA. X 1 LG.	STEEL	2 THRU 3 IN 7
23				22		2	SCREW, SOC HDLESS CUP 10-32 NF-2A X 3/8 LG.	STEEL	2 THRU 5 IN 7
24				23		2	SCREW, SOC HD CAP 5/16-18 NC-2A X 1 1/8 LG.	STEEL	2 THRU 7 IN 6
25				24		2	SCREW, SOC HD CAP 1/4-20 NC-2A X 1 1/4 LG.	STEEL	4 THRU 10 IN 6
26				25		2	SCREW, SOC HD CAP 3/4-16 NC-2A X 1 LG.	STEEL	4 THRU 11 IN 6
27				26		2	SCREW, SOC HD CAP 5/16-18 NC-2A X 1 1/2 LG.	STEEL	3 THRU 8 IN 7
28				27		2	PIN, DOWEL 1/4 DIA X 1 3/4 LG	STEEL	2 THRU 15 IN 7
29				28		2	SCREW, SOC HD CAP .125 NO. 3) 48 NF-2A X 1/4 LG	STEEL	4 THRU 17 IN 6
30				29		2	REFLECTOR	OPTICAL GLASS	1
31									

⚠ SCREW, QUARTER TURN M.T. MORTON MACHINE WORKS 2421 WOLCOTT ST. FERNDALE 20, MICHIGAN QT-11 CYANIDE HARDENED OR SUBSTANTIAL EQUAL

LIST OF DRAWINGS

F7687113.SH1

1	TEST FIXTURE AIMING CIRCLE	F7687113	50		
2		5 SHEETS	51		
3	COLLIMATOR, PROJECTOR	F7573291	52	AT5T2677	
4			53	AT5T2678	
5			54	AT5T2686	
6	OPTICAL SYSTEM	C7572449	55	AT5T2687	
7			56	AT5T2688	
8			57	AT5T2700	
9			58	AT5T2701	
10	COLLIMATORY ASSEMBLY	D7573435	59	AT5T2703	
11		SHEET 1	60	AT5T2704	
12	LIST OF MATERIAL	D7573433	61	AT5T2705	
13		SHEET 2	62	AT5T2706	
14			63	AT5T270T	
15			64		
16		C7572446	65		
17		C7572447	66	AT5T2726	
18		C7572462	67	AT5T2727	
19	HOUSING ASSEMBLY, LAMP	C7571485	68	AT5T2728	
20			69	AT5T2729	
21			70	AT5T2730	
22	OBJECTIVE ASSEMBLY	B7571477	71	AT5T2732	
23		B7571476	72	AT5T2736	
24		B7571478	73	AT5T2738	
25			74	AT5T2739	
26		B7571482	75	AT5T2785	
27	HOLDER ASSEMBLY	B7571489	76	AT5T2G3	
28	CABLE ASSEMBLY	B7571495	77	AT5T2G4	
29			78		
30			79		
31		B7571483	80		
32	WINDOW ASSEMBLY	B7571500	81	BCUX2	
33	EYE PIECE ASSEMBLY	B7571598	82	BCUX43	
34		B7571600	83		
35		B7572487	84	BFDKI	
36			85		
37			86		
38		A5043960	87	DTCX3	
39		A5043961			
40					
41		A5046315			
42					
43		A5182861			
44					
45					
46		A5205598			
47					
48					
49					

SA	B	B	B	B
SH 1	SH 2	SH 3	SH 4	SH 5

REVISION STATUS OF SHEETS

CODE IDENT NO. 19200

U S ARMY ARMAMENT RESEARCH AND DEVELOPMENT COMMAND
DOVER, NEW JERSEY 07801

REVISIONS			
LTR	DESCRIPTION	DATE	APPROVED
A		NOV 10 2000	R-03-30

PHYSICAL PROPERTIES

SEE ENGINEERING RECORDS

TOLERANCES ON DECIMALS ---

MATERIAL AS NOTED

HEAT TREATMENT AS NOTED

FINAL PROTECTIVE FINISH AS NOTED

ORIGINAL DATE OF DRAWING 10-19-56

APPROVED

SCALE

TEST FIXTURE AIMING CIRCLE

7687113

UNIT WT

E7687113

FINAL PROTECTIVE FINISH

1. ALL EXPOSED SURFACES EXCEPT BEARING SURFACES SHALL BE PRIMED AND PAINTED, COLOR (2635) SPEC. TT-C-595
2. ALL FUNCTIONAL STEEL PARTS EXCEPT BEARING SURFACES BLACK PENTRATE FINISH
3. ALL BEARING SURFACES SHALL BE COATED WITH SOCONY VACUUM VISCOLITE OIL E. VISCOSITY 60 SECONDS, SAYBOLT, AT 100°F. OR APPROVED SUBSTANTIAL EQUAL.

ACCURACY REQUIREMENTS

WITH BUSHING "E", WRENCH "D" AND CLAMP "L" REMOVED, THE FOLLOWING REQUIREMENTS SHALL BE MET:—

1.— THE ANGLE FORMED BY DATUM LINE "DD" ESTABLISHED BY "B", "C" AND "F" AND DATUM LINE "EE" SHALL BE 90°±0°0'15".
2.— THE ANGLE FORMED BY SURFACE "O" AND SURFACE "P" SHALL BE 90°±0°0'15".
3.— THE ANGLE FORMED BY SURFACE "Q" AND SURFACE "N" SHALL BE 90°±0°0'15".
4.— THE ANGLE FORMED BY SURFACE "P" AND SURFACE "N SHALL BE 90°±0°5'0".
5.— WITH BUSHING "E" INSERTED INTO PLATE "F," SHAKE AT THE OPPOSITE END OF THE KNURL SHALL NOT EXCEED .0005 T.I.R.
6.— WITH MIRROR ASSEMBLY "K" LOCATED IN RING "M" (MIRROR FACING PLATE "F") AND HELD IN PLACE BY CLAMP "L", THE ANGLE FORMED BY THE MIRROR SURFACE AS MEASURED HORIZONTALLY ALONG DATUM LINE "EE" AND DATUM LINE "DD" SHALL NOT EXCEED 90°±0°0'15".
7.— THERE SHALL BE NO EVIDENCE OF CRACKS, CHIPS, GALLING, BRUISES OR OTHER IMPERFECTIONS WHICH MAY CAUSE LATENT DEFECTS OR INTERFERE WITH CERTIFICATION OF ACCURACY REQUIREMENTS.

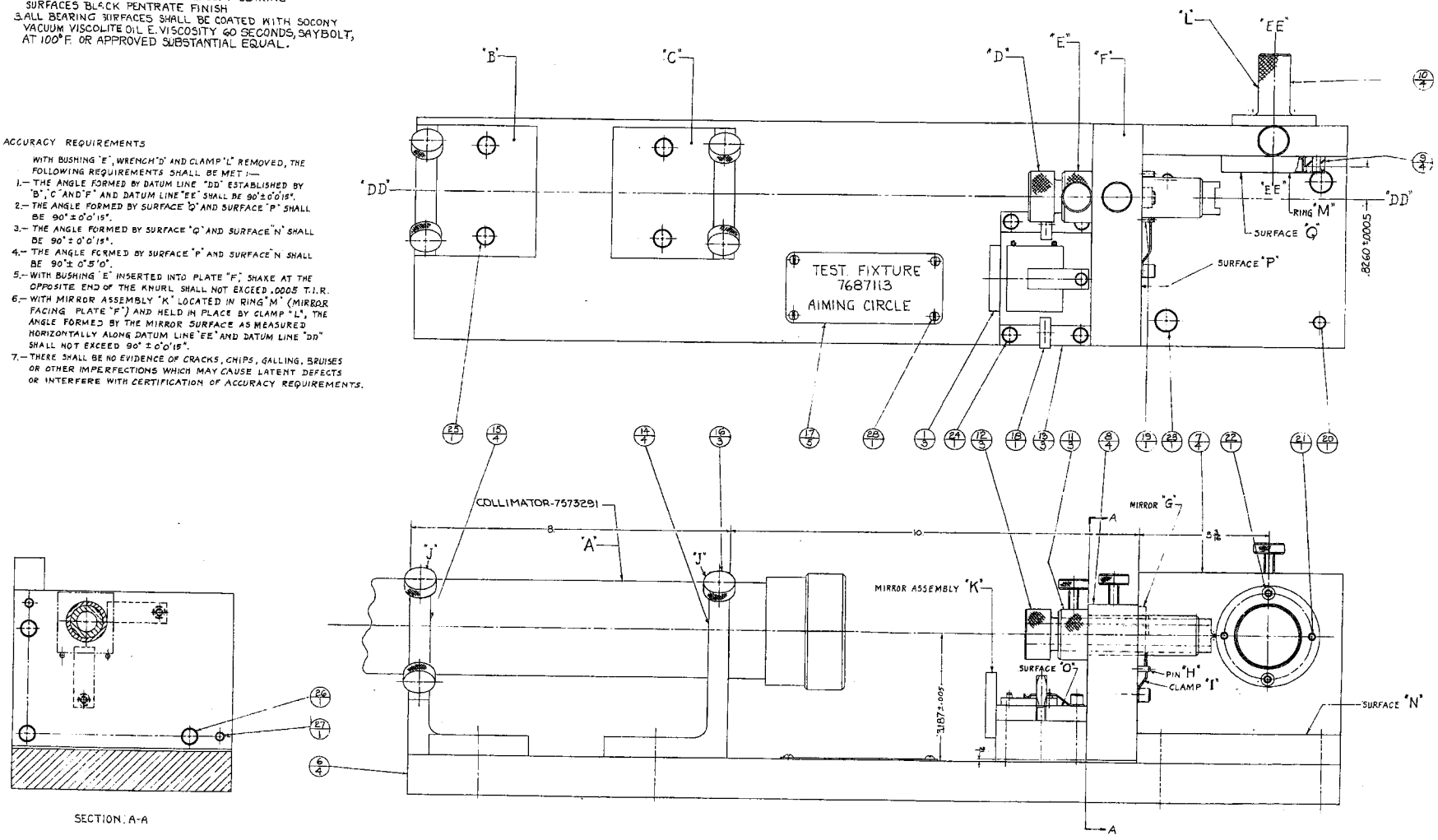

SECTION A-A

CODE IDENT NO.	19200
U S ARMY ARMAMENT RESEARCH AND DEVELOPMENT COMMAND	DOVER, NEW JERSEY 07801
ORIGINAL DATE OF DRAWING	10-19 56
TOLERANCES ON DECIMALS	ANGLES ±1° FRACTIONS ± 1/64
MATERIAL	
HEAT TREATMENT	
FINAL PROTECTIVE FINISH	
SCALE	1:1
UNIT WT	
TEST FIXTURE, AIMING CIRCLE	
SIZE	F
DRAWING NO.	7687113
SHEET	12

REVISIONS

LTR	DESCRIPTION	DATE	APPROVAL
B	NOR 60-00001 BULKHEAD RECESS		
A	USE EPAL PART 50240	25MAY60	[illegible]

FIRE CONTROL INSTRUMENT GROUP
ORDNANCE CORPS
DEPT OF THE ARMY
SPRINGFIELD ARSENAL

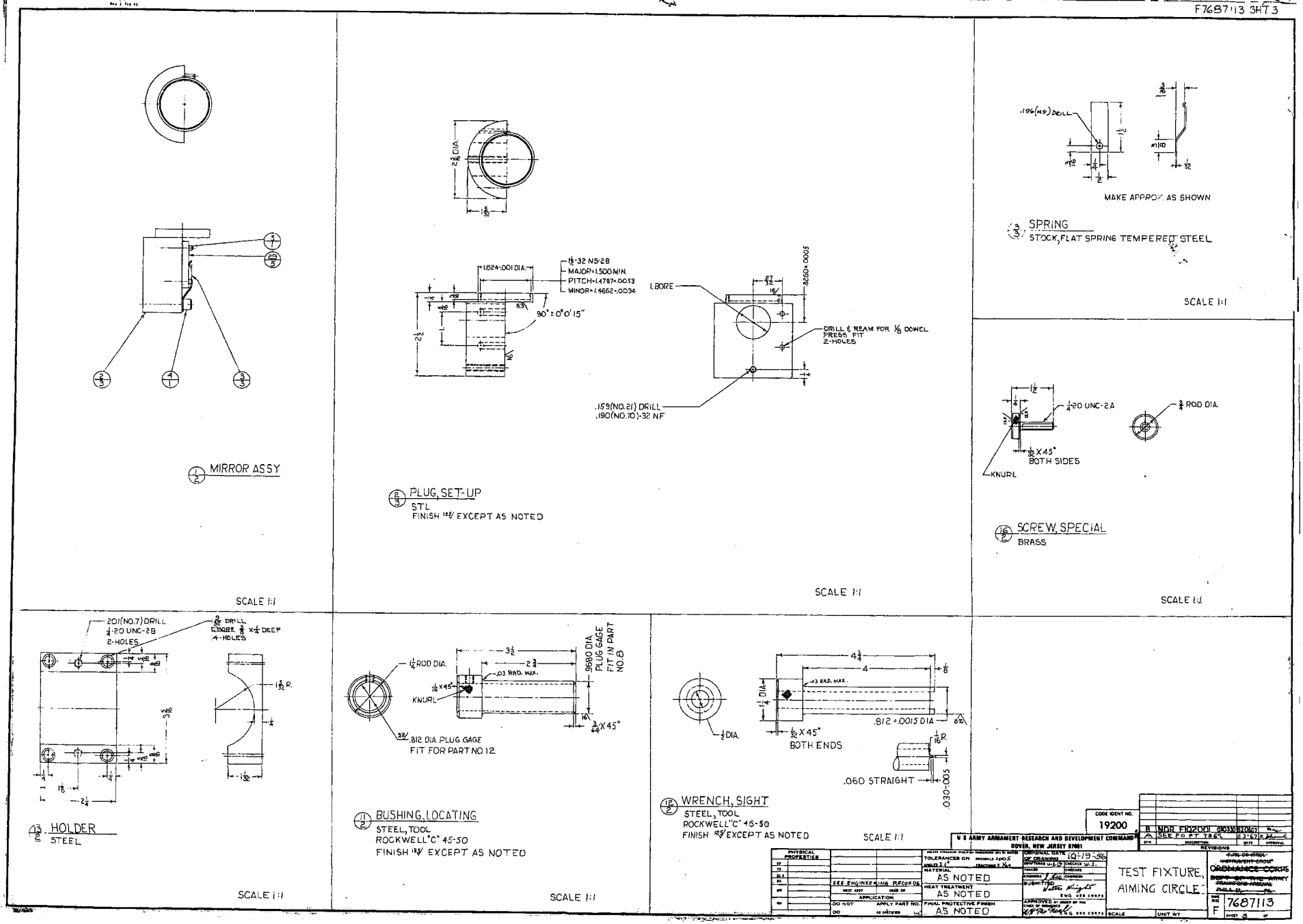

MIRROR ASSY
SCALE 1:1
PLUG, SET-UP
STL
FINISH 125/ EXCEPT AS NOTED
1.624-.001 DIA.
1½-32 NS-2B
MAJOR=1.500 MIN.
PITCH=1.4787+.0053
MINOR=1.4662+.0034
90°±0°0'15"
1. BORE
DRILL & REAM FOR ⅛ DOWEL PRESS FIT 2-HOLES
.159(NO.21) DRILL
.190(NO.10)-32 NF
SCALE 1:1
.196(NO.9) DRILL
MAKE APPROX. AS SHOWN
SPRING
STOCK, FLAT SPRING TEMPERED STEEL
SCALE 1:1
¼-20 UNC-2A
¾ ROD DIA.
1/32 X 45° BOTH SIDES
KNURL
SCREW, SPECIAL
BRASS
SCALE 1:1
.201(NO.7) DRILL
¼-20 UNC-2B
2-HOLES
9/32 DRILL
C.BORE ⅜ X ¼ DEEP
4-HOLES
HOLDER
STEEL
SCALE 1:1
1¼ ROD DIA.
.03 RAD. MAX.
KNURL
.9680 DIA PLUG GAGE FIT IN PART NO.8
.812 DIA. PLUG GAGE FIT FOR PART NO.12
BUSHING, LOCATING
STEEL, TOOL
ROCKWELL "C" 45-50
FINISH 125/ EXCEPT AS NOTED
SCALE 1:1
.812+.0015 DIA
1/32 X 45° BOTH ENDS
.060 STRAIGHT
WRENCH, SIGHT
STEEL, TOOL
ROCKWELL "C" 45-50
FINISH 125/ EXCEPT AS NOTED
SCALE 1:1
CODE IDENT NO. 19200
U S ARMY ARMAMENT RESEARCH AND DEVELOPMENT COMMAND
DOVER, NEW JERSEY 07801
REVISIONS
PHYSICAL PROPERTIES
SEE ENGINEERING RECORDS
MATERIAL AS NOTED
HEAT TREATMENT AS NOTED
FINAL PROTECTIVE FINISH AS NOTED
ORIGINAL DATE OF DRAWING 10-19-56
SUBMITTED
APPROVED
TEST FIXTURE, AIMING CIRCLE
ORDNANCE CORPS
DEPT OF THE ARMY
FRANKFORD ARSENAL
PHILA 37, PA.
F 7687113
SCALE
UNIT WT

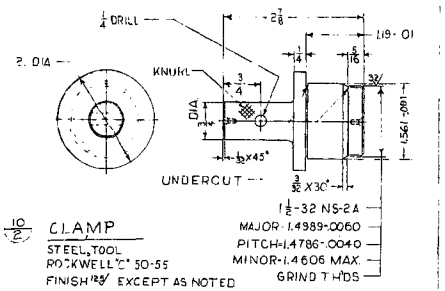

10/2 CLAMP
STEEL, TOOL
ROCKWELL "C" 50-55
FINISH 125 EXCEPT AS NOTED

SCALE 1:1

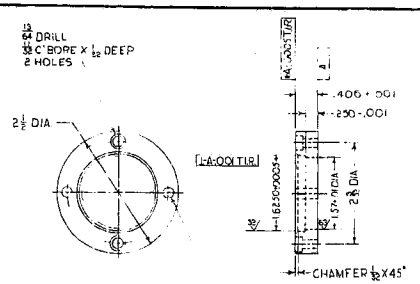

9/2 RING, LOCATING
STEEL, TOOL
ROCKWELL "C" 45-50
FINISH 125 EXCEPT AS NOTED

DRILL & REAM FOR 3/8 DOWEL
SLIP FIT
2 HOLES

SCALE 1:1

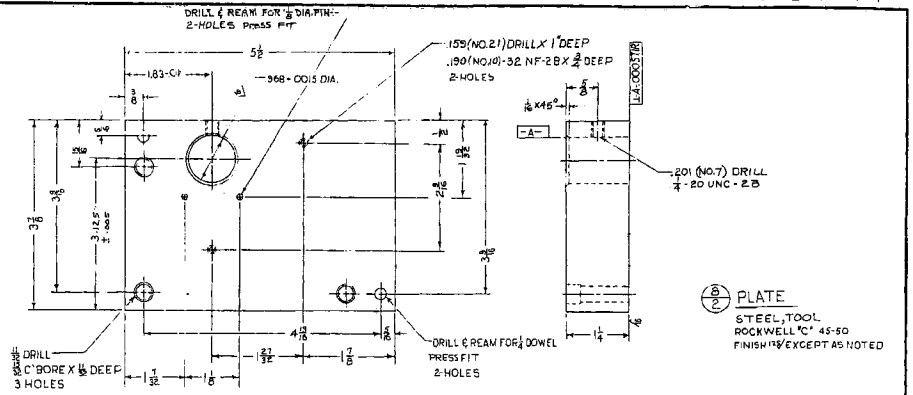

9/2 PLATE
STEEL, TOOL
ROCKWELL "C" 45-50
FINISH 125 EXCEPT AS NOTED

SCALE 1:1

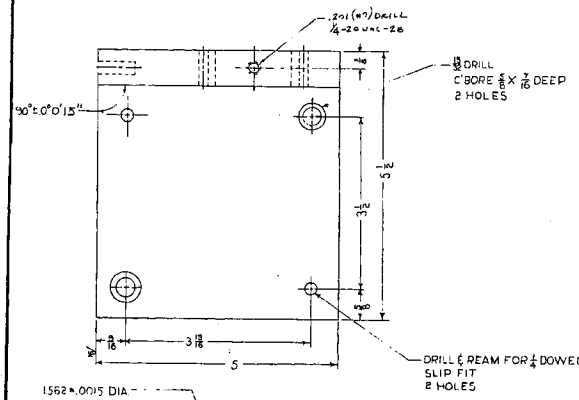

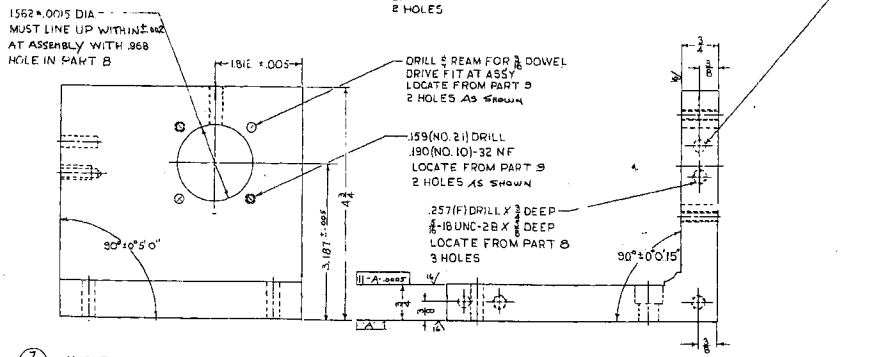

7/2 ANGLE
CAST IRON
FINISH 125 EXCEPT AS NOTED

SCALE 1:1

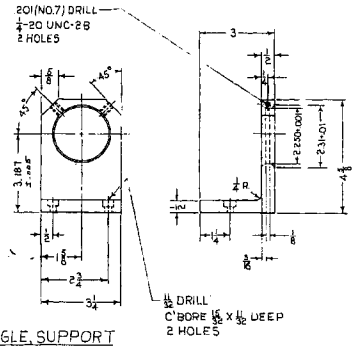

14/2 ANGLE, SUPPORT
CAST IRON
FINISH 125 ALL OVER

SCALE 1:2

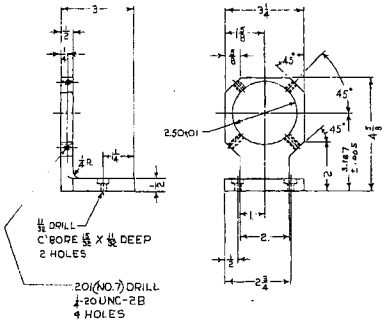

15/2 ANGLE, SUPPORT
CAST IRON
FINISH 125 ALL OVER

SCALE 1:2

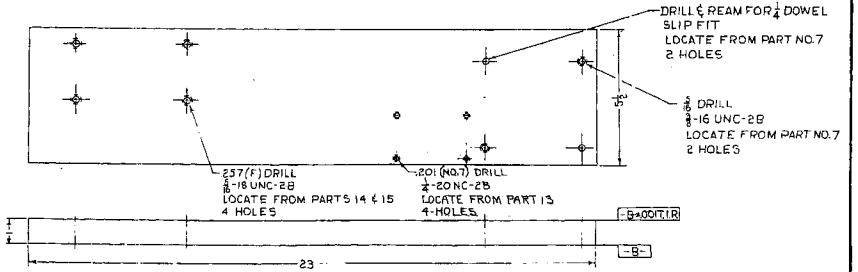

6/2 BASE
CAST IRON
FINISH 125 ALL OVER

SCALE 1:2

SCALE 1:1

CODE IDENT NO. 19200

U.S. ARMY ARMAMENT RESEARCH AND DEVELOPMENT COMMAND
DOVER, NEW JERSEY 07801

B NOR FR02001 R03C30607

REVISIONS

PHYSICAL PROPERTIES	TOLERANCES ON	ORIGINAL DATE OF DRAWING 10-19-56
SEE ENGINEERING RECORDS	MATERIAL AS NOTED	DRAWN R.E.L.
	HEAT TREATMENT AS NOTED	TRACED
	FINAL PROTECTIVE FINISH AS NOTED	CHECKED
		ENGINEER
		SUBMITTED Walter Knight
		APPROVED

TEST FIXTURE, AIMING CIRCLE

SCALE 1: NOTED UNIT WT.

FIRE CONTROL INSTRUMENT GROUP
ORDNANCE CORPS
DEPT OF THE ARMY
FRANKFORD ARSENAL
PHILA. 37, PA.

SIZE F 7687113 SHEET 4 OF

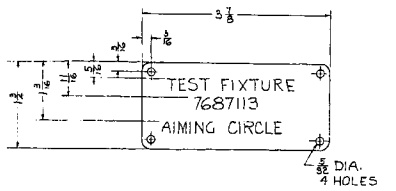

NOTE
1. ALL LETTERING GOTHIC CAPITALS NUMERALS TO BE SIMILAR IN APPEARANCE AND CENTRALLY LOCATED
2. STAMP OR ENGRAVE LETTERS AND NUMERALS 1/8 HIGH X.015 WIDE X.010 DEEP BEFORE BLACK ANODIZING.
3. APPLY GRADUATION WHITE TO LETTERS AND NUMERALS, AND APPLY LACQUER ALL OVER.

(17) (2) PLATE, IDENTIFICATION
ALUMINUM ALLOY AL-3
.025 THK. CONDITION 1/2 H

SCALE: 1-1

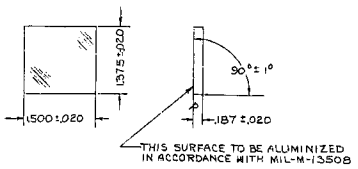

ELEMENT IN ACCORDANCE WITH SPEC. MIL-O-13830
ALL EDGES TO BE CHAMFERED .010 ±.010 (FACE WIDTH) AT 45°
SURFACE MARKED "P" POLISHED; OTHER SURFACES FINE GROUND, (USE 240 DIAMOND GRIT OR FINER)
SURFACE QUALITY 80-50
RESOLVING POWER TO BE AT LEAST 5 SECONDS OF ARC OR BETTER WHEN MEASURED WITH AN OBSERVING TELESCOPE WHICH HAS A 1.5 INCH DIAMETER ENTRANCE PUPIL
SPHERICAL POWER NOT TO EXCEED 2. MILLI DIOPTERS
ASTIGMATISM NOT TO EXCEED 2. MILLIDIOPTERS
CLEAR APERTURE 1.350 VERTICALLY; 1.480 HORIZONTALLY

OPTIONAL CONSTRUCTION:
THE ALUMINUM REFLECTING COATING MAY BE OVERLAID WITH A FILM OF SILICON MONOXIDE IN PLACE OF MAGNESIUM FLUORIDE

(29) (5) REFLECTOR
OPTICAL GLASS, TYPE 517-645
GRADE D, SPEC. JAN-G-174

SCALE 1:1

CODE IDENT NO. 19200
SIZE F
DWG NO. NOB PIQ2001 SKET
REVISIONS
ZONE | DESCRIPTION | DATE | APPROVAL
ARE FOR THE WATERVLIET ARSENAL ORDNANCE CORPS DEPT OF THE ARMY WATERVLIET, N.Y.

U.S. ARMY ARMAMENT RESEARCH AND DEVELOPMENT COMMAND
DOVER, NEW JERSEY 07801

PHYSICAL PROPERTIES
SEE ENGINEERING RECORDS
NEXT ASSY | USED ON
APPLICATION
DO NOT | APPLY PART NO.
DO | AS SPECIFIED

TOLERANCES ON FRACTIONS ±1/64 DECIMALS .005 ANGLES ±1° MACHINED 125
MATERIAL AS NOTED
HEAT TREATMENT
FINAL PROTECTIVE FINISH

ORIGINAL DATE OF DRAWING 10-19-56
DRAWN H.K. | CHECKED W.L.
TRACED | STRESSED
SUBMITTED Walter Knight ORDNANCE CORPS
APPROVED BY ORDER OF THE CHIEF OF ORDNANCE H.W. Mehl ORDNANCE CORPS

TEST FIXTURE, AIMING CIRCLE

SCALE | UNIT WT.

SIZE F | 7687113 | SHEET 5 OF

F7694427

LTR	DESCRIPTION	DATE	APPROVAL
A	SEE EO FT 3600	7-29-43	[illegible]
B	SEE EO FT 5445	5-13-46	[illegible]
C	SEE EO FT 7484	6-5-67	[illegible]
D	SEE EO FT 7515	8-18-67	[illegible]
E	NOR D7Q2003/870415	890619	[illegible]

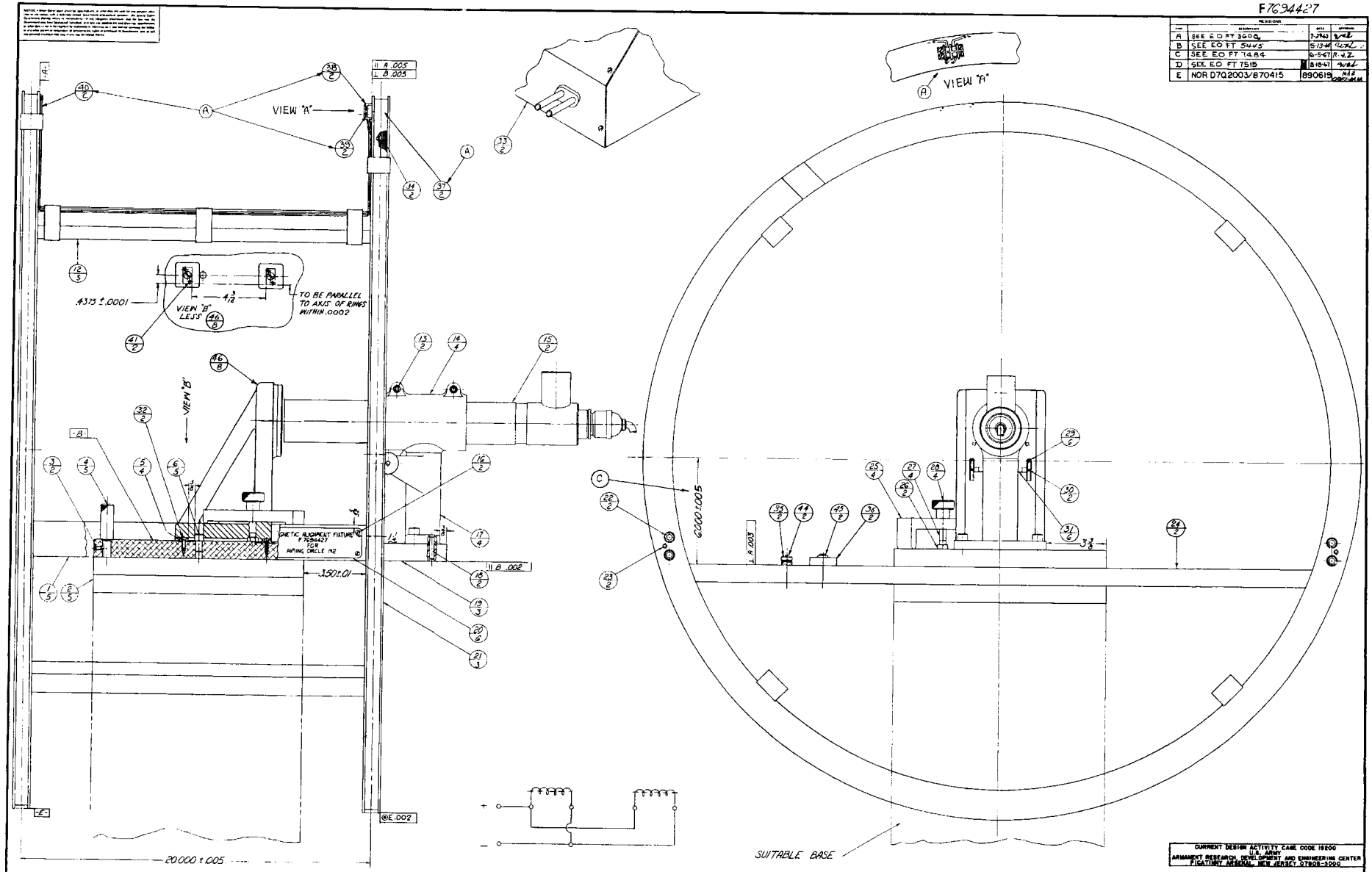

CURRENT DESIGN ACTIVITY CASE CODE 19200
U.S. ARMY
ARMAMENT RESEARCH, DEVELOPMENT AND ENGINEERING CENTER
PICATINNY ARSENAL, NEW JERSEY 07806-3000

PART NO. 7694427
CODE IDENT NO. 19200

REVISION	E	E	E	E	E	E	E	E
SHEET	1	2	3	4	5	6	7	8
REV STATUS OF SHEETS BLOCK								

SEE ENGINEERING RECORDS

APPLICATION

DO NOT SCALE — APPLY PART NO. AS SPECIFIED

PHYSICAL PROPERTIES: YP, TS, ELI, KA, BH, RH

UNLESS OTHERWISE SPECIFIED DIMENSIONS ARE IN INCHES TOLERANCES ON FRACTIONS DECIMALS ANGLES

MATERIAL

HEAT TREATMENT

FINAL PROTECTIVE FINISH

ORIGINAL DATE OF DRAWING 13 FEB 1961

MAGNETIC ALIGNMENT FIXTURE FOR AIMING CIRCLE M2

SCALE 1/2 — UNIT WT

INDUSTRIAL GROUP
ORDNANCE CORPS
DEPT OF THE ARMY
FRANKFORD ARSENAL

SIZE F — 7694427 — SHEET 1 OF 8

FC-1E

LIST OF MATERIAL

ITEM NO.	PART NO.	DWG. NO.	QUAN.	DESCRIPTION	SPEC. NO.	MATERIAL	SPEC.
	7654427	F7654427		MAGNETIC ALIGNMENT FIXTURE FOR AMMO. CIRCLE MK			
1			2	POST	5	ALUMINUM CONT.	
2			1	INSERT	5	ALUMINUM CONT.	
3			1	SCREW, SET NO.10-32NC-2 × 5/8 LG DOG POINT		ALUMINUM CONT.	
4			1	PAN	5	ALUMINUM CONT.	
5			2	LOCATOR	4	ALUMINUM CONT.	
6			1	PAN, LOCATING	5	ALUMINUM CONT.	
9			1	PAD TO SUIT		SOFT RUBBER	
10			3	SCREW, SOC HD CAP NO.10-32NC-2 × 1/4 LG		ALUMINUM CONT.	
				3-6 TO 11			
12			4	BAR	3	ALUMINUM CONT.	
13			2	SCREW, SOC HD CAP 1/4-20NC-2 × 5/8 LG		ALUMINUM CONT.	
				2-11 14			
14			1	HOLDER	4	ALUMINUM CONT.	
15	7652770	F7652770	1	COLLIMATOR, PROJECTOR			
16	7654427	F7654427	4	SCREW, PD HD NO.6-32NC-2 × 3/16 LG		ALUMINUM CONT.	
17			1	SLEEVE	4	ALUMINUM CONT.	
18			2	PIN, DOWEL 1/4 DIA × 1 1/2 LG		ALUMINUM CONT.	
				2-17 TO 13			
19			1	PLATE	3	ALUMINUM CONT.	
20			1	PLATE, IDENTIFICATION	6	ALUMINUM CONT.	
21			2	RING	3	ALUMINUM CONT.	
22			20	SCREW, SOC HD CAP 5/16-18NC-2 × 1 1/2 LG		ALUMINUM CONT.	
				8-21 TO 1			
				8-12 TO 21			
				4-11 2			
				4-24 TO 1			
				3-19 TO 2			
				2-17 TO 19			
23			24	PIN, DOWEL 1/4 DIA × 2 LG		ALUMINUM CONT.	
				16-12 TO 21			
				4-21 TO 1			
				4-24 TO 1			
24			1	SUPPORT	5	ALUMINUM CONT.	
25			1	CLAMP	4	ALUMINUM CONT.	
26			1	NUT, HEX 5/16-18NC-2		ALUMINUM CONT.	
27			1	STUD	4	ALUMINUM CONT.	
28			1	KNOB	4	ALUMINUM CONT.	
29			2	KNOB	6	ALUMINUM CONT.	
30			2	PIN, DOWEL 1/8 DIA × 1 LG		ALUMINUM CONT.	
				2-29 THRU 31			
31			2	STUD	6	ALUMINUM CONT.	
32			2	SCREW, FLAT HD 100 10-24NC-2 × 5/16 LG		ALUMINUM CONT.	
				2-5 TO 19			
33	6213559	F6213559	1	POWER PACK FOR MAGNETIC ALIGNMENT FIXTURE			
34	7654427	F7654427	2	WIRE, MAGNETIC ENAMEL #29 200 TURNS			
35	7659026	C7659026	1	APERATURE			
36	7659029	C7659029	1	APERATURE			
37			@	TAPE, INSULATING ELECTRICAL COMMERCIAL	1		
38	10531663-2	310531663	1	TERMINAL BOARD	1		
39			4	SCREW, MACH., PAN HEAD	1	ALUM. ALLOY	
				NO.6-32NC-2B X 5/8 LONG			
				4-THRU 38 INTO 21			
40			@	TUBING, THIN WALL, BIREFLON T-500 TEFLON,	A		
				SLEEVE, AWG SIZE 26 .038 OD .018 I.D.			
				.010 WALL THICKNESS LENGTH TO SUIT			
				(ALL EXPOSED WIRE)			
41			4	PIN, DOWEL 1/8 DIA X 3/4 LONG	1	ALUMINUM CONT.	
44			1	SCREW, PAN HD, MACH #4-40UNC-2AX 1 LG	1	ALUMINUM CONT.	
45			1	SCREW, PAN HD, MACH #10-24UNC-2AX 1 LG	1	ALUMINUM CONT.	
46			1	ADAPTER, AUTO-COLLIMATOR	1		
47			1	SPRING	8		
48			1	REFLECTOR	8	PYREX GLASS	
49			5	SCREW, FLAT HD, MACH. .138 (NO6) 32UNC-2A X 3/4 LG.	8	STEEL	
50			1	ADAPTER	8	IRON CASTING GRA	
51			1	PLATE	8	STL. TOOL, ALLOY	QQ-T-570, CLASS 4

@ = AS REQUIRED

(A) → /\ SUGGESTED SOURCE
BIRNBACH RADIO COMPANY INC.
145 HUDSON ST. NEW YORK 13, N.Y.

F7694421

REVISIONS			
TYP	DESCRIPTION	DATE	APPROVAL
A	SEE EO FT 3608	7-29-63	
B	SEE EO FT 5445	5-13-65	
C	SEE EO FT 7515	8-18-67	
E	NOR D7Q2003/870415	890619	MAZ OAFI-MM

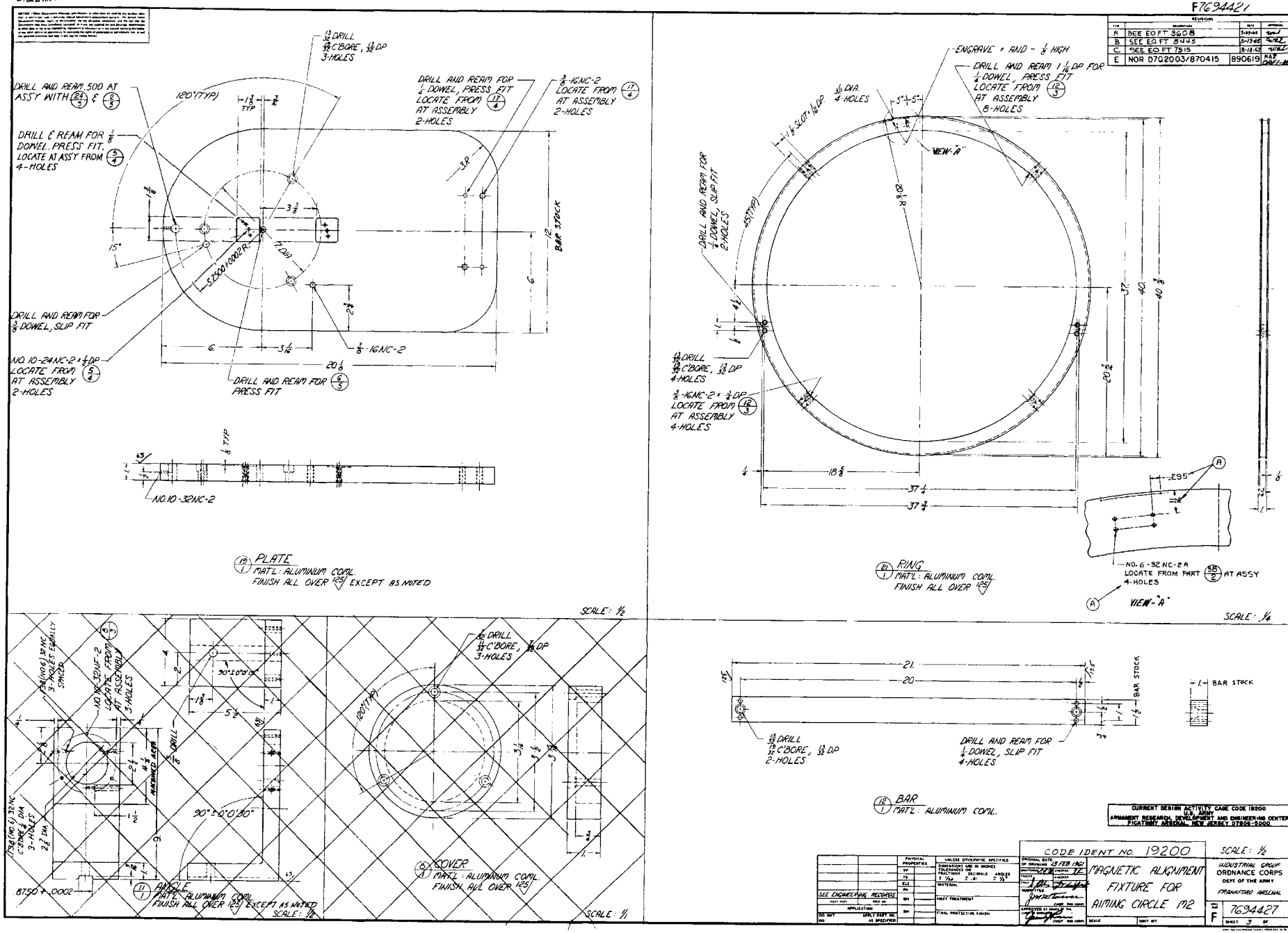

CURRENT DESIGN ACTIVITY CAGE CODE 19200
U.S. ARMY
ARMAMENT RESEARCH, DEVELOPMENT AND ENGINEERING CENTER
PICATINNY ARSENAL, NEW JERSEY 07806-5000

CODE IDENT NO. 19200

SCALE: 1/2

MAGNETIC ALIGNMENT FIXTURE FOR AIMING CIRCLE M2

INDUSTRIAL GROUP
ORDNANCE CORPS
DEPT OF THE ARMY
FRANKFORD ARSENAL

F 7694427

SHEET 3 OF

F7694427

REVISIONS			
LTR	DESCRIPTION	DATE	APPROVAL
A	SEE EO FT 5611	5-5-63	[illegible]
B	SEE EO FT 5445	5-13-65	[illegible]
E	NOR D7Q2003/870415	890619	[illegible]

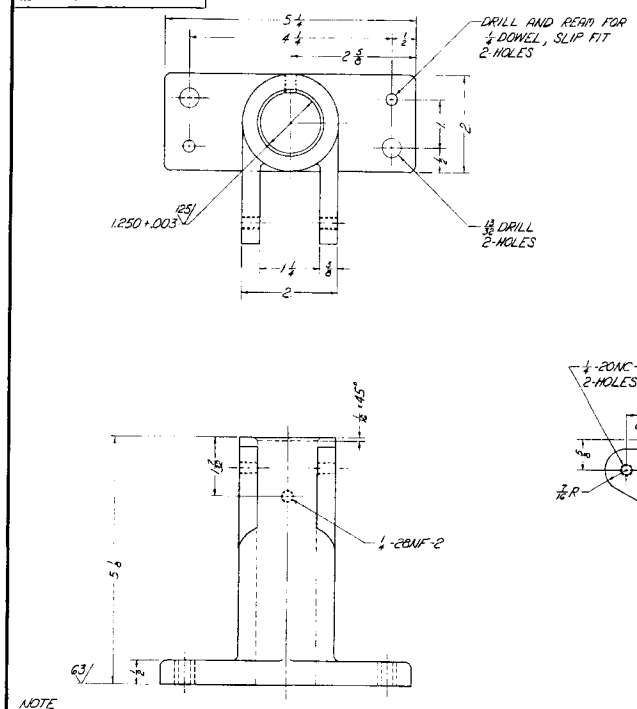

NOTE
ALL RADII 1/8 UNLESS OTHERWISE SPECIFIED

(17) (1) SLEEVE
MAT'L: ALUMINUM COML.
250 ALL OVER EXCEPT AS NOTED

SCALE: 1/1

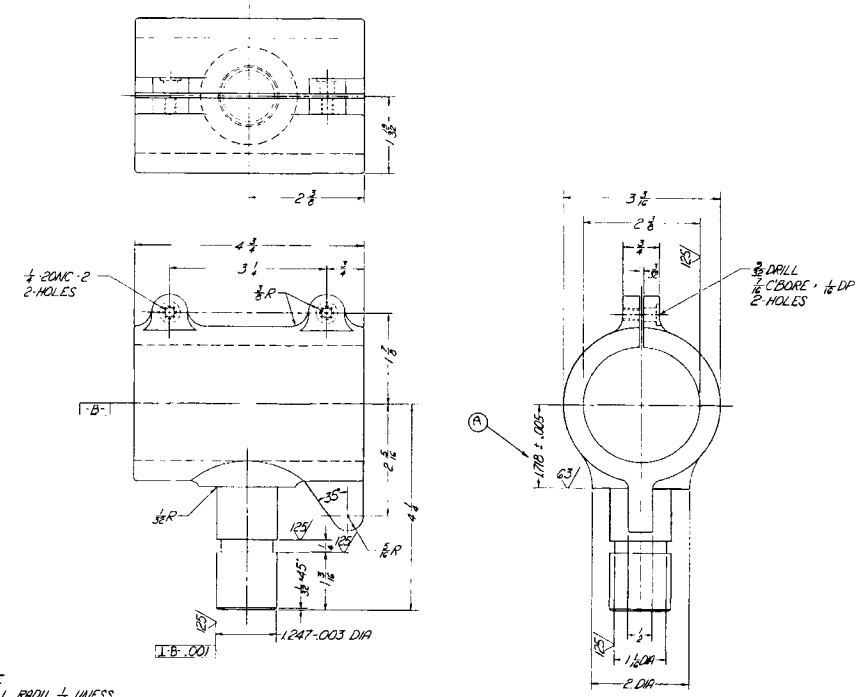

NOTE
ALL RADII 1/16 UNESS OTHERWISE SPECIFIED

(14) (1) HOLDER
MAT'L: ALUMINUM COML.
250 ALL OVER EXCEPT AS NOTED

SCALE: 1/1

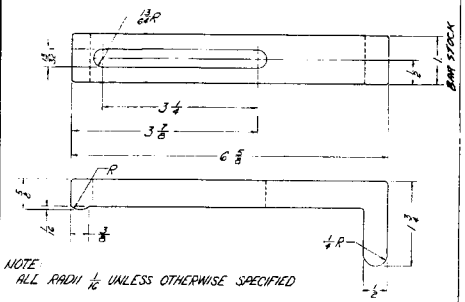

NOTE:
ALL RADII 1/16 UNLESS OTHERWISE SPECIFIED

(25) (1) CLAMP
MAT'L: ALUMINUM COML.
FINISH ALL OVER 125 EXCEPT AS NOTED

SCALE: 1/1

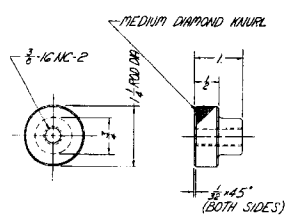

NOTE:
ALL RADII 1/16 UNLESS OTHERWISE SPECIFIED

(28) (1) KNOB
MAT'L: ALUMINUM COML.
125 ALL OVER EXCEPT AS NOTED

SCALE: 1/1

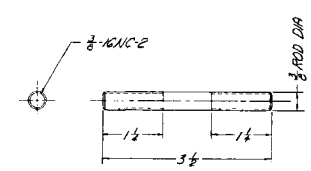

(27) (1) STUD
MAT'L: ALUMINUM COML.

SCALE: 1/1

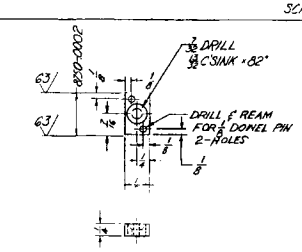

(5) (1) LOCATOR
MAT'L: ALUMINUM COML.
125 ALL OVER EXCEPT AS NOTED

SCALE: 1/1

CURRENT DESIGN ACTIVITY CASE CODE 19200
ARMAMENT RESEARCH, DEVELOPMENT AND ENGINEERING CENTER
PICATINNY ARSENAL, NEW JERSEY 07806-5000

CODE IDENT. NO. 19200

PHYSICAL PROPERTIES	UNLESS OTHERWISE SPECIFIED DIMENSIONS ARE IN INCHES TOLERANCES ON FRACTIONS ± 1/64 DECIMALS ±.01 ANGLES ± 1/2°	ORIGINAL DATE OF DRAWING 13 FEB 1961	MAGNETIC ALIGNMENT FIXTURE FOR AIMING CIRCLE M2
SEE ENGINEERING RECORDS	MATERIAL		
APPLICATION	HEAT TREATMENT		
DO NOT APPLY PART NO. AS SPECIFIED	FINAL PROTECTIVE FINISH		

INDUSTRIAL GROUP
ORDNANCE CORPS
DEPT OF THE ARMY
FRANKFORD ARSENAL

SIZE F 7694427
SHEET 4 OF

F7694427

LTR	DESCRIPTION	DATE	APPROVAL
A	SEE E.O. FT 5445	5-13-65	[illegible]
B	SEE E.O. FT 7515	8-18-67	[illegible]
E	NOR 07Q2003/870415	890619	[illegible]

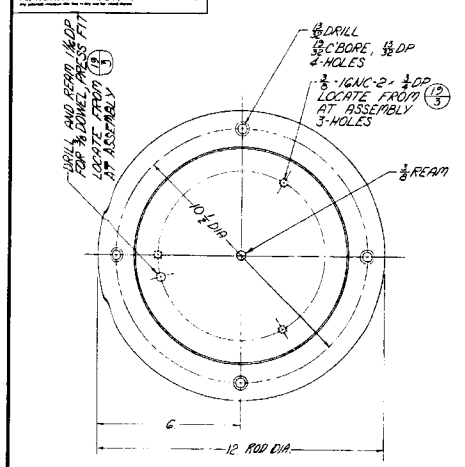

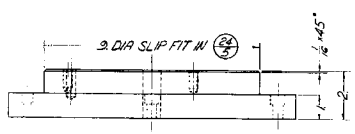

(2/1) INSERT
MAT'L: ALUMINUM COML
FINISH ALL OVER 125 EXCEPT AS NOTED

SCALE: 1/2

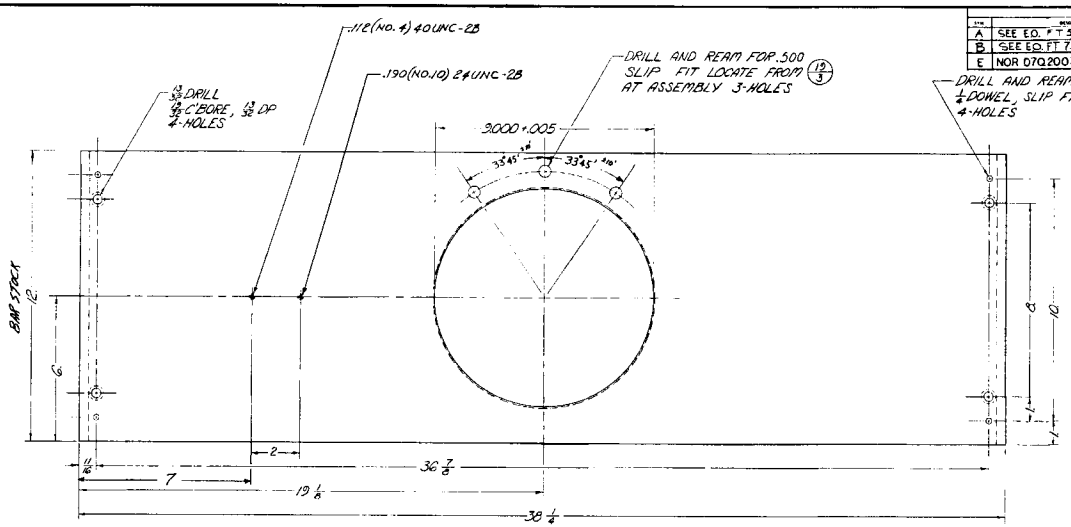

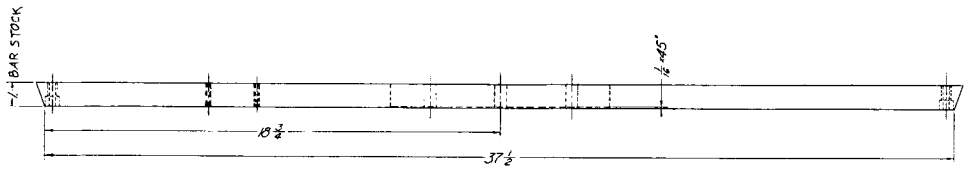

(24/1) SUPPORT
MAT'L: ALUMINUM COML.
FINISH ALL OVER 125 EXCEPT AS NOTED

SCALE: 1/2

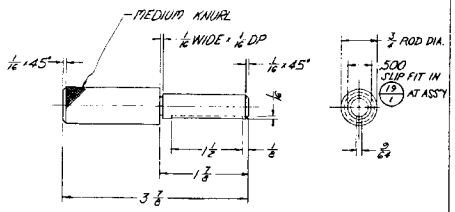

(4/1) PIN
MAT'L: ALUMINUM COML.
FINISH ALL OVER 125

SCALE: 1/1

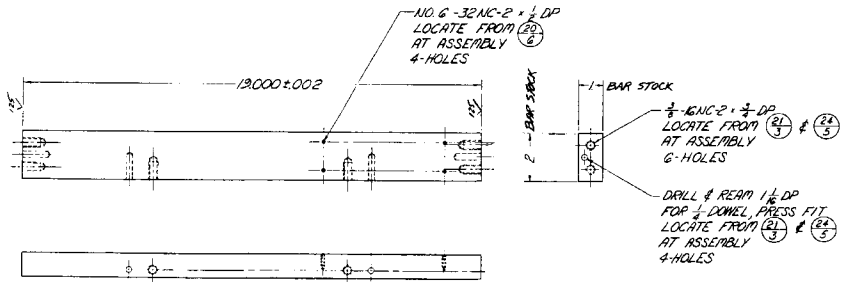

(1/1) POST
MAT'L: ALUMINUM COML.

SCALE: 1/2

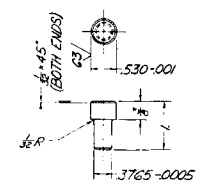

(6/1) PIN, LOCATING
MAT'L: ALUMINUM COML.
125 ALL OVER EXCEPT AS NOTED

SCALE: 1/1

CURRENT DESIGN ACTIVITY CAGE CODE 19200
U.S. ARMY
ARMAMENT RESEARCH, DEVELOPMENT AND ENGINEERING CENTER
PICATINNY ARSENAL, NEW JERSEY 07806-5000

CODE IDENT. NO. 19200

PHYSICAL PROPERTIES	
VP	
TS	
EIZ	
RA	
BH	
RH	
SEE ENGINEERING RECORDS	
NEXT ASSY	USED ON
APPLICATION	
DO NOT DO	APPLY PART NO. AS SPECIFIED

UNLESS OTHERWISE SPECIFIED
DIMENSIONS ARE IN INCHES
TOLERANCES ON
FRACTIONS ± 1/64 DECIMALS ± .01 ANGLES ± 1/2°
MATERIAL
HEAT TREATMENT
FINAL PROTECTIVE FINISH

ORIGINAL DATE OF DRAWING 13 FEB 1961
DRAFTING [illegible]
TRACED [illegible]
CHECKED [illegible]
SUBMITTED [illegible]
APPROVED AS SHOWN BY THE CHIEF OF ENGINEERING
[illegible]

MAGNETIC ALIGNMENT FIXTURE FOR AIMING CIRCLE M2

SCALE | UNIT WT

INDUSTRIAL GROUP
ORDNANCE CORPS
DEPT OF THE ARMY
FRANKFORD ARSENAL

SIZE F | 7694427
SHEET 5 OF

FC-1E

F7694427

REVISIONS			
LTR	DESCRIPTION	DATE	APPROVED
A	SEE E.O. FT 5445	5-13-65	[illegible]
B	SEE E.O. FT 7515	5-8-67	[illegible]
E	NOR D702003/870415	890619	[illegible]

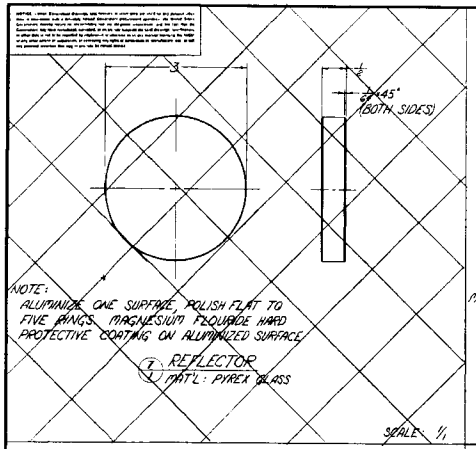

NOTE:
ALUMINIZE ONE SURFACE, POLISH FLAT TO FIVE RMS. MAGNESIUM FLOURIDE HARD PROTECTIVE COATING ON ALUMINIZED SURFACE.

(7) REFLECTOR
(1) MAT'L: PYREX GLASS

SCALE: 1/1

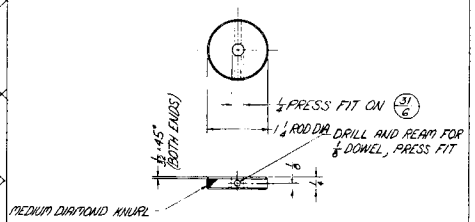

(23) KNOB
(1) MAT'L: ALUMINUM CODAL.
125 ALL OVER EXCEPT AS NOTED

SCALE: 1/1

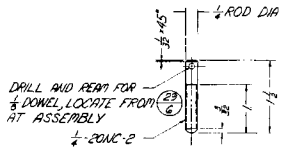

(31) STUD
(1) MAT'L: ALUMINUM CODAL.
125 ALL OVER EXCEPT AS NOTED

SCALE: 1/1

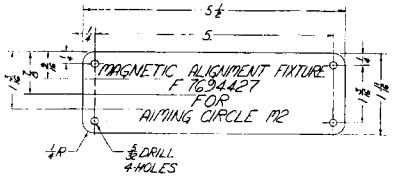

NOTE:
1- ENGRAVE ALL LETTERS AND NUMERALS 1/4" HIGH x .010 WIDE x .010 DEEP.
2- BLACK ANODIZE ALL OVER. FILL LETTERS AND NUMERALS WITH GRADUATION WHITE.

(20) PLATE, IDENTIFICATION
(1) MAT'L: ALUMINUM CODAL 1/16 THICK

SCALE: 1/1

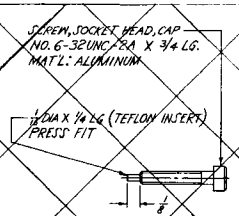

(42) SCREW, SPECIAL
(1)

SCALE 2/1

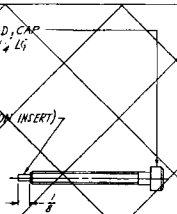

(43) SCREW, SPECIAL
(1)

SCREW 2/1

CURRENT DESIGN ACTIVITY CAGE CODE 19200
U.S. ARMY
ARMAMENT RESEARCH, DEVELOPMENT AND ENGINEERING CENTER
PICATINNY ARSENAL, NEW JERSEY 07806-5000

CODE IDENT NO. 19200

S.E. ENGINEERING RECORDS	PHYSICAL PROPERTIES: TP, TS, E.L.2, MATERIAL, HEAT TREATMENT, FINISH, FINAL PROTECTIVE FINISH	UNLESS OTHERWISE SPECIFIED DIMENSIONS ARE IN INCHES TOLERANCES ON FRACTIONS ± 1/64, DECIMALS .X ± .01, .XX ± .005, ANGLES ± 1/2°	ORIGINAL DATE OF DRAWING 13 FEB 1967
DO NOT APPLY PART NO. AS SPECIFIED			

MAGNETIC ALIGNMENT FIXTURE FOR AIMING CIRCLE M2

INDUSTRIAL GROUP
ORDNANCE CORPS
DEPT OF THE ARMY
FARMINGDALE ARSENAL

SIZE F | 7694427 | SHEET 6 OF

FC 1E

F 7694427

REVISIONS			
LTR	DESCRIPTION	DATE	APPROVED
A	SEE ED FT 3612	11-8-79	[illegible]
B	SEE ED FT [illegible]	[illegible]	[illegible]
C	SEE E.O. FT 7515	[illegible]	[illegible]
E	NOR 07Q2003/870415 1890619		

CALIBRATION PROCEDURE:

CALIBRATION SHOULD BE PERFORMED USING THE IDENTICAL SET-UP INSTRUCTIONS FOR A PRODUCTION AIMING CIRCLE M2 REPLACING IT WITH A CERTIFIED STANDARD AIMING CIRCLE M2A2. WITH THE POWER ON THE FIXTURE SHOULD BE ALIGNED TO ALLOW THE NEEDLE INDEX TO CENTER ITSELF EXACTLY ON THE LONG RETICLE LINE OF THE STANDARD.

THIS PROCEDURE SHOULD BE PERFORMED AT THE START OF EACH DAY OF USE AND EVERY FOUR (4) HOURS THEREAFTER DURING PERIODS OF INSPECTING.

* CAUTION: DURING CALIBRATION, ALL MAGNETIC MATERIALS SHOULD BE KEPT CLEAR OF THE FIXTURE BY AT LEAST 8 FEET TO ASSURE NO MAGNETIC INTERFERENCE.

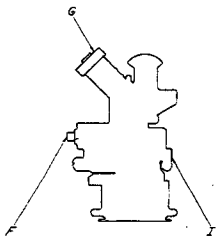

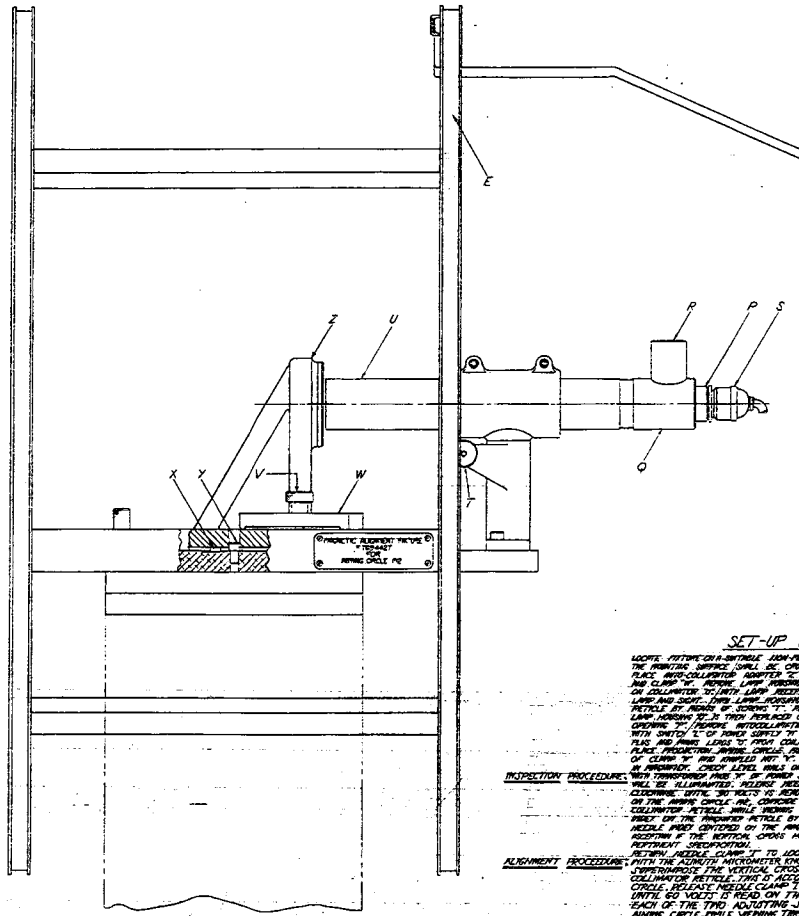

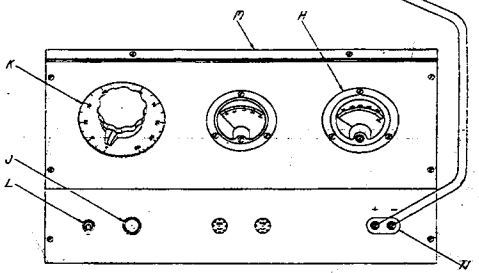

*LOCATE POWER SUPPLY AS FAR FROM COILS AS LEADS WILL PERMIT

SET-UP AND OPERATING INSTRUCTIONS

LOCATE FIXTURE ON A SUITABLE NON-MAGNETIC BASE WITH THE AXIS OF THE COILS IN A NORTH-SOUTH DIRECTION. THE MOUNTING SURFACE SHALL BE CROSS LEVELED WITHIN 10 SECONDS.
PLACE BORE-COLLIMATOR ADAPTER "E" ON BENCH "I" LOCATE IN POSITION BY MEANS OF KNURLED NUT "V". RUN CLAMP "W" DOWN. LAMP RECEPTACLE "Q" HAS HELP CURVE FROM "COLLIMATOR" "T" REFERENCE LAMP MARKING "O" ON COLLIMATOR "T" WITH LAMP RECEPTACLE "Q" POINTING IN LAMP RECEPTACLE OPENING "R". ILLUMINATE COLLIMATOR LAMP AND SIGHT THRU LAMP RECEPTACLE OPENING "R". ACCOMPLISH THE VERTICAL CROSS HAIR OF THE COLLIMATOR RETICLE BY MEANS OF SCREW "T". REMOVE LAMP MARKING "O" AND REPLACE HELP CURVE ON COLLIMATOR. THE LAMP MARKING "O" IS THEN REPLACED ON THE COLLIMATOR "T" WITH LAMP RECEPTACLE "Q" IN THE LAMP MARKING "O" OPENING "R". REMOVE AUTOCOLLIMATING MIRROR "Z". (CARE SHOULD BE EXERCISED TO STOP COLLIMATOR WILL NOT BE DAMAGED) WITH SWITCH "L" OF POWER SUPPLY "N" IN OFF POSITION, PLUG IN POWER SUPPLY "N" TO A.C. RECEPTICAL. ATTACH PLUG AND LEADS LEADS TO FOUR COILS "O" IN CORRECTIVE MODE "H" OF POWER SUPPLY "N". PLACE PRODUCTION AIMING CIRCLE M2 WITH ALL KNOBS AT ZERO UNLESS "K" AND SECURE BY MEANS OF CLAMP "W" AND KNURLED NUT "V". PLACE APERTURE "G" UNDER EYEPIECE OF TELESCOPE AND APERTURE "F" IN ARMATURE. CHECK LEVEL VIALS ON AIMING CIRCLE M2, AND LEVEL IF NECESSARY. RESET KNOBS TO ZERO.

INSPECTION PROCEDURE: WITH TRANSFORMER KNOB "K" OF POWER SUPPLY "N" IN ZERO POSITION, TURN SWITCH "L" TO ON POSITION. LAMP "J" WILL BE ILLUMINATED. RELEASE NEEDLE CLAMP "I" OF AIMING CIRCLE M2. ROTATE TRANSFORMER KNOB "K" CLOCKWISE UNTIL 30 VOLTS IS READ ON THE D.C. METER "H". BY USE OF THE ELEVATION AND OPERATING KNOBS ON THE AIMING CIRCLE M2, CENTER THE CROSS HAIRS OF THE TELESCOPE WITH THE CROSS HAIRS OF THE COLLIMATOR RETICLE WHILE VIEWING THRU APERTURE "F" AND CENTER THE NEEDLE POINT ON THE ENGRAVED RETICLE BY MEANS OF THE OPERATING KNOBS OF THE AIMING CIRCLE M2 WITH THE NEEDLE POINT CENTERED ON THE ENGRAVED RETICLE, SIGHT THRU APERTURE "G" ON THE TELESCOPE AND RECEIVE IF THE VERTICAL CROSS HAIR OF THE TELESCOPE IS WITHIN THE TOLERANCE AS ESTABLISHED IN THE REFERENT SPECIFICATION.
RETURN NEEDLE CLAMP "I" TO LOCKED POSITION.

ALIGNMENT PROCEDURE: WITH THE AZIMUTH MICROMETER KNOB OF AIMING CIRCLE SET AT ZERO, VIEW THRU APPERATURE "G" AND SUPERIMPOSE THE VERTICAL CROSS HAIR OF THE TELESCOPE WITH THE VERTICAL CROSS HAIR OF THE COLLIMATOR RETICLE. THIS IS ACCOMPLISHED BY MEANS OF THE LOWER ORIENTING KNOBS OF THE AIMING CIRCLE. RELEASE NEEDLE CLAMP "I" OF AIMING CIRCLE. ROTATE TRANSFORMER KNOB "K" CLOCKWISE UNTIL 60 VOLTS IS READ ON THE D.C. METER "H". INSERT NON MAGNETIC SCREW DRIVERS INTO EACH OF THE TWO ADJUSTING SCREW HOLES IN THE SIDE OF THE NEEDLE HOUSING OF THE AIMING CIRCLE. WHILE VIEWING THRU APPERATURE "F" ADJUST THE MAGNETIC RETICLE HOLDER OF THE AIMING CIRCLE UNTIL THE NEEDLE OR LONG ARTICLE LINE IS CENTERED ON THE NEEDLE INDEX.
WITH THE AID OF A MAGNETIC METAL OBJECT DISPLACE THE MAGNETIC NEEDLE AND CHECK IF THE NEEDLE WILL REPEAT ITS ORIGINAL POSITION. IF IT IT DOES NOT REPEAT, CONTINUE PATH ADJUSTMENT TO RETICLE HOLDER UNTIL REPEATABILITY IS ACCOMPLISHED.
RETURN NEEDLE CLAMP "I" TO LOCKED POSITION.

CODE IDENT NO. 19200

SEE ENGINEERING RECORDS							

MAGNETIC ALIGNMENT FIXTURE FOR AIMING CIRCLE M2

INDUSTRIAL SERVICE ORDNANCE CORPS DEPT. OF THE ARMY FRANKFORD ARSENAL

SIZE F | 7694427 | SHEET 1 OF 1

COPYRIGHT 1979 BY ORDNANCE CORPS DEPARTMENT OF THE ARMY
THIS DRAWING IS THE PROPERTY OF THE U.S. GOVERNMENT AND IS LOANED TO THE BORROWER FOR INFORMATION ONLY. IT IS NOT TO BE REPRODUCED, COPIED, LOANED OR DISCLOSED WITHOUT WRITTEN PERMISSION OF THE ORDNANCE CORPS.

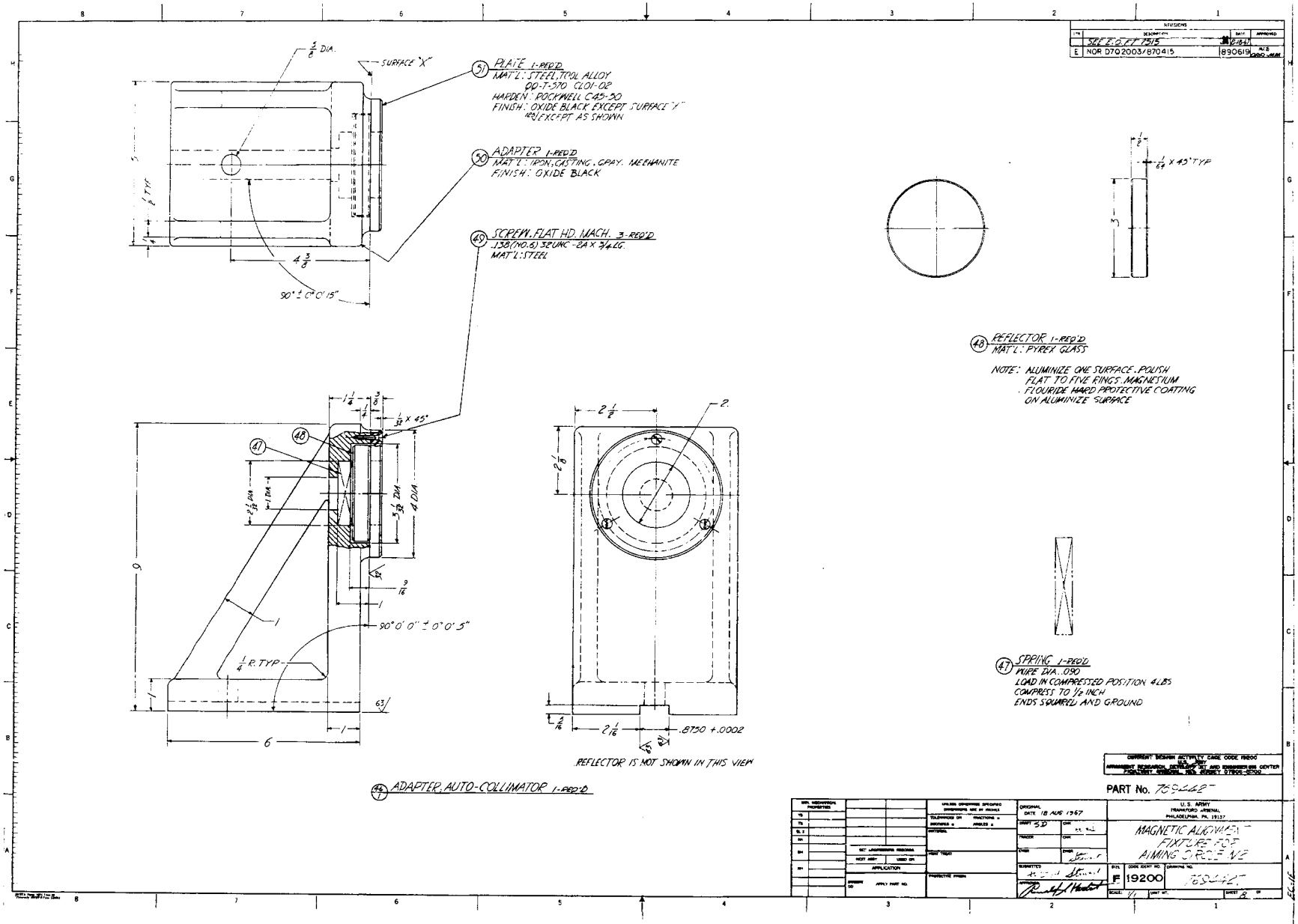

REVISIONS
SEE E.O. FT 7515
E NOR D7Q2003/870415 890619
51 PLATE 1-REQ'D
MAT'L: STEEL, TOOL ALLOY
QQ-T-570 CL01-02
HARDEN: ROCKWELL C45-50
FINISH: OXIDE BLACK EXCEPT SURFACE "X"
RQ EXCEPT AS SHOWN
50 ADAPTER 1-REQ'D
MAT'L: IRON, CASTING, GRAY, MEEHANITE
FINISH: OXIDE BLACK
49 SCREW, FLAT HD. MACH. 3-REQ'D
.138 (NO.6) 32UNC-2A X 3/4 LG.
MAT'L: STEEL
48 REFLECTOR 1-REQ'D
MAT'L: PYREX GLASS
NOTE: ALUMINIZE ONE SURFACE. POLISH FLAT TO FIVE RINGS. MAGNESIUM FLOURIDE HARD PROTECTIVE COATING ON ALUMINIZE SURFACE
47 SPRING 1-REQ'D
WIRE DIA. .090
LOAD IN COMPRESSED POSITION 4 LBS
COMPRESS TO 1/2 INCH
ENDS SQUARED AND GROUND
46 ADAPTER, AUTO-COLLIMATOR 1-REQ'D
REFLECTOR IS NOT SHOWN IN THIS VIEW
SURFACE "X"
90° ± 0° 0' 15"
90° 0' 0" ± 0° 0' 5"
1/4 R. TYP
.8750 +.0002
CURRENT DESIGN ACTIVITY CAGE CODE 19200
U.S. ARMY
ARMAMENT RESEARCH, DEVELOPMENT AND ENGINEERING CENTER
PICATINNY ARSENAL, N.J. 07806-5000
PART No. 769442
ORIGINAL DATE 18 AUG 1967
U.S. ARMY
FRANKFORD ARSENAL
PHILADELPHIA, PA. 19137
MAGNETIC ALIGNMENT FIXTURE FOR AIMING CIRCLE M2
F 19200
769442

REVISIONS			
LTR	DESCRIPTION	DATE	APPROVED
	INITIAL RELEASE SEE E.O. FT 6536		

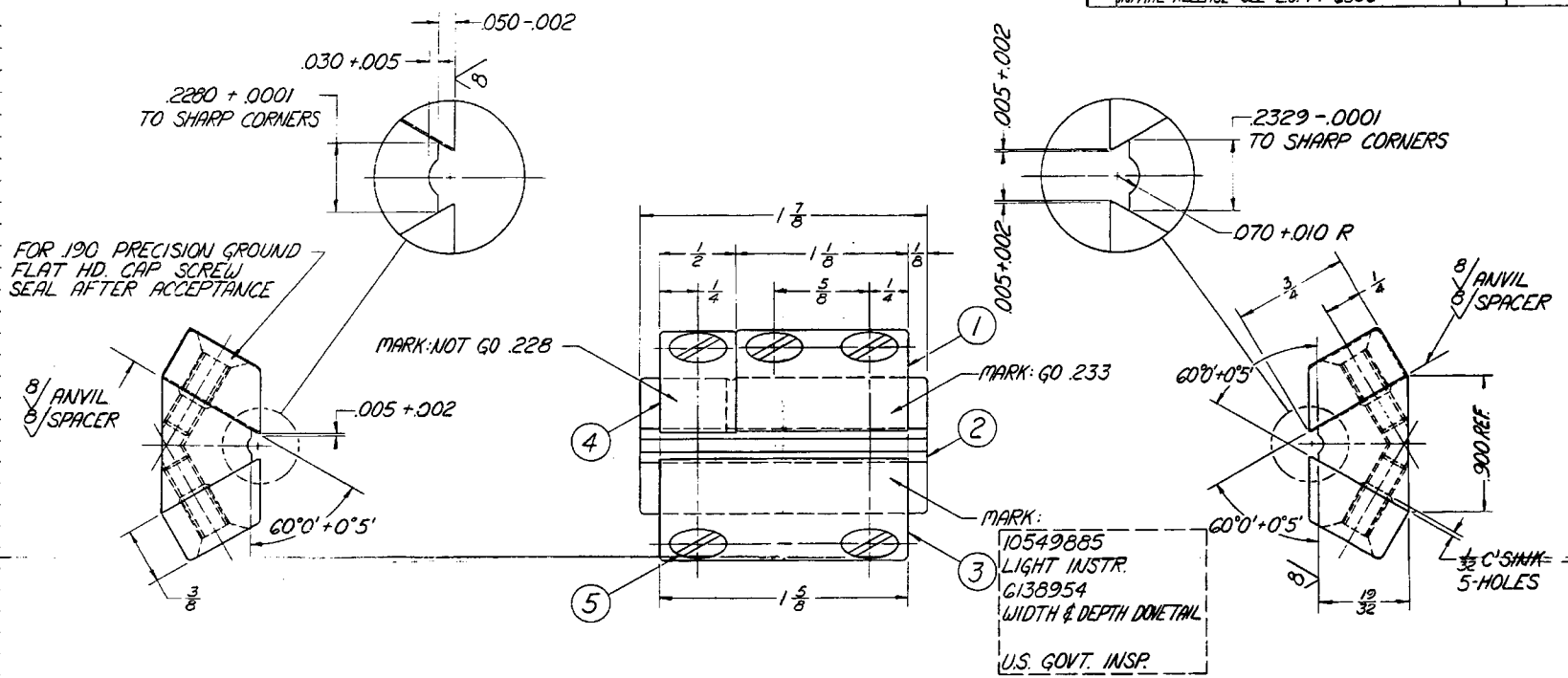

MATERIAL

(1)(2)(3)(4) TOOL STEEL -HDN.
FINISH 63 EXCEPT AS NOTED

(5) SCREW, FLAT HD. CAP 5-REQD
NO. 10 -32NF-2 x 5/8 LG
PRECISION GROUND

APPLICABLE SPECIFICATIONS
GAGE, DIM. CONTROL: MIL-G-10944
DIM. & TOL.: MIL-STD-8

PART No. 10549885

MECHANICAL PROPERTIES		UNLESS OTHERWISE SPECIFIED DIMENSIONS ARE IN INCHES	ORIGINAL DATE 10-10-66
YP		TOLERANCES ON FRACTIONS ± 1/64	DRAFT GEM CHK
YS		DECIMALS ± .010 ANGLES ± 1°	TRACER CHK
EL 2		MATERIAL AS NOTED	ENGR ENGR
RA	BG138954 M2	HEAT TREAT	SUBMITTED
BH	SEE ENGINEERING RECORDS		APPROVED
RH	CG3-66	PROTECTIVE FINISH	
	NEXT ASSY USED ON		
	APPLICATION		
	DO NOT DO APPLY PART NO.		

U. S. ARMY
FRANKFORD ARSENAL
PHILADELPHIA, PA. 19137

DOVETAIL
SNAP GAGE

SIZE	CODE IDENT NO.	DRAWING NO.
C	19200	10549885

SCALE: 2:1 UNIT WT. SHEET 1 OF 1

FC-1E
A

SMUFA Form C3620
11 Dec 64