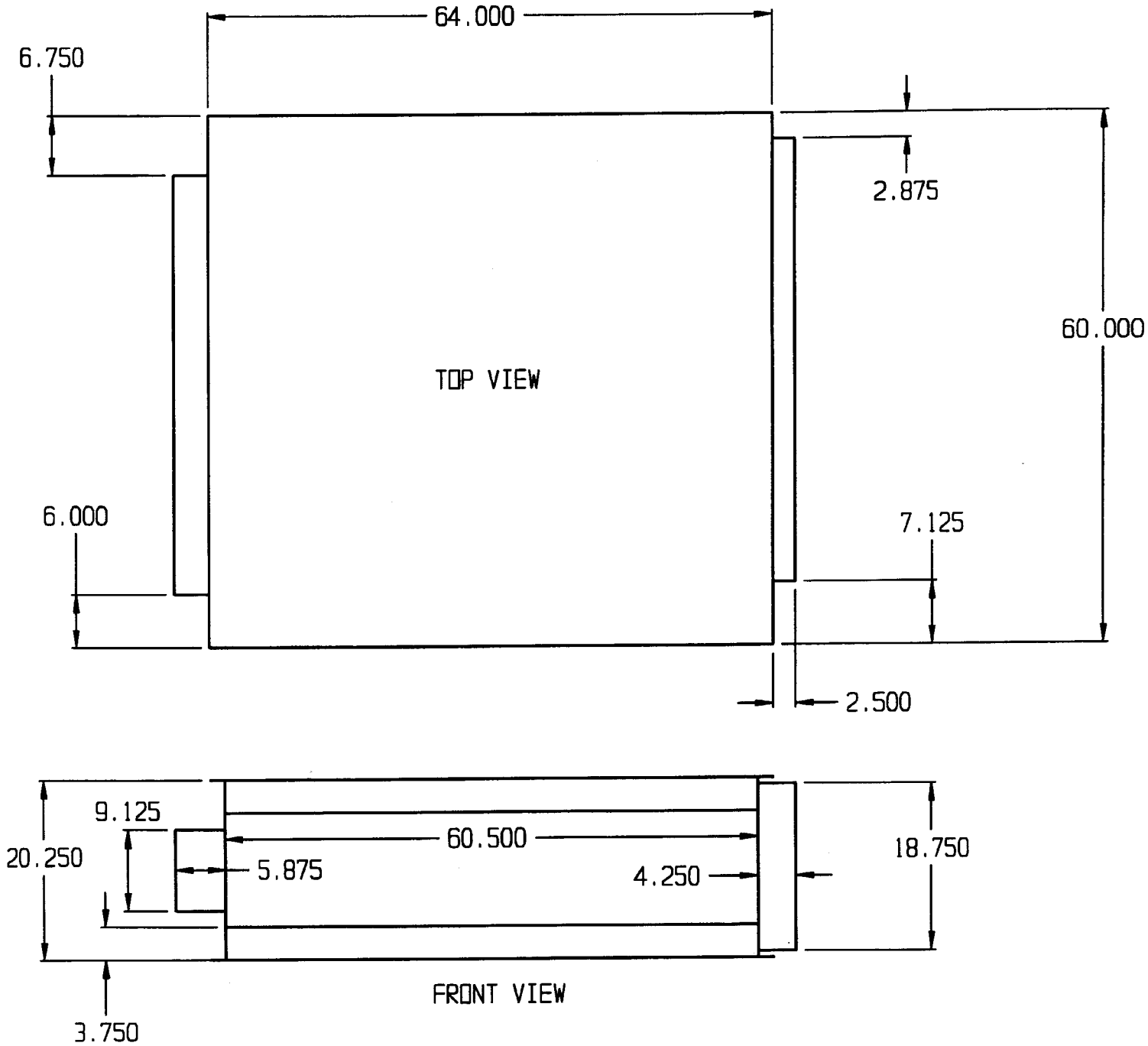Monday, July 12, 2004 13:15:47