DRAWING SIZE C

REVISIONS				
ZONE	LTR	DESCRIPTION	DATE (YR MO DA)	APPROVED
	–	PRODUCT BASELINE ERR: H8A2004	990825	KN
	A	NOR H1A2022/020507	020917	HJS

NOTES:

1–APPLICABLE STANDARDS/SPECIFICATIONS:
A–MIL–STD–100E.
B–SPEC PRF14000050

2–ONLY THE ITEM DESCRIBED ON THIS DRAWING WHEN PROCURED FROM THE VENDOR(S) LISTED HEREON IS APPROVED BY ARDEC PICATINNY ARSENAL, NEW JERSEY 07806–5000 FOR USE IN THE APPLICATION(S) SPECIFIED HEREON. A SUBSITUTE ITEM SHALL NOT BE USED WITHOUT PRIOR APPROVAL BY ARDEC.

3–IDENTIFICATION OF THE APPROVED SOURCE(S) OF SUPPLY HEREON IS NOT TO BE CONSTRUTED AS A GUARANTEE OF PRESENT OR CONTINUED AVAILABILTIY AS A SOURCE OF SUPPLY FOR THE ITEM DESCRIBED ON THIS DRAWING.

4–ITEM IDENTIFICATION: APPLY THE FOLLOWING MARKING TO CONTAINER IN ACCORDANCE WITH MIL–STD–130.
*19200SOCN12984660
MFR– [ ]
MANUFACTURER'S CAGE CODE

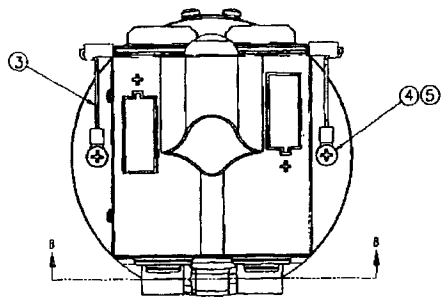

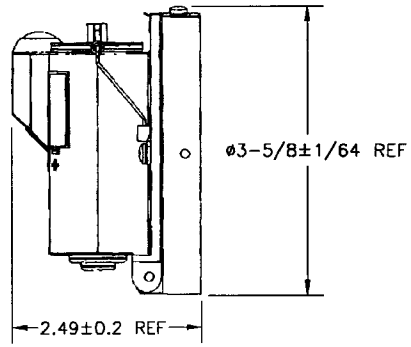

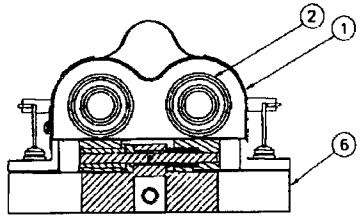

SECTION B–B

ITEM	DESCRIPTION	PART NO.	QTY
1	BATTERY ENCLOSURE ASSY	12984671	1
2	CAP ASSY	12984661	2
3	CAP RETAINER ASSY	SLB9983	2
4	SCREW	MS 51957–26	2
5	WASHER	MS 35338–136	2
6	RING ASSY	12984656	1

APPROVED SOURCE(S) OF SUPPLY				
PART NO.	VENDOR		VENDOR PART NO.	ITEM IDENTIFICATION
	ADDRESS	CAGE CODE		
12984660	SEILER INST. ST. LOUIS, MO.	11934	SLB9995	COLLIMATOR LIGHTING KIT 19200–12984660 MFR–11934–SLB9995

SOURCE CONTROL DRAWING

PART NO. 12984660

DISTRIBUTION STATEMENT A.
APPROVED FOR PUBLIC RELEASE;
DISTRIBUTION IS UNLIMITED.

PMIC			
MECHANICAL PROPERTIES			
YP			
TS		12984644	COLLIMATOR
EL2			
RA			
BH		NEXT ASSY	USED ON
RH		APPLICATION	

DO NOT SCALE DRAWING
UNLESS OTHERWISE SPECIFIED DIMENSIONS ARE IN INCHES
TOLERANCES ON
DECIMAL FRACTION
2 PL ± ±
3 PL ±

THIRD ANGLE PROJECTION

MATL ENGR

DRAWN BY K NAGY DATE(YR-MO-DA) 99-08-25
CHECKER JC ENGINEER DML
DRAWING APPROVAL Douglas M. Laird
DESIGN APPROVAL Stephen Kosovsky

DESIGN ACTIVITY U.S. ARMY
ARMAMENT RESEARCH, DEVELOPMENT AND ENGINEERING CENTER
PICATINNY ARSENAL, NEW JERSEY 07806-5000

COLLIMATOR, LIGHTING KIT

SIZE	CAGE CODE	
C	19200	12984660
SCALE	UNIT WT.	SHEET

DRAWING SIZE C

NOTES:

1. APPLY SPECIFICATION PRF14000050.

REVISIONS				
ZONE	LTR	DESCRIPTION	DATE (YR MO DA)	APPROVED
	–	PRODUCT BASELINE ERR: H8A2004	990825	KN
	A	NOR H1A2022/020507	020917	HJS

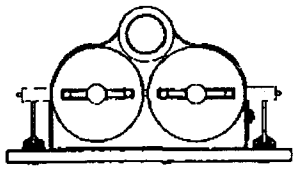

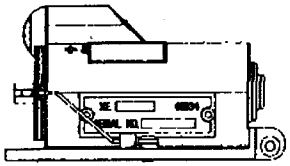

PART NO. 12984671

DISTRIBUTION STATEMENT A.
APPROVED FOR PUBLIC RELEASE;
DISTRIBUTION IS UNLIMITED.

PMIC		
MECHANICAL PROPERTIES		
YP		
TS		
EL2		
RA		
BH		
RH		
	12984660	COLLIMATOR
	NEXT ASSY	USED ON
	APPLICATION	

DO NOT SCALE DRAWING

UNLESS OTHERWISE SPECIFIED DIMENSIONS ARE IN INCHES
TOLERANCES ON
DECIMAL FRACTION
2 PL ± ±
3 PL ±

THIRD ANGLE PROJECTION

MATL ENGR

DRAWN BY K NAGY	DATE(YR-MO-DA) 99-08-25
CHECKER JC	ENGINEER DML
DRAWING APPROVAL Douglas M. Laird	
DESIGN APPROVAL Stephen Kosowsky	

DESIGN ACTIVITY U.S. ARMY
ARMAMENT RESEARCH, DEVELOPMENT AND ENGINEERING CENTER
PICATINNY ARSENAL, NEW JERSEY 07806-5000

BATTERY ENCLOSURE ASSEMBLY

SIZE	CAGE CODE	
C	19200	12984671
SCALE	UNIT WT.	SHEET

DRAWING SIZE C

REVISIONS				
MODEL REV	DRAW REV	DESCRIPTION	DATE(YEAR-MO-DA)	APPROVED
N/A	-	PRODUCT BASELINE ERR H8A2004	1999-08-25	KN
A	A	NOR H3A5000 / 2003-06-17	2003-07-25	RLV

NOTES:

1. APPLICABLE STANDARDS/SPECIFICATIONS:
   A. ASME Y14.100-2000
   B. MIL-F-13926

2. QAP 12984661 APPLIES.

3. SET GROOVED STUD 12984812 THRU SPRING, BATTERY CONTACT 12984810 AND TIGHTLY INTO CAP 12984809. ENSURE SPRING WILL NOT ROTATE ABOUT GROOVED STUD.

4. APPLY SEALING COMPOUND A-A-59293 TO BOTTOM OF MAGNET, CAP 12984820. PRESS MAGNET INTO PLACE, FLUSH WITH TOP OF CAP 12984661.

5. APPLY SEALING COMPOUND A-A-59293 TO BOTTOM OF CUSHION, CAP 12984818 AND PRESS INTO PLACE, FLUSH WITH INSIDE OF CAP.

6. APPLY GREASE, SAE AMS-G-4343 TO PACKING, PREFORMED SAE AS3578-021 AND INSTALL PACKING INTO GROOVE IN CAP.

7. FINISH AREA MARKED "P" 4.4 PLUS FINISH 20.24 OF MIL-STD-171, COLOR GREEN 34094 OF FED-STD-595. APPLY AND INSPECT IN ACCORDANCE WITH MIL-C-53072.

8. APPLY IDENTIFICATION PER MIL-STD-130.

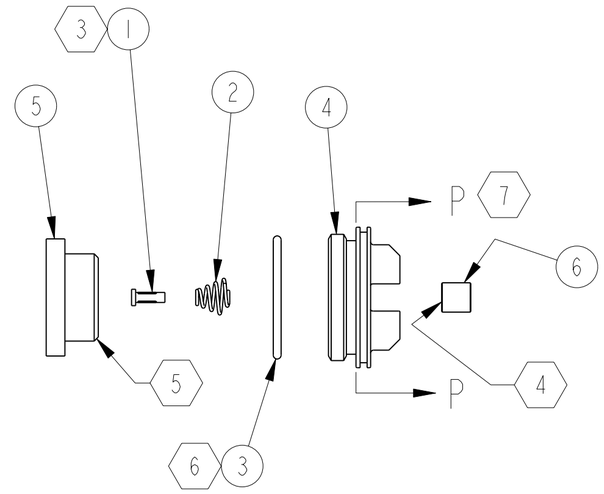

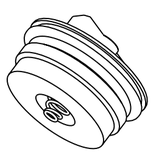

ISO VIEW

PARTS LIST				
ITEM NO.	DESCRIPTION	PART NO.	REMARKS	QTY
1	GROOVED STUD	12984812		1
2	SPRING, BATTERY CONTACT	12984810		1
3	PACKING, PREFORMED	SAE AS3578-021	IN ACCORDANCE WITH SAE AS3578	1
4	CAP	12984809		1
5	CUSHION, CAP	12984818		1
6	MAGNET, CAP	12984820		1
REF	GREASE	AMS-G-4343	IN ACCORDANCE WITH SAE AMS-G-4343	AR

THIS DRAWING WAS GENERATED FROM A SOLID MODEL AND IS CAD MAINTAINED. CHANGES SHALL BE INCORPORATED BY THE DESIGN ACTIVITY.

PART NO. 12984661

DISTRIBUTION STATEMENT A:
APPROVED FOR PUBLIC RELEASE;
DISTRIBUTION IS UNLIMITED.

PMIC				
MECHANICAL PROPERTIES		12984725	M137	
			M18	
YP			M17	
TS		12984693	M171	
EL2			M138	
RA			M137	
BH		NEXT ASSY	USED ON	
RH		APPLICATION		

DO NOT SCALE DRAWING

UNLESS OTHERWISE SPECIFIED DIMENSIONS ARE IN INCHES

TOLERANCE ON ANGLES ± °
2 PLACE DECIMALS ±
3 PLACE DECIMALS ±

THIRD ANGLE PROJECTION

MATL ENGR | MODELED BY

CONTRACT NUMBER

CONTRACTOR

DRAWN BY	DATE(YEAR-MO-DA)
EJY	2003-02-25
CHECKER JS	ENGINEER
ENGINEER	QUALITY ENGINEER

DRAWING APPROVAL: RON BOESGAARD 2003-06-17

DESIGN APPROVAL: MIKE DOYLE 2003-06-17

DESIGN ACTIVITY
US ARMY
ARMAMENT RESEARCH, DEVELOPMENT AND ENGINEERING CENTER
PICATINNY ARSENAL, NEW JERSEY 07806-5000

CAP ASSEMBLY

SIZE	CAGE CODE	DWG NO.
C	19200	12984661

SCALE 1/1 | UNIT WT. | SHEET 1 OF 1

FORMAT: C_TACOM_ENG_1_0

DRAWING SIZE D

REVISIONS				
MODEL REV	DRAW REV	DESCRIPTION	DATE(YEAR-MO-DA)	APPROVED
-	-	PRODUCT BASELINE ERR H3A5000	2003-07-25	RLV

NOTES:

1. APPLICABLE STANDARDS/SPECIFICATIONS:
   A. ASME Y14.100-2000
   B. ASME Y14.5M-1994
   C. MIL-F-13926

2. MATERIAL: FREE CUTTING BRASS, UNS C36000, TEMPER H02. PER ASTM B 16/B 16M.

3. UNLESS OTHERWISE SPECIFIED ALL SURFACES 125

4. FINISH 4.10 OF MIL-STD-171. FINAL PROTECTIVE FINISH TO BE APPLIED AT END ITEM ASSY.

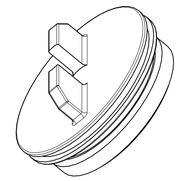

ISO VIEW

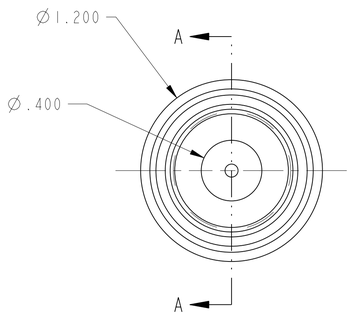

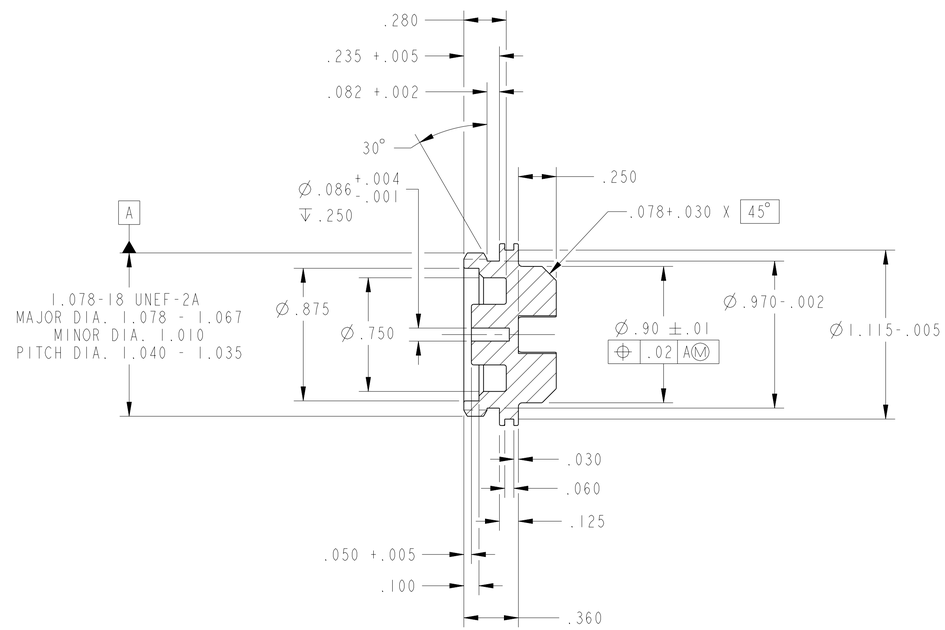

SECTION A-A

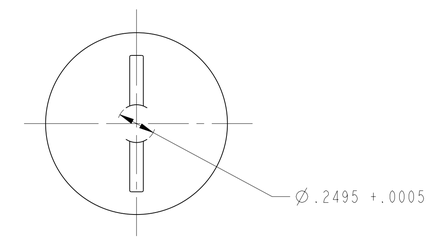

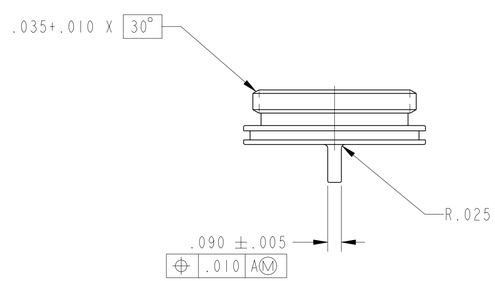

THIS DRAWING WAS GENERATED FROM A SOLID MODEL AND IS CAD MAINTAINED. CHANGES SHALL BE INCORPORATED BY THE DESIGN ACTIVITY.

PART NO. 12984809

DISTRIBUTION STATEMENT A.
APPROVED FOR PUBLIC RELEASE;
DISTRIBUTION IS UNLIMITED.

PMIC			DO NOT SCALE DRAWING UNLESS OTHERWISE SPECIFIED DIMENSIONS ARE IN INCHES TOLERANCES ON ANGLES ± 0°30' 2 PLACE DECIMALS ± . 3 PLACE DECIMALS ± .005	CONTRACT NUMBER CONTRACTOR	DESIGN ACTIVITY US ARMY ARMAMENT RESEARCH, DEVELOPMENT AND ENGINEERING CENTER PICATINNY ARSENAL, NEW JERSEY 07806-5000
MECHANICAL PROPERTIES		M138 M137 M171 M18 M17	THIRD ANGLE PROJECTION	DRAWN BY JTM DATE(YEAR-MO-DA) 2003-01-23 CHECKER J. STANILIOUS ENGINEER ENGINEER QUALITY ENGINEER	CAP
YP TS EL2 RA BH RH	12984661			DRAWING APPROVAL RON BOESGAARD 2003-06-17	SIZE D CAGE CODE 19200 DWG NO. 12984809
	NEXT ASSY	USED ON	MATL ENGR MODELED BY	DESIGN APPROVAL MIKE DOYLE 2003-06-17	SCALE 2/1 UNIT WT. SHEET 1 OF 1
	APPLICATION				

FORMAT: D_TACOM_ENG_1_0

DRAWING SIZE C

REVISIONS				
MODEL REV	DRAW REV	DESCRIPTION	DATE(YEAR-MO-DA)	APPROVED
-	-	PRODUCT BASELINE ERR H3A5000	2003-07-25	RLV

NOTES:

1. APPLICABLE STANDARDS/SPECIFICATIONS:
   A. ASME Y14.100-2000
   B. ASME Y14.5M-1994
   C. MIL-F-13926

2. MATERIAL: PER ASTM D 2000 MIBC 607.
   (BLACK NEOPRENE RUBBER, SHORE A
   DUROMETER 70-80)

3. UNLESS OTHERWISE SPECIFIED ALL SURFACES 125

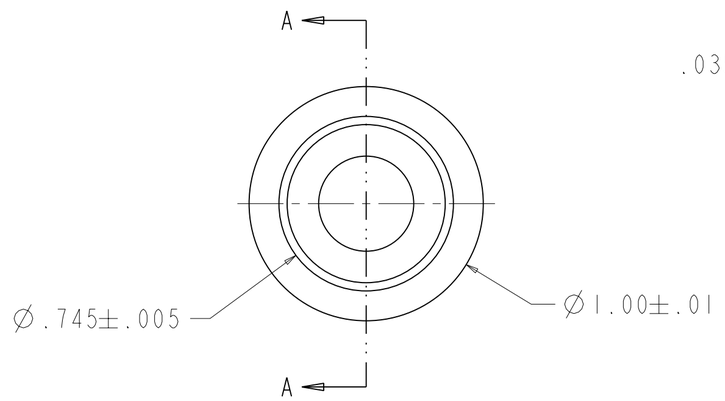

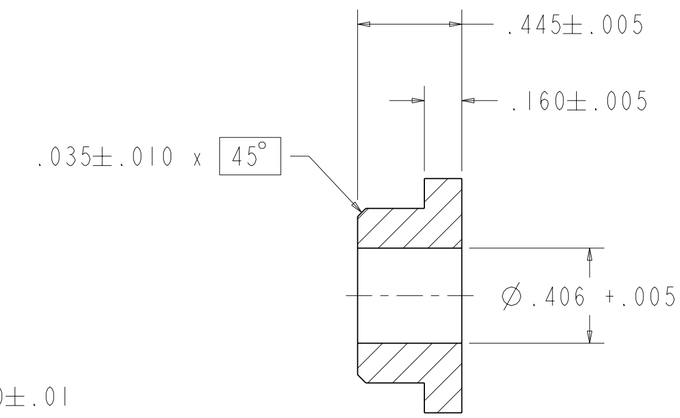

SECTION A-A

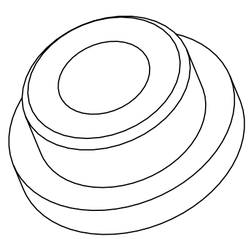

ISO VIEW

THIS DRAWING WAS GENERATED FROM A SOLID MODEL AND IS CAD MAINTAINED. CHANGES SHALL BE INCORPORATED BY THE DESIGN ACTIVITY.

PART NO. 12984818

DISTRIBUTION STATEMENT A:
APPROVED FOR PUBLIC RELEASE;
DISTRIBUTION IS UNLIMITED.

PMIC				
MECHANICAL PROPERTIES				
YP				
TS				
EL2				
RA				
BH				
RH				
		12984661	M171	
			M138	
			M137	
			M18	
			M17	
		NEXT ASSY	USED ON	
		APPLICATION		

DO NOT SCALE DRAWING

UNLESS OTHERWISE SPECIFIED DIMENSIONS ARE IN INCHES

TOLERANCE ON ANGLES ± °
2 PLACE DECIMALS ±
3 PLACE DECIMALS ±

THIRD ANGLE PROJECTION

MATL ENGR | MODELED BY

CONTRACT NUMBER	
CONTRACTOR	
DRAWN BY JTM	DATE(YEAR-MO-DA) 2003-01-23
CHECKER J. STANILIOUS	ENGINEER
ENGINEER	QUALITY ENGINEER
DRAWING APPROVAL RON BOESGAARD	2003-06-17
DESIGN APPROVAL MIKE DOYLE	2003-06-17

DESIGN ACTIVITY
US ARMY
ARMAMENT RESEARCH, DEVELOPMENT AND ENGINEERING CENTER
PICATINNY ARSENAL, NEW JERSEY 07806-5000

CUSHION, CAP

SIZE	CAGE CODE	DWG NO.
C	19200	12984818

SCALE 2/1 | UNIT WT UNIT_WT[.1][.1] KG | SHEET 1 OF 1

FORMAT: C_TACOM_ENG_1_0

DRAWING SIZE C

REVISIONS				
MODEL REV	DRAW REV	DESCRIPTION	DATE(YEAR-MO-DA)	APPROVED
-	-	PRODUCT BASELINE ERR H3A5000	2003-07-25	RLV
A	A	NOR H3A5013 / 2003-11-04	2003-11-25	RJC

NOTES:

1. APPLICABLE STANDARDS/SPECIFICATIONS:
   A. ASME Y14.100-2000
   B. ASME Y14.5M-1994

2. MATERIAL: 305 STAINLESS STEEL

3. PROTECTIVE FINISH: PASSIVATED

4. THE FOLLOWING SPECIFICATIONS PERTAIN TO YOUR STANDARD #2 GROOVED STUDS:
   EXPANDED DIAMETER: .096
   GROOVE LENGTH: STANDARD
   GROOVE LOCATION: STANDARD
   NOMINAL DIAMETER/WIDTH: .086/.250

5. IDENTIFICATION OF THE SUGGESTED SOURCE(S) OF SUPPLY HEREON IS NOT TO BE CONSTRUED AS A GUARANTEE OF PRESENT OR CONTINUED AVAILABILITY AS A SOURCE OF SUPPLY FOR THE ITEM(S).

6. ITEM IDENTIFICATION: APPLY THE FOLLOWING MARKING TO CONTAINER IN ACCORDANCE WITH MIL-STD-130.
   "19200-12984812"
   MFR-[ ]-[ ]
   MANUFACTURERS
   CAGE CODE PART NO.

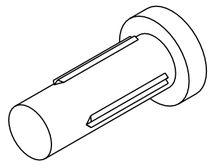

ISO VIEW

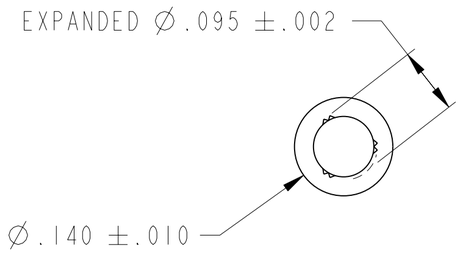

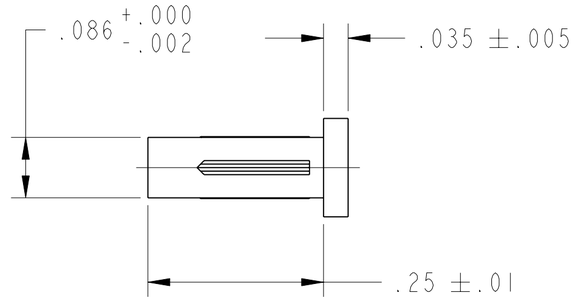

SUGGESTED SOURCE(S) OF SUPPLY			
PART NO.	VENDOR		VENDOR PART NO.
	ADDRESS	CAGE CODE	
12984812	DRIV-LOK INC. 140 PARK AVE., SYCAMORE, IL 60178	83584	F17190

THIS DRAWING WAS GENERATED FROM A SOLID MODEL AND IS CAD MAINTAINED. CHANGES SHALL BE INCORPORATED BY THE DESIGN ACTIVITY.

VENDOR ITEM DRAWING

PART NO. 12984812

PMIC			
MECHANICAL PROPERTIES			
YP			
TS			
EL2			
RA			
BH			
RH			

NEXT ASSY	USED ON
12984679	M154
	M140A1
	M139A1
12984661	M138
	M18
	M17
	M137
	M171

APPLICATION

DO NOT SCALE DRAWING

UNLESS OTHERWISE SPECIFIED DIMENSIONS ARE IN INCHES

TOLERANCE ON ANGLES ± °
2 PLACE DECIMALS ±
3 PLACE DECIMALS ±

THIRD ANGLE PROJECTION

MATL ENGR | MODELED BY

CONTRACT NUMBER

CONTRACTOR

DRAWN BY JTM	DATE(YEAR-MO-DA) 2003-01-23
CHECKER J. STANILIOUS	ENGINEER
ENGINEER	QUALITY ENGINEER
DRAWING APPROVAL RON BOESGAARD	2003-06-17
DESIGN APPROVAL MIKE DOYLE	2003-06-17

DESIGN ACTIVITY
US ARMY
ARMAMENT RESEARCH, DEVELOPMENT AND ENGINEERING CENTER
PICATINNY ARSENAL, NEW JERSEY 07806-5000

GROOVED STUD (FLAT HEAD)

SIZE	CAGE CODE	DWG NO.
C	19200	12984812

SCALE 6/1 | UNIT WT. | SHEET 1 OF 1

DISTRIBUTION STATEMENT A.
APPROVED FOR PUBLIC RELEASE;
DISTRIBUTION IS UNLIMITED.

FORMAT: C_TACOM_ENG_1_0

DRAWING SIZE C

REVISIONS				
MODEL REV	DRAW REV	DESCRIPTION	DATE(YEAR-MO-DA)	APPROVED
-	-	PRODUCT BASELINE ERR H3A5000	2003-07-25	RLV

NOTES:

1. APPLICABLE STANDARDS/SPECIFICATIONS:
   A. ASME Y14.100-2000
   B. ASME Y14.5M-1994

2. PART DESCRIPTION: BATTERY SPRING CONTACT

3. TECHNICAL INFORMATION:
   A. MATERIAL: .025 DIAMETER SPRING STEEL
   B. FINISH: NICKEL PLATED

4. ONLY THE ITEM DESCRIBED ON THIS DRAWING WHEN PROCURED FROM THE VENDOR(S) LISTED HEREON IS APPROVED BY ARDEC PICATINNY ARSENAL, NEW JERSEY 07806-5000 FOR USE IN THE APPLICATION(S) SPECIFIED HEREON. A SUBSTITUTE ITEM SHALL NOT BE USED WITHOUT PRIOR APPROVAL BY ARDEC.

5. IDENTIFICATION OF THE APPROVED SOURCE(S) OF SUPPLY HEREON IS NOT TO BE CONSTRUED AS A GUARANTEE OF PRESENT OR CONTINUED AVAILABILITY AS A SOURCE OF SUPPLY FOR THE ITEM DESCRIBED ON THE DRAWING.

6. ITEM IDENTIFICATION: APPLY THE FOLLOWING MARKING TO CONTAINER IN ACCORDANCE WITH MIL-STD-130.
   "19200S0CN12984810"
   MFR-[ ]-[ ]
   MANUFACTURERS
   CAGE CODE PART NO.

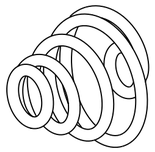

ISO VIEW

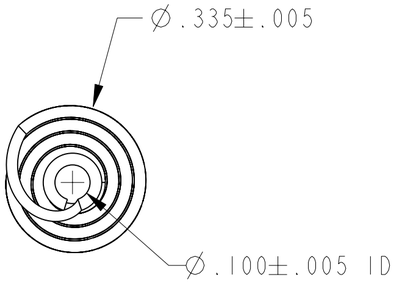

(BACK) MOUNTING

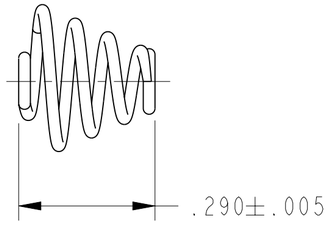

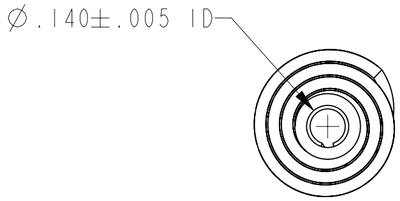

(FRONT) CONTACT

APPROVED SOURCE(S) OF SUPPLY			
PART NO.	VENDOR		VENDOR PART NO.
	ADDRESS	CAGE CODE	
12984810	KEYSTONE ELECTRONICS CORP. 31-07 20TH ROAD ASTORIA, NY 11105	91833	211

THIS DRAWING WAS GENERATED FROM A SOLID MODEL AND IS CAD MAINTAINED. CHANGES SHALL BE INCORPORATED BY THE DESIGN ACTIVITY.

SOURCE CONTROL DRAWING

PART NO. 12984810

PMIC			
MECHANICAL PROPERTIES			
YP			
TS			
EL2			
RA			
BH			
RH			

NEXT ASSY	USED ON
12984661	M171
	M137, M138
	M17, M18
12984679	M139A1, M140A1, M154
12984813	M139, M171
	M137, M138
	M17, M18

APPLICATION

DO NOT SCALE DRAWING

UNLESS OTHERWISE SPECIFIED DIMENSIONS ARE IN INCHES

TOLERANCE ON ANGLES ± °
2 PLACE DECIMALS ±
3 PLACE DECIMALS ±

THIRD ANGLE PROJECTION

MATL ENGR | MODELED BY

CONTRACT NUMBER

CONTRACTOR

DRAWN BY EJY	DATE(YEAR-MO-DA) 2003-02-26
CHECKER J. STANILIOUS	ENGINEER
ENGINEER	QUALITY ENGINEER
DRAWING APPROVAL RON BOESGAARD	2003-06-17
DESIGN APPROVAL MIKE DOYLE	2003-06-17

DESIGN ACTIVITY
US ARMY
ARMAMENT RESEARCH, DEVELOPMENT AND ENGINEERING CENTER
PICATINNY ARSENAL, NEW JERSEY 07806-5000

SPRING, BATTERY CONTACT

SIZE	CAGE CODE	DWG NO.
C	19200	12984810

SCALE	UNIT WT.	SHEET
4/1		1 OF 1

DISTRIBUTION STATEMENT A:
APPROVED FOR PUBLIC RELEASE; DISTRIBUTION IS UNLIMITED.

FORMAT: C_TACOM_ENG_1_0

DRAWING SIZE C

REVISIONS				
MODEL REV	DRAW REV	DESCRIPTION	DATE(YEAR-MO-DA)	APPROVED
-	-	PRODUCT BASELINE ERR H3A5000	2003-07-25	RLV

NOTES:

1. APPLICABLE STANDARDS/SPECIFICATIONS:
   A. ASME Y14.100-2000
   B. ASME Y14.5M-1994
2. MATERIAL: SINTERED ALNICO 8, MAGNETIZED.
3. UNLESS OTHERWISE SPECIFIED ALL SURFACES 125
4. IDENTIFICATION OF THE SUGGESTED SOURCE(S) OF SUPPLY HEREON IS NOT TO BE CONSTRUED AS A GUARANTEE OF PRESENT OR CONTINUED AVAILABILITY AS A SOURCE OF SUPPLY FOR THE ITEM(S).
5. ITEM IDENTIFICATION: APPLY THE FOLLOWING MARKING TO CONTAINER IN ACCORDANCE WITH MIL-STD-130.
   "19200-12984820"
   MFR-[ ]-[ ]
   MANUFACTURERS
   CAGE CODE PART NO.

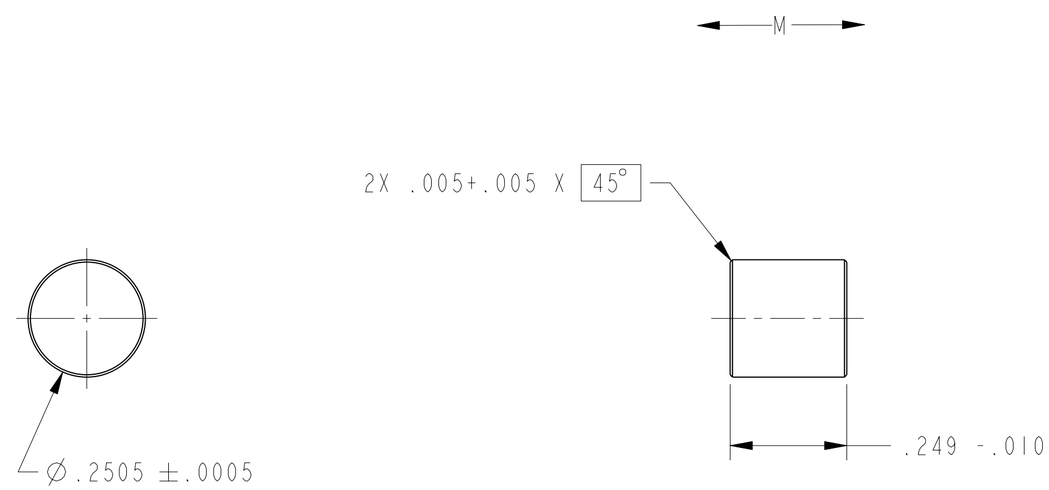

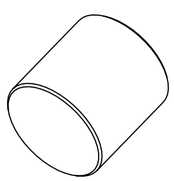

ISO VIEW

SUGGESTED SOURCE(S) OF SUPPLY			
PART NO.	VENDOR		VENDOR PART NO.
	ADDRESS	CAGE CODE	
12984820	THE PERMANENT MAGNET CO., INC. P.O. BOX 26226 INDIANAPOLIS, INDIANA 46226	23654	SLB10027

THIS DRAWING WAS GENERATED FROM A SOLID MODEL AND IS CAD MAINTAINED. CHANGES SHALL BE INCORPORATED BY THE DESIGN ACTIVITY.

VENDOR ITEM DRAWING

PART NO. 12984820

DISTRIBUTION STATEMENT A:
APPROVED FOR PUBLIC RELEASE;
DISTRIBUTION IS UNLIMITED.

PMIC			
MECHANICAL PROPERTIES			
YP			
TS			
EL2			
RA			
BH			
RH			

NEXT ASSY	USED ON
12984661	M171
	M138
	M137
	M18
	M17

APPLICATION

DO NOT SCALE DRAWING
UNLESS OTHERWISE SPECIFIED DIMENSIONS ARE IN INCHES
TOLERANCE ON ANGLES ± °
2 PLACE DECIMALS ±
3 PLACE DECIMALS ±
THIRD ANGLE PROJECTION

MATL ENGR | MODELED BY

CONTRACT NUMBER
CONTRACTOR
DRAWN BY EJY | DATE(YEAR-MO-DA) 2003-02-25
CHECKER J. STANILIOUS | ENGINEER
ENGINEER | QUALITY ENGINEER
DRAWING APPROVAL RON BOESGAARD 2003-06-17
DESIGN APPROVAL MIKE DOYLE 2003-06-17

DESIGN ACTIVITY
US ARMY
ARMAMENT RESEARCH, DEVELOPMENT AND ENGINEERING CENTER
PICATINNY ARSENAL, NEW JERSEY 07806-5000

MAGNET, CAP

SIZE	CAGE CODE	DWG NO.
C	19200	12984820

SCALE 4/1 | UNIT WT. | SHEET 1 OF 1

FORMAT: C_TACOM_ENG_1_0

DRAWING SIZE C

REVISIONS				
ZONE	LTR	DESCRIPTION	DATE (YR MO DA)	APPROVED
	–	PRODUCT BASELINE ERR: H8A2004	990825	KN
	A	NOR H1A2022/020507	020917	HJS

NOTES:

1. IDENTIFY IN ACCORDANCE WITH MIL-STD-130.

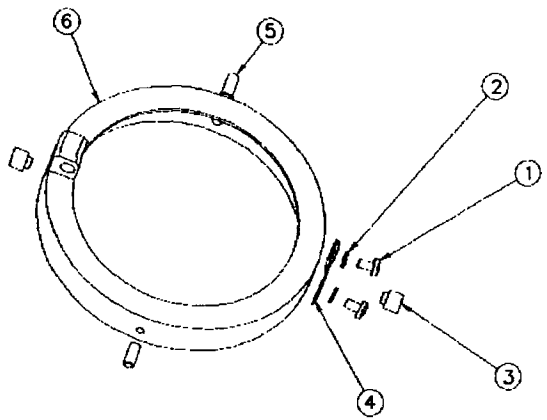

ITEM	DESCRIPTION	PART NO.	QTY
1	SCREW	MS51957-12	2
2	WASHER	MS35338-135	2
3	SETSCREW	NASM 51045-49	2
4	LATCH	12984657	1
5	PLUNGER, BALL	10556141	2
6	RING	12984663	1

PART NO. 12984656

DISTRIBUTION STATEMENT A.
APPROVED FOR PUBLIC RELEASE;
DISTRIBUTION IS UNLIMITED.

PMIC		
MECHANICAL PROPERTIES		
YP		
TS		
EL2		
RA		
BH		
RH		

NEXT ASSY	USED ON
12984660	COLLIMATOR
APPLICATION	

DO NOT SCALE DRAWING

UNLESS OTHERWISE SPECIFIED DIMENSIONS ARE IN INCHES
TOLERANCES ON
DECIMAL FRACTION
2 PL ± ±
3 PL ±

THIRD ANGLE PROJECTION

MATL ENGR

DRAWN BY K NAGY
DATE(YR-MO-DA) 99-08-25
CHECKER JC
ENGINEER DML
DRAWING APPROVAL Douglas M. Laird
DESIGN APPROVAL Stephen Kosowsky

DESIGN ACTIVITY U.S. ARMY
ARMAMENT RESEARCH, DEVELOPMENT AND ENGINEERING CENTER
PICATINNY ARSENAL, NEW JERSEY 07806-5000

RING ASSEMBLY

SIZE	CAGE CODE	
C	19200	12984656
SCALE	UNIT WT.	SHEET

DRAWING SIZE C

REVISIONS				
ZONE	LTR	DESCRIPTION	DATE (YR MO DA)	APPROVED
	–	PRODUCT BASELINE ERR: H8A2004	990825	KN
	A	NOR H1A2022/020507	020917	HJS

NOTES:

1. SPEC ASME Y14.5 AND MIL-STD-100E APPLY.
2. MATERIAL: .0159 TH. (B&S 26 GA) PHOSPHOR BRONZE, GRADE A, ASTM B103, SPRING TEMPER.
3. FINISH NO. 3.2 OF MIL-STD-171.

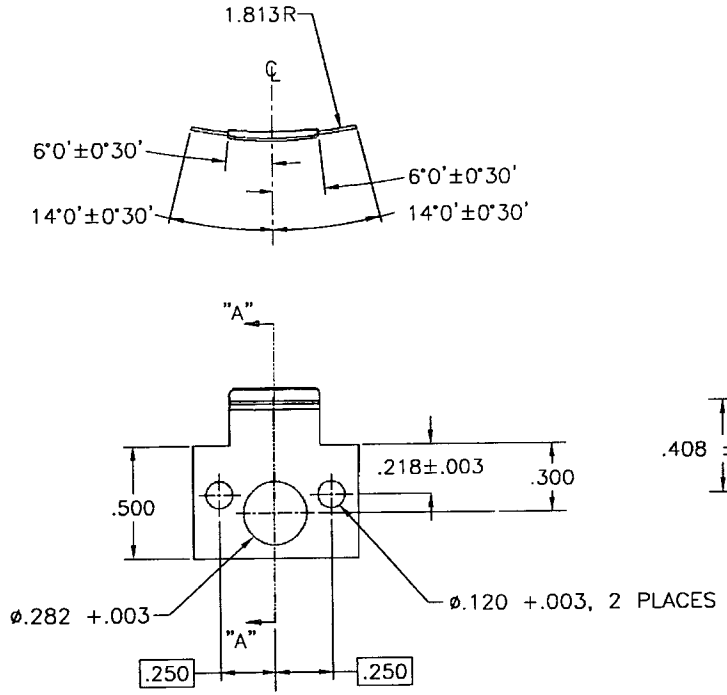

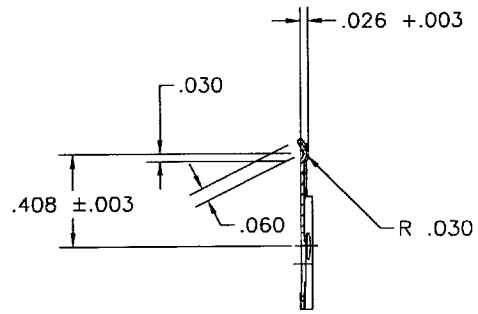

SECTION A–A

PART NO. 12984657

DISTRIBUTION STATEMENT A.
APPROVED FOR PUBLIC RELEASE;
DISTRIBUTION IS UNLIMITED.

PMIC		
MECHANICAL PROPERTIES		
YP		
TS		
EL2		
RA		
BH		
RH		

12984656	COLLIMATOR
NEXT ASSY	USED ON
APPLICATION	

DO NOT SCALE DRAWING

UNLESS OTHERWISE SPECIFIED DIMENSIONS ARE IN INCHES
TOLERANCES ON
DECIMAL FRACTION
2 PL ± ±
3 PL ±

THIRD ANGLE PROJECTION

MATL ENGR

DRAWN BY	DATE(YR-MO-DA)
K NAGY	99-08-25
CHECKER JC	ENGINEER DML
DRAWING APPROVAL Douglas M. Laird	
DESIGN APPROVAL Stephen Kosowsky	

DESIGN ACTIVITY U.S. ARMY
ARMAMENT RESEARCH, DEVELOPMENT AND ENGINEERING CENTER
PICATINNY ARSENAL, NEW JERSEY 07806-5000

LATCH

SIZE	CAGE CODE	
C	19200	12984657
SCALE 3/1	UNIT WT.	SHEET

DRAWING SIZE C

ZONE	LTR	DESCRIPTION	DATE (YR MO DA)	APPROVED
	–	PRODUCT BASELINE ERR: H8A2004	990825	KN
	A	NOR H1A2022/020507	020917	HJS

NOTES:
1. SPEC ASME Y14.5M APPLIES.
2. CASTING, NONFERROUS ALLOY 355.0 OR 356.0 TEMPER T6, ASTM B26/26M. ALTERNATIVE: ALUMINUM ALLOY 2024 OR 6061, TEMPER T3 THRU T6, SPEC WW-T-700/3 OR WW-T-700/6 OR ASTM B221.
3. 125 ALL SURFACES EXCEPT AS NOTED.
4. CASTING TOLERANCE: ±.005 PER INCH OF LENGTH OR ±.015 WHICHEVER IS GREATER.
5. CASTING QUALITY PER CLASS 4, SPEC AMS-STD-2175.
6. FINISH 7.2.1 OR MIL-STD-171, EXCEPT SURFACES MARKED "X" FINISH 20.24 OR MIL-STD-171, COLOR GREEN 34094 OF FED-STD-595. APPLY AND INSPECT IN ACCORDANCE WITH MIL-C-53072.

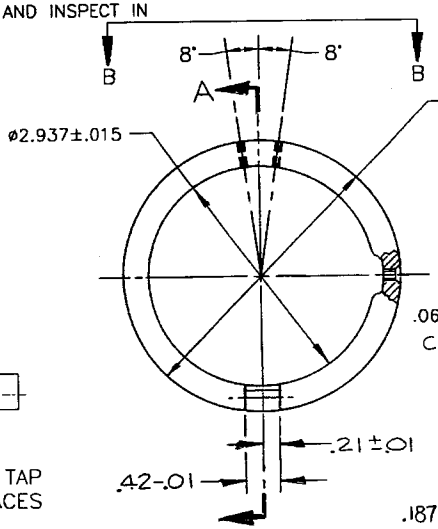

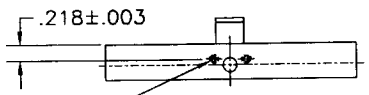

DRILL #44 (.086) THRU, TAP 4-40 UNC-28 THRU, 2 PLACES

VIEW B-B

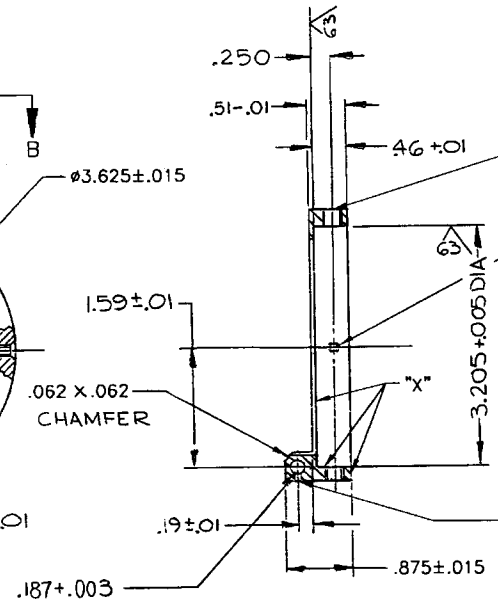

No. 7 (.201) DRILL .250-20 UNC-2B 2 HOLES (180° APART)

No. 33 (.113) DRILL .138-40 UNF-2B 90° CSK TO .17 +.01 DIA. 2- HOLES 180° APART

No. 54 (.055) DRILL (ONE SIDE ONLY ON CENTER LINE ± .01)

PART NO. 12984663

DISTRIBUTION STATEMENT A.
APPROVED FOR PUBLIC RELEASE;
DISTRIBUTION IS UNLIMITED.

PMIC		
MECHANICAL PROPERTIES		
YP		
TS		
EL2		
RA		
BH	12984656	COLLIMATOR
RH	NEXT ASSY	USED ON
	APPLICATION	

DO NOT SCALE DRAWING
UNLESS OTHERWISE SPECIFIED DIMENSIONS ARE IN INCHES
TOLERANCES ON
DECIMAL: 2 PL ± .01, 3 PL ± .005
FRACTION: ± 1/64
THIRD ANGLE PROJECTION
MATL ENGR

DRAWN BY: K NAGY — DATE(YR-MO-DA): 99-08-25
CHECKER: JC — ENGINEER: DML
DRAWING APPROVAL: Douglas M. Laird
DESIGN APPROVAL: Stephen Kosovsky

DESIGN ACTIVITY: U.S. ARMY ARMAMENT RESEARCH, DEVELOPMENT AND ENGINEERING CENTER PICATINNY ARSENAL, NEW JERSEY 07806-5000

RING

SIZE	CAGE CODE	
C	19200	12984663
SCALE	UNIT WT.	SHEET

REVISIONS			
LTR	DESCRIPTION	DATE	APPROVED
—	PROTOTYPE RELEASE ERR FRAF X3045	—	—
—	PRODUCTION RELEASE SEE ERR F8A2506	77-07-22	DML M
A	NOR F2A2048/82-08-24	83-03-15	T.T. DML

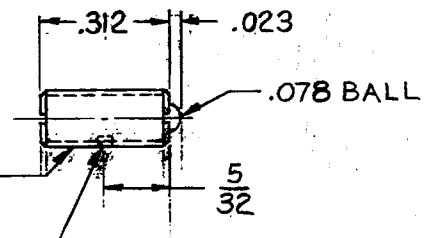

U S ARMY ARMAMENT RESEARCH AND DEVELOPMENT COMMAND
DOVER, NEW JERSEY 07801

SUGGESTED SOURCE(S) OF SUPPLY	
VENDOR	VENDOR PART NO.
VLIER ENGINEERING CORP (CODE IDENT NO. 01226) 8900 SANTA MONICA BLVD LOS ANGELES CALIF 90069	SSB-48N-00003

NOTES:
1. BODY
   CORROSION RESISTING STEEL-300 SERIES.
2. BALL
   CORROSION RESISTING STEEL-440C
   TEMPER ROCKWELL C55 MIN.
3. SPRING
   CORROSION RESISTING STEEL-17-7PH
4. ALL PARTS PASSIVATED.
5. END PRESSURE
   INITIAL = 1/2 LBS
   FINAL = 1. LBS

SPECIFICATION CONTROL DRAWING IDENT NO. 10556141

PREPARED IN ACCORDANCE WITH MIL-STD-100A

MIN. MECHANICAL PROPERTIES			
YS			
TS		F10556235	COLLIMATOR
EL 2		SEE ENGINEERING RECORDS	
RA		NEXT ASSY	USED ON
BH		APPLICATION	
RH		DO NOT ~~DO~~ APPLY IDENTIFICATION ~~PER MIL-STD-130~~	

UNLESS OTHERWISE SPECIFIED DIMENSIONS ARE IN INCHES
TOLERANCES ON FRACTIONS ± DECIMALS ± ANGLES ±
MATERIAL: SEE NOTES 1-2-3
HEAT TREAT:
PROTECTIVE FINISH: SEE NOTE 4

ORIGINAL DATE: 74 JUN 14
DRAFT: JLG CHK: JLG
TRACER: CHK:
ENGR: V. Kari ENGR: DML
SUBMITTED: J. H. Wiland
APPROVED: [signature]

U. S. ARMY
FRANKFORD ARSENAL
PHILADELPHIA, PA. 19137

PLUNGER, BALL

SIZE: B CODE IDENT NO.: 19200 CURRENT DRAWING NO.: 10556141
SCALE: 4:1 UNIT WT. SHEET 1 OF 1

SMUPA Form 1073, 15 Jun 72 (Supersedes edition of 7 Jun 66)