Friday, April 16, 2004 14:17:22

REVISION			
LTR	DESCRIPTION	DATE	APPROVED
-	PRODUCT BASELINE	04-XX-XX	

NOTES:

1. THIS DRAWING SHALL BE INTERPRETED IN ACCORDANCE WITH APPLICABLE STANDARDS LISTED IN DOD-STD-100. ANSI Y14.5-94 AND AWS 2.4-86 APPLY.
2. MATERIAL: 304 STAINLESS STEEL 10 GAGE, ROUND TUBING PER ASTM A554-94 OR ASTM A269-02a. ELECTRIC RESISTANCE WELDED. FSC 4710. PLANISH TO FLATTEN WELD BEAD.
3. RADIOGRAPHIC INSPECTION OF SEAM WELD WILL BE IN ACCORDANCE WITH ASTM E390-95 GRADE 2 AND ASTM E1742.
4. REMOVE BURRS AND BREAK SHARP EDGES .016 INCHES.
5. TOLERANCE ON MATERIAL THICKNESS WILL DEPEND ON VENDOR SPECIFICATIONS FOR STEEL SHEET USED IN FABRICATING TUBE.
6. STAMP A 1/4 OR 1/2 INCH HIGH SERIAL NUMBER ONTO EACH TUBE USING BLACK INK. STARTING WITH NUMBER 001 ON THE FIRST TUBE THROUGH THE NUMBER OF THE LAST TUBE PRODUCED FOR THAT ORDER. FIRST ARTICLE TEST ITEMS SHOULD BE SERIALIZED SEPARATELY IN THE FORMAT FAT1, FAT2, ETC.

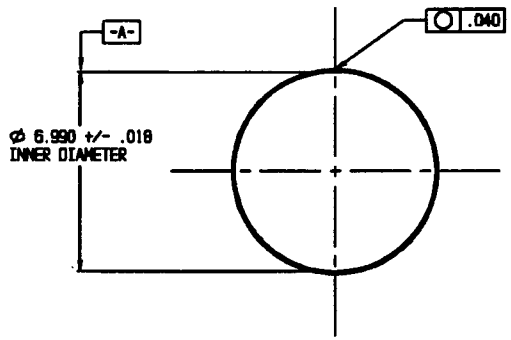

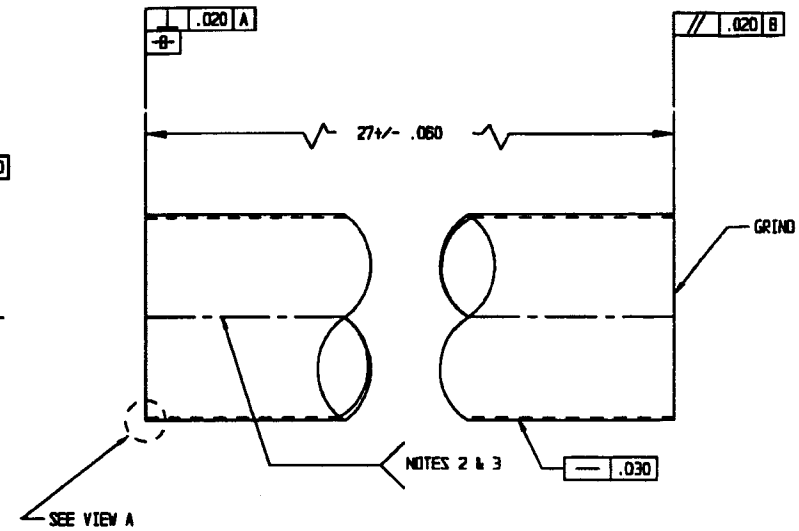

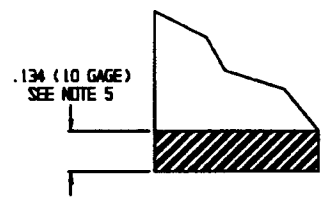

VIEW A

DRAFT

DISTRIBUTION STATEMENT A.

APPROVED FOR PUBLIC RELEASE;
DISTRIBUTION IS UNLIMITED.

NEXT ASSY	USED ON	APPLICATION	
04-XX-XX			
NLB	BONAVITO		
DESIGN ACTIVITY: U.S. ARMY RESEARCH DEVELOPMENT AND ENGINEERING COMMAND NATICK CHEMICAL BIOLOGICAL CENTER			
TUBE BODY FOR 7X27 MULTIPLE ROUND CONTAINER			
SIZE B	CAGE CODE 81361	M727004	
SCALE NONE	UNIT WT	SHEET 1 OF 1	