DRAWING SIZE B

NOTES:
1. BRASS, COPPER ALLOY UNS NO. C26000, ANNEALED, ASTM B 36 (.010 THICK).
2. 63 ✓ ALL OVER.

REVISIONS			
SYM	DESCRIPTION	DATE	APPROVAL
—	PRODUCT BASELINE ERR M2J2050	921229	RR
A	NOR M3J2009/930413	930518	
B	NOR M3J2016/930514	930824	

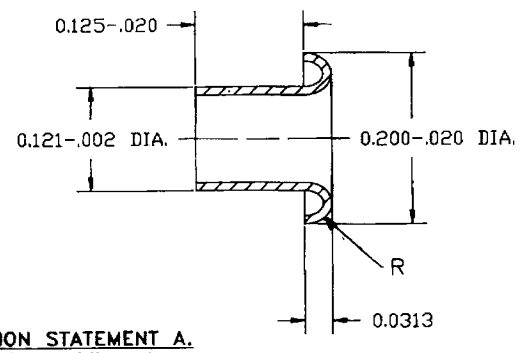

NEXT ASSY	USED ON
12960764	M880
12960767	M840
12912960	M984
12960765	M983
12960766	M720
12912958	M877
12912954	M853
12912955	M819
12912961	M888
12913063	M722
12913064	M721

APPLICATION

DISTRIBUTION STATEMENT A.
Approved for public release, distribution is unlimited.

PART NO. 12960751

MECHANICAL PROPERTIES	
YP	
TS	
EL2	
RA	
BH	
RH	

DO NOT SCALE DRAWING
UNLESS OTHERWISE SPECIFIED DIMENSIONS ARE IN INCHES
TOLERANCES ON DECIMALS ±
FRACTIONS ± ANGLES ±
THIRD ANGLE PROJECTION

ORIGINAL DATE OF DRAWING 921006

DRAFTSMAN	CHECKER
AET	GME
ENGR RW	ENGR
ENGR	ENGR

U.S. ARMY
ARMAMENT RESEARCH, DEVELOPMENT AND ENGINEERING CENTER
PICATINNY ARSENAL, NEW JERSEY 07806-5000

EYELET

SIZE	CAGE CODE	
B	19200	12960751
SCALE NONE	UNIT WT.	SHEET

SMCAR FORM 66, 1 JUL 87(TEMP) REPLACES SMCAR FORM 66, 1 JUN 86(TEMP) WHICH IS OBSOLETE

DRAWING SIZE F

REVISIONS				
ZONE	LTR	DESCRIPTION	DATE (YR MO DA)	APPROVED
	—	PRODUCT BASELINE ERR M2J2055	930225	[illegible]

NOTES:

1- APPLICABLE STANDARDS/ SPECIFICATIONS.
   A. DOD-STD-00100D(AR)
   B. ANSI Y14.5M-1982.

2- MATERIAL:
   POLY (VINYL CHLORIDE-VINYL ACETATE),
   SHEETING (SHEETS) OR STRIP, RIGID, .010± 10% THICKNESS,
   COMPOSITION B, TYPE I, CLASS 2, MATTE FINISH, L-P-535.

③- PRINT INDEX LINE WITH INK, MARKING, EPOXY BASE, BLACK NO. 37038 OF FED-STD-595, MIL-I-43553. FOR MASTER DRAWING OF INDEX LINE, SEE SHEET 2.

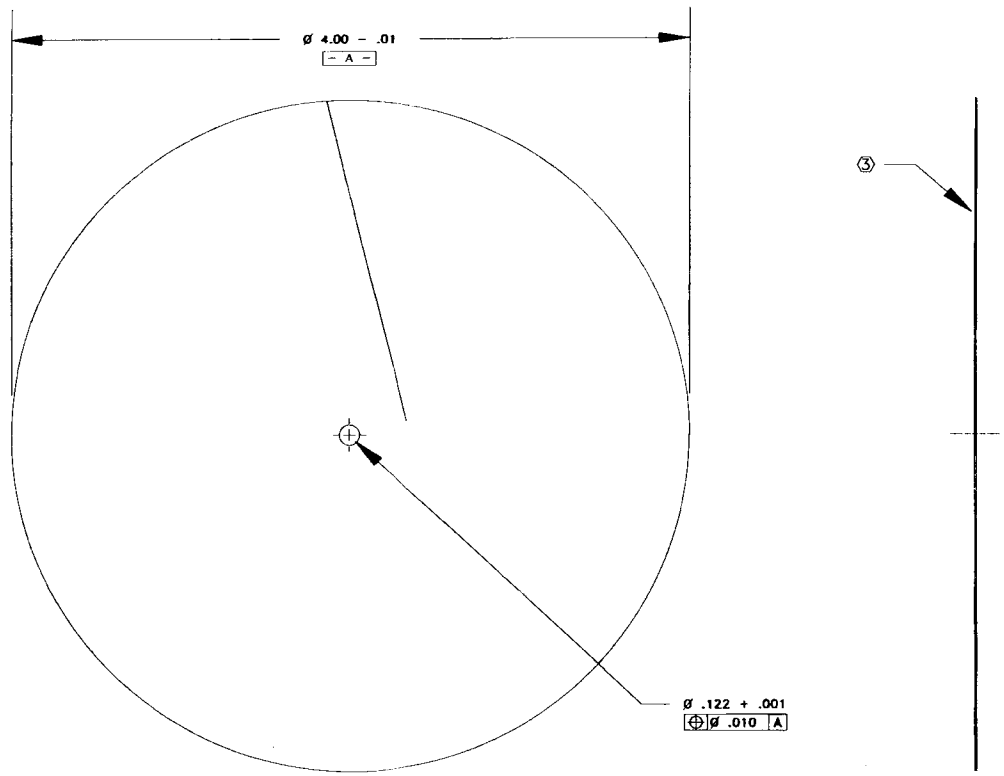

REV	
SH1	SH2
—	—

PART NO. 12960757

DISTRIBUTION STATEMENT A.
Approved for public release, distribution is unlimited.

PMC			
MECHANICAL PROPERTIES		12960764	M880
		12912960	M984
		12960765	M983
		12912958	M879
		12912954	M853
		12912955	M819
		NEXT ASSY	USED ON
		APPLICATION	

DO NOT SCALE DRAWING
UNLESS OTHERWISE SPECIFIED DIMENSIONS ARE IN INCHES
TOLERANCES ON
DECIMAL FRACTION
2 PL ± ±
3 PL ± ±
THIRD ANGLE PROJECTION
DATE CODE

CONTRACT NUMBER
CONTRACTOR
DRAWN BY AST DATE(YR-MO-DA) 92 11 02
CHECKED GMR CHECKED RW
DESIGN APPROVAL
DESIGN ACTIVITY U.S. ARMY ARMAMENT RESEARCH, DEVELOPMENT AND ENGINEERING CENTER PICATINNY ARSENAL, NEW JERSEY 07806-5000

DISC, CURSOR FOR 81MM M252 MORTAR AMMUNITION

SIZE F CAGE CODE 19200 12960757
SCALE 4/1 SHEET 1 of 2

SMCAR FORM 69, 1 DEC 87(TEMP) REPLACES SMCAR FORM 69, 1 JUL 87(TEMP) WHICH MAY BE USED UNTIL EXHAUSTED

DRAWING SIZE F

ZONE	LTR	DESCRIPTION	DATE (YR-MO-DA)	APPROVED
	—	PRODUCT BASELINE ERR M2J2055	930225	

NOTES:

THIS PRINT IS NOT TO BE USED FOR MANUFACTURE. A STABLE MASTER OF THIS DRAWING WILL BE FURNISHED TO THE CONTRACTOR BY THE CONTRACTING OFFICER UPON REQUEST.

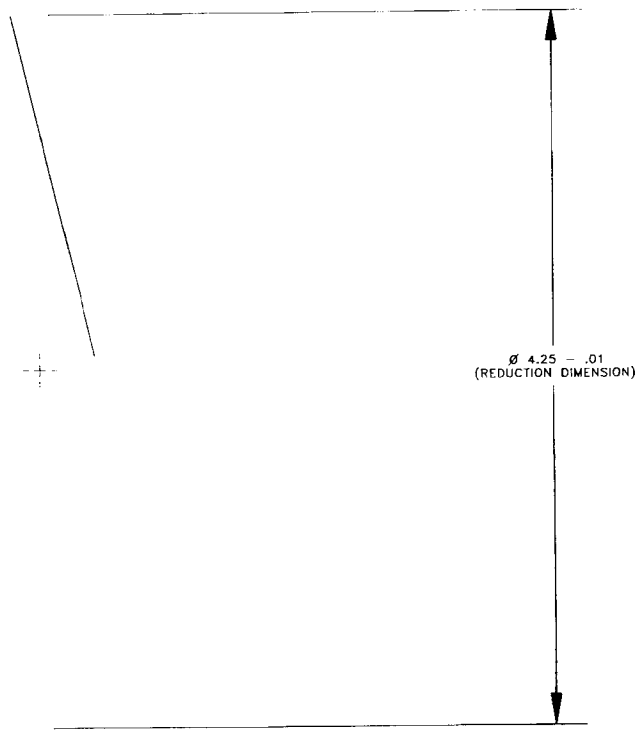

PART NO. 12960757

DISTRIBUTION STATEMENT A.
Approved for public release, distribution is unlimited.

PMC		
MECHANICAL PROPERTIES	12960764	M860
	12912960	M984
	12960763	M983
TP	12912958	M879
TS	12912954	M853
RA	12912955	M819
BH	NEXT ASSY	USED ON
RH	APPLICATION	

DO NOT SCALE DRAWING

UNLESS OTHERWISE SPECIFIED DIMENSIONS ARE IN INCHES
TOLERANCES ON
DECIMAL FRACTION
2 PL ±
3 PL ±

THIRD ANGLE PROJECTION

CONTRACT NUMBER

CONTRACTOR

DRAWN BY PET

DATE (YR-MO-DA) 92H02

CHECKED GME

ENGINEER RW

DESIGN APPROVAL

DESIGN ACTIVITY U.S. ARMY ARMAMENT RESEARCH, DEVELOPMENT AND ENGINEERING CENTER FRANKLIN ARSENAL, NEW JERSEY 07000-5000

DISC, CURSOR FOR 81MM M252 MORTAR AMMUNITION

SIZE F | CAGE CODE 19200 | 12960757

SCALE 4/1 | DWG NO. | SHEET 2

SMCAR FORM 69, 1 DEC 87(TEMP) REPLACES SMCAR FORM 69, 1 JUL 87(TEMP) WHICH MAY BE USED UNTIL EXHAUSTED