DATA ITEM DESCRIPTION

Title: Transportability Report

Number: DI-PACK-80880B
AMSC Number: A7357
DTIC Applicable: No
Office of Primary Responsibility: MT
Applicable Forms:

Approval: 20 Oct 1999
Limitation:
GIDEP Applicable: No

Use/Relationship: The Transportability Report will be used to obtain essential information from contractors for evaluating the transportation limitations and restrictions of developmental Department of Defense equipment that qualifies as a transportability problem item.

a. Information acquired through this report will include dimensional and weight characteristics of the developmental item or system, test results of physical transportability testing performed on the equipment, computer aided design models of the equipment to support structural, kinematic, and dynamic analyses of the transportation environment, and results of any CAD structural, kinematic, or dynamic analyses performed by the contractor.

b. This Data Item Description (DID) contains the format, content and intended use information for the data product resulting from the work task described by 4.5 of MIL-STD-1366D and is applicable to acquisition of military systems and equipment that qualify as a transportability problem item. This DID can be tailored to program requirements with approval of the service transportability agent.

c. During acquisition programs this DID should be applied at least 90 days prior to a major milestone decision review.

d. This DID supersedes DI-PACK-80880A.

Requirements:

1. Reference documents. The applicable issue of documents cited herein, including their approval dates and dates of any applicable amendments, notices, and revisions, shall be cited in the current issue of the DODISS at the time of the solicitation.

2. Format. The Transportability Report shall be in the contractor's format.

3. Content. The Transportability Report shall include the following:

(1) Title. TRANSPORTABILITY REPORT.

(2) Contractor name and location.

(3) Date of Transportability report.

(4) Official nomenclature.

(5) National stock number (if assigned).

(6) Line Item Number (if assigned).

(7) Brief description.

(a) Intended use.

(b) List whether commercial, modified commercial, non-developmental, developmental, reprocurement, or modified equipment.

(c) Specify type of military units that will use or transport the item.

(d) State whether for worldwide use or for specific theater of operations. List specific theater of operations in priority order.

(e) Planned quantity. State item acquisition quantity by fiscal year.

(8) Transportation Data.

(a) Hazardous materials. For each item classified as hazardous material, state:

1. The class of hazardous material as specified in: *Title 49, Code of Federal Regulations* (49 CFR), Parts 100-179, *Transportation;* **AFJMAN 240-204**, *Preparing Hazardous Materials for Military Air Shipments;* International Maritime Organization (IMO), *International Maritime Dangerous Good (IMDG) Code*; or the United Nation's *Recommendation on the Transportation of Dangerous Goods.*

2. DOT proper shipping name.

3. Net explosive weight (DOT class A or B explosives only).

4. Venting requirements.

5. Grounding requirements.

6. Any other than above.

(b) Sectionalization. State if the item can be sectionalized, folded, or reduced for transport. All data specified in this report that are required for the operational problem item are required for each component(s) or subassembly that exceeds the criteria outlined in paragraph 4.4 of **MIL-STD-1366** (see chapter 3 of this Pamphlet). Provide the

additional information in paragraphs (b)1-(b)2 for all components or subassemblies that meet the criteria of a transportability problem item. Provide the length, width, height and weight of each sectionalized component that does NOT meet the criteria for a transportability problem item.

1. Time and personnel required to disassemble at departure site and reassemble at destination (Time: in work and clock hours).

2. Special equipment or tools required for sectionalization (for example, cranes, forklifts, wrecker trucks, pallets, nitrogen, hand tools, calibration equipment, or fixtures).

(c) Modeling and simulation (when required). Provide computer aided design (CAD) models of the equipment to support structural, kinematic, and dynamic analyses of the transportation environment, or provide results of CAD transportation analyses performed by the contractor. See **MIL-STD-209** and **MIL-STD-1366** for modeling and simulation requirements.

(d) Transportability tests. A copy of test report(s) (or test plan and scheduled date(s) if not completed) shall be included as a part of this report, when available.

(e) Speed requirements. State self-propelled or towed speed limits.

(f) Shipping data. A paper copy of shipping data plate that will be secured to the vehicle shall be included with this report, when available (see **MIL-STD-209**).

(g) Transport configuration for wheeled vehicles, tracked vehicles and skid-mounted equipment. Two sets of data are required: one for the fully operational configuration (including gross weight, fuel, lubricants, water, and so forth), and one for the shipping (reduced or sectionalized) configuration.

1. Drawings (required if CAD models are not provided (see (c))). Indicate top, plan, side, and end view configurations on a **MIL-DTL-31000** or similar engineering drawing(s). Hardcopy or electronic files are acceptable. Drawings must include all data as shown in figure 1, 2, or 3 (length, width, height, and location of Center of Gravity (CG)) on all three views).

2. Weight. State curb weight and maximum gross weight, and any other intermediate weights for special configurations required to meet specific transport requirements (i.e. fixed-wing air transport or helicopter transport).

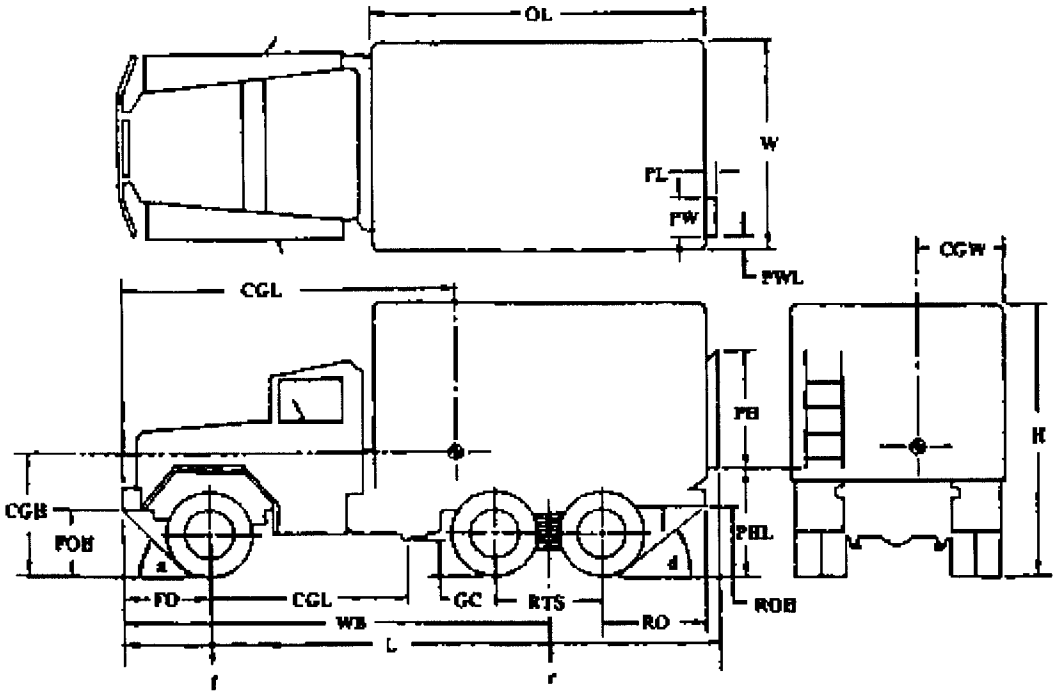

OL - Overall Length Body
PW - Projection Width
PH - Projection Height
PL - Projection Length
L - Overall Length
CGW - Center of Gravity Width
WB - Wheel Base
FOH - Front Overhang Height
ROH - Rear Overhang Height
GCL - Ground Clearance Location
a - Angle of Approach
F - Front Axle Load

W - Overall Width
PWL - Projection Width Location
PHL - Projection Height Location
H - Overall Height
CGL - Center of Gravity Length
CGH - Center of Gravity Height
FO - Front Overhang
RO - Rear Overhang
GC - Ground Clearance
RTS - Rear Tire Separation
b - Angle of Departure
r - Rear Axle Load

Figure 1 - Wheeled Vehicle Dimensions

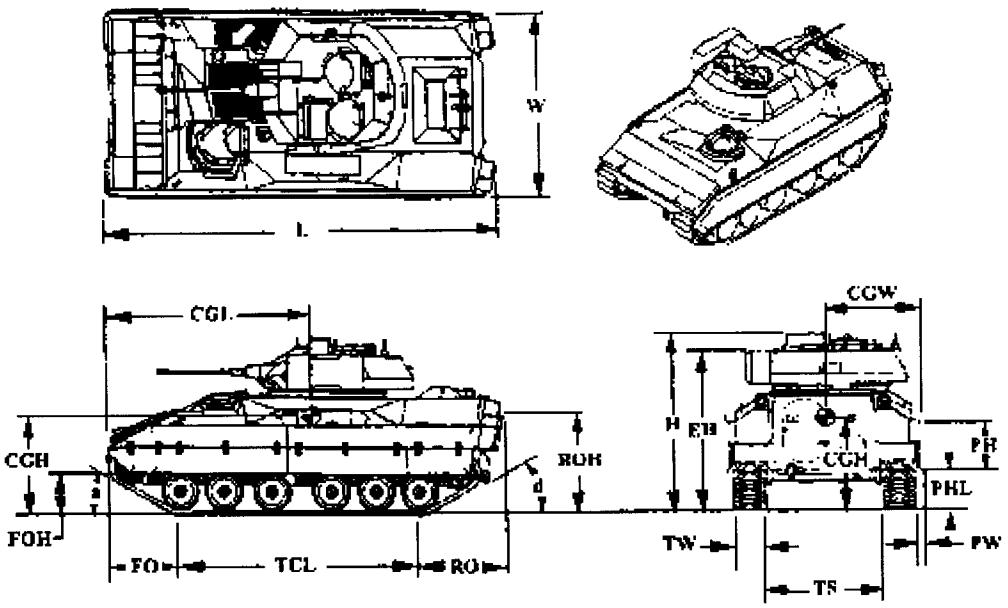

H - Overall Height
L - Overall Length
CGW - Center of Gravity Width
TCL - Track Center Line
RO - Rear Overhang
ROH - Rear Overhang Height
PH - Projection Height
PHL - Projection Height Location
EH - Edge Height
D - Angle of Departure

W - Overall Width
CGL - Center of Gravity Length
CGH - Center of Gravity Height
FO - Front Overhang
FOH - Front Overhang Height
TW - Track Width
PW - Projection Width
TS - Track Separation
a - Angle of Approach

Figure 2 - Tracked Vehicle Dimensions

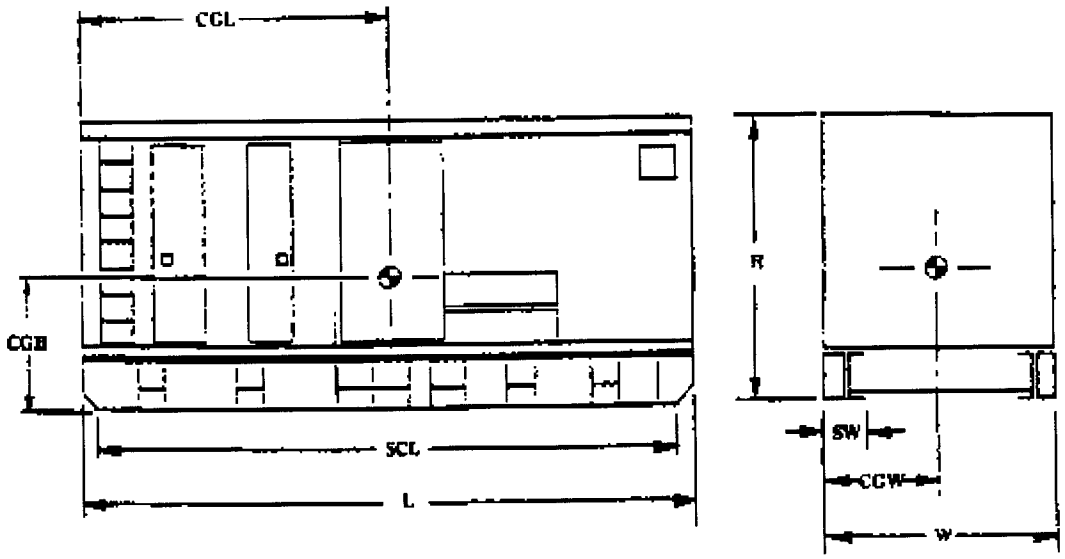

SCL - Skid Chamber Length
L - Overall Length
H- Overall Height
CGW - Center of Gravity Width
SW - Skid Width
W - Overall Width
CGL - Center of Gravity Length
CGH - Center of Gravity Height

Figure 3 - Skid-Mounted Item Dimensions

3. Lifting and tiedown provisions. State the number, location and strength (yield and ultimate) of lifting (including aerial recovery) and tiedown provisions for the item and major components removed for transport. Identify the location of hardpoint lifting provisions provided for aerial recovery (if required). State if the lifting provisions meet criteria of **MIL-STD-209** and interface with all standard aerial recovery and sling components. Dimensional location of lifting and tiedown provisions (with respect to the CG) shall be shown in each view required in figure 1, 2 or 3.

4. Projections. State the dimensions and locations of any significant projections (for example, environmental control units, ladders, antennas, shelters, and so forth).

(h) Additional information required for **wheeled** vehicles.

1. Weight ratings. Specify the gross vehicle weight rating (GVWR).

2. Tires. State the number, size(s), number of plies, load rating(s), locations, and inflation pressure of tires.

3. Axle loads. State the axle loads for each axle for the following:

a. Empty vehicle.

b. Loaded vehicle.

4. State axle ratings for each axle.

5. Suspension ratings. State load ratings for each suspension.

6. Crest Angle. State the angle (in degrees) connecting two horizontal surfaces that the vehicle can pass (crest) without interference (fig 4).

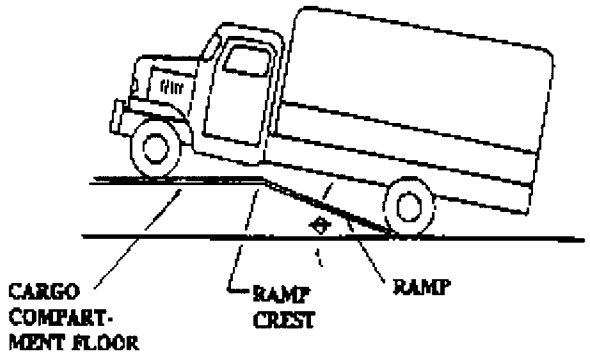

Figure 4 - Ramp Crest Angle

7. Tire footprint area. State the locations and dimensions of all tire footprint areas actually in contact with the ground in the fully loaded condition (fig 5).

8. Axle tracking width. State the tracking width of each axle (fig 6).

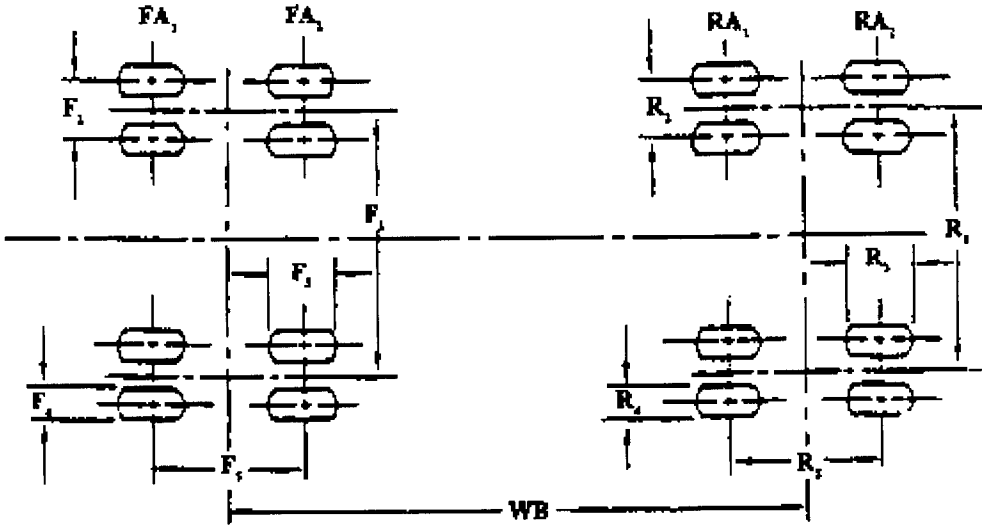

FA - Front Axle
RA - Rear Axle
WB - Wheel Base

Figure 5 - Tire Footprint Locations and Dimensions

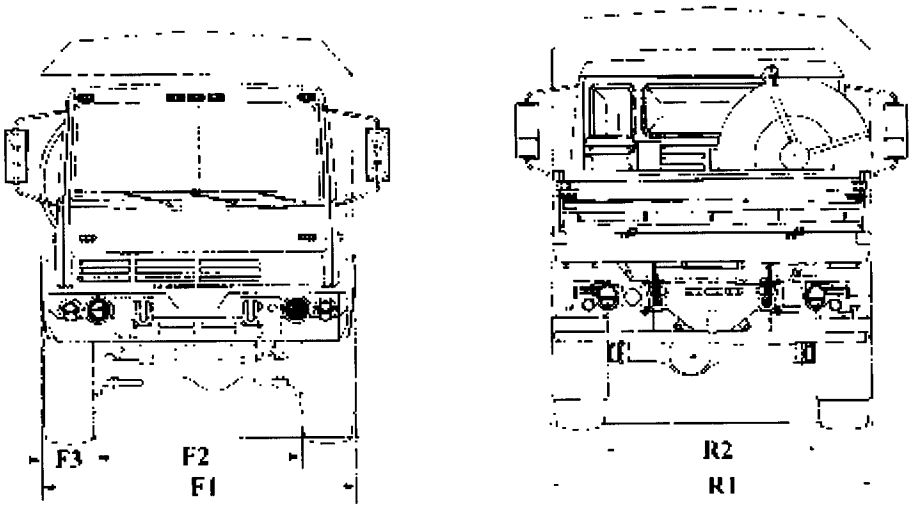

F1 - Outside Distance
F3 - Tire Width
R2 - Inside Distance
F2 - Inside Distance
R1 - Outside Width

Figure 6 - Tracking Width

9. Vehicle turning diameter. State the vehicle turning diameter for the following:

a. Wall-to-wall.

b. Curb-to-curb.

(i) Additional information required for **tracked** vehicles.

1. Track pads. State the area and number of track shoe pads actually in contact with the ground (fig 7).

2. Ground Pressure. Specify the ground pressure created by the heaviest pad (pounds per square inch). State the weight supported by each road wheel.

(j) Additional information required for **skid-mounted** equipment.

1. Skids. Information on skids shall include the following:

a Number of skids.

b. Dimensions of all skid areas actually in contact with the ground.

(k) Subsystems or Modifications. For subsystems, support equipment, and modifications identified in paragraph (7)(b) above, this report shall contain all information pertaining to the applicable subsystem and identification of the primary system(s) affected.

(l) Identification. Include the name, title, organization, or department of individual preparing the report and the date of preparation.

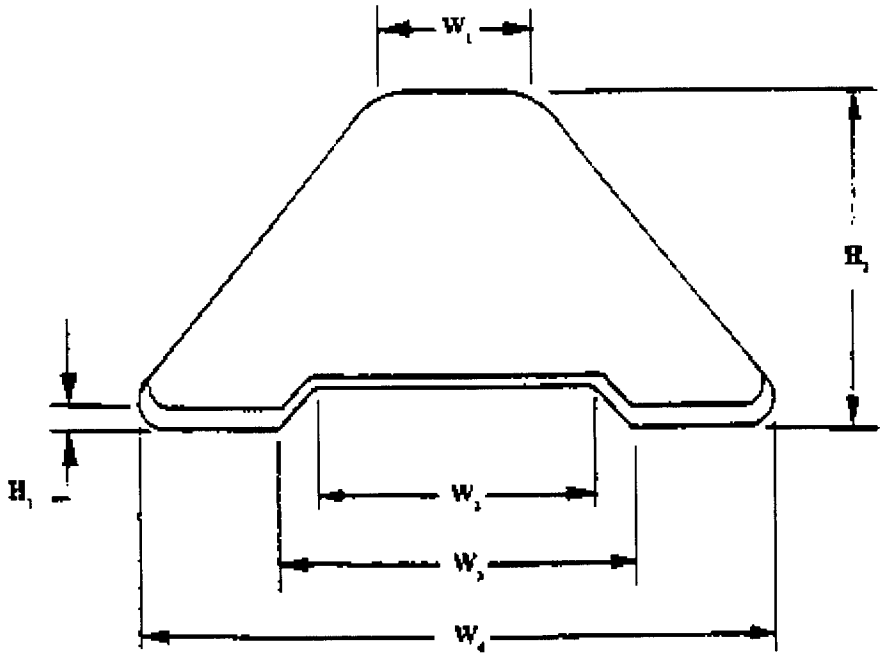

Figure 7 - Track Shoe Pad Dimensions (footprint data)

4. End of DI-PACK-80880B.