D12591519

REVISIONS			
ZONE	LTR	DESCRIPTION	DATE (YR-MO-DA)	APPROVED
	—	PRODUCT BASELINE ERR GOA1022	91-01-28	
	A	SEE GSA1012	93-08-12	Cwk

NOTES:

1. MATERIAL: .12-.46C AISI PLAIN CARBON (10XX ONLY) STEEL, NORMALIZED OR ANNEALED. (A)
2. UNLESS OTHERWISE SPECIFIED, ALL EDGES AND CORNERS SHALL BE BROKEN .02 MAX.
3. FINISH 125 ALL OVER.
4. PROTECTIVE FINISH: FINISH PER DWG A7309999.
5. DIMENSIONAL LIMITS AND SURFACE TEXTURE APPLY WITHOUT PROTECTIVE FINISH.

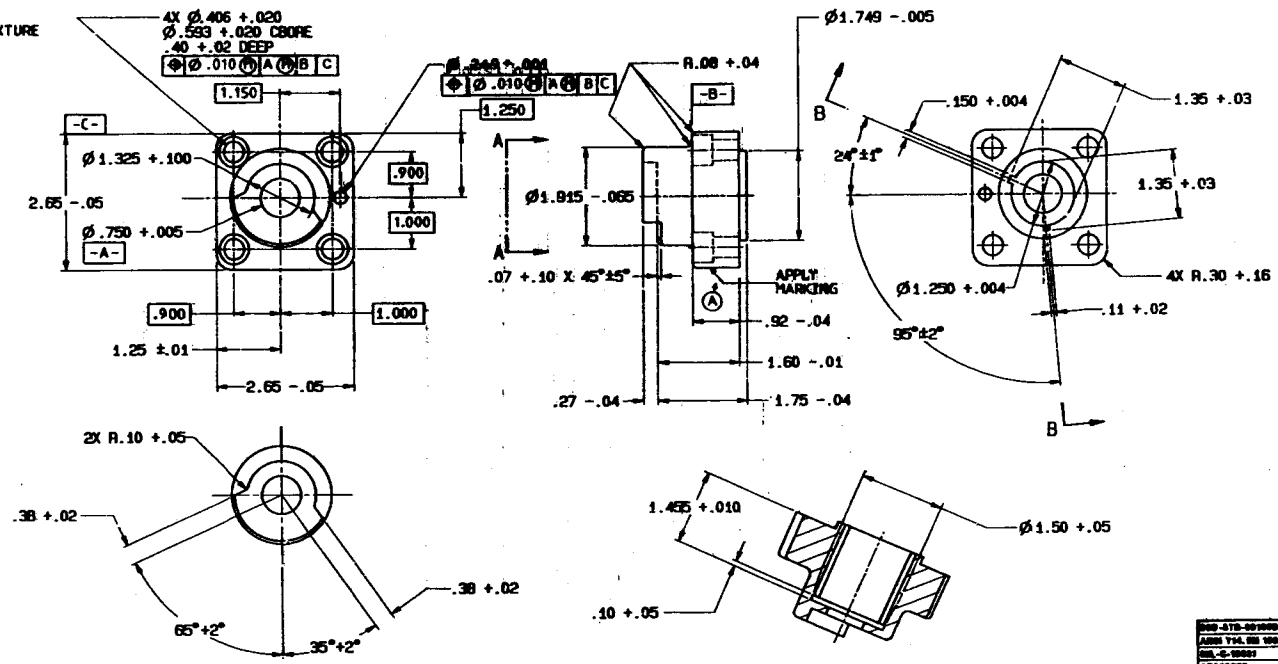

VIEW A-A

SECTION B-B

MARKING REQUIREMENTS PER MIL-C-15001
DO NOT APPLY MARKING
DO APPLY: 12591519 INFO -
METHOD: METAL STAMP
DEPTH OF ETCH: .04 TO .12

DISTRIBUTION STATEMENT B.
DISTRIBUTION AUTHORIZED TO U.S. GOVERNMENT AGENCIES ONLY (IN ACCORDANCE WITH THE TERMS OF THE US-UK LICENSE AGREEMENT) (05-AA-25). OTHER REQUESTS FOR THIS DOCUMENT SHALL BE REFERRED TO COMMANDER, ARDEC, ATTN: SMCAR-FSS-DA, PICATINNY ARSENAL, NJ 07806-5000.
WARNING-
THIS DOCUMENT CONTAINS TECHNICAL DATA WHOSE EXPORT IS RESTRICTED BY THE ARMS EXPORT CONTROL ACT (TITLE 22, U.S.C. SEC. 2751 ET SEQ.) OR EXECUTIVE ORDER 12470. VIOLATIONS OF THESE EXPORT LAWS ARE SUBJECT TO SEVERE CRIMINAL PENALTIES.
DESTRUCTION NOTICE-
FOR CLASSIFIED DOCUMENTS, FOLLOW THE PROCEDURES IN DoD 5200.22-M, INDUSTRIAL SECURITY MANUAL, SECTION II-19 OR DoD 5200.1-R, INFORMATION SECURITY PROGRAM REGULATION, CHAPTER IX. FOR UNCLASSIFIED, LIMITED DOCUMENTS, DESTROY BY ANY METHOD THAT WILL PREVENT DISCLOSURE OF CONTENTS OR RECONSTRUCTION OF DOCUMENT.

MECHANICAL PROPERTIES			
SIZE	A		
12591340	CANNON 105MM HOWI M20		
NEXT ASSY	USED ON		
APPLICATION			

UNLESS OTHERWISE SPECIFIED DIMENSIONS ARE IN INCHES
TOLERANCES ON
2 PLACE ± 3 PLACE ±
2 PLACE ± 3 PLACE ±

CONTRACT NUMBER DAAA09-87-C1205
CONTRACTOR BOMAR INTERCONNECT
DRAWN BY J.B. DATE 87-11-06
CHECKED BY T.B.S. MANAGER R.C.
MANAGER APPROVAL S. W. Hall
DESIGN APPROVAL Kevin M. Tobey

DESIGN ACTIVITY U.S. ARMY ARMament RESEARCH, DEVELOPMENT AND ENGINEERING CENTER DOVER, NEW JERSEY 07801-5001

HOUSING, RECOCK MECHANISM

SIZE B | CODE IDENT 19206 | 12591519
SCALE 1/1 | SHEET WT. | SHEET

DOD-STD-100/008(AR)
ASME Y14.5M 1982
MIL-C-15001
A7309999
FORMAT A
AFSC SUMMARY(DRF)

H11SNN35057 ISS 1