WARNING

THIS CONTRACT INVOLVES HAZARDOUS MATERIAL

SEE SEPARATE HAZARDOUS COMPONENT SAFETY DATA STATEMENTS FOR TECHNICAL DATA AND SAFETY REQUIREMENTS

(TITLE OF END ITEM AND IFB, RFQ, RFP'S, ETC. OR CONTRACT NUMBER)

FIRMS MUST HAVE ADEQUATE FACILITIES FOR HANDLING AMMUNITION, EXPLOSIVES,

or other unique military related dangerous material involved that could adversely affect personnel and property in the event of explosion, fire or exposure. Prior to contract award, the Government will thoroughly investigate the ability of prospective contractor to comply with safety requirements.

☆ U.S. GOVERNMENT PRINTING OFFICE: 742-1757 60019

M230 30MM GUN AND APACHE AREA WEAPONS SYSTEM PRICE LIST
PERIOD OF PERFORMANCE - DATE OF AWARD THROUGH 31 JANUARY 02

REF #	Make/Buy	NIIN	NSN	DESCRIPTION	P/N	TTL Mos ARO	TTL Qty Per Mo.	1-3	4-10	11-25	26-50	51-100	101-200	201-500
1	buy	01-181-9097	3040-01-181-9097	Shaft, Shoulder	7-317221123	8	25	250.28	108.16	77.85	67.61	34.37	22.18	
2	buy	01-182-0850	3130-01-182-0850	Housing & Liner Assy	7-217221452	16	10	9408.00	8640.00	7968.00	7884.80	7744.00	7648.00	
3	make	01-182-0989	4710-01-182-0989	Tube Assy, Metal	7-217221409-601	14	50	1918.50	1918.50	1453.03	1431.21	1419.58	1409.39	
4	make	01-182-1000	1005-01-182-1000	Chute Assy, Twist	7-217236102	11	10	1726.73	1611.29	1527.61	1427.90	1371.82	1369.28	
5	make	01-182-1001	1005-01-182-1001	Chute Assy, Forward	7-317236103	14	10	4954.20	4053.12	3959.08	3747.18	3329.12	3192.05	
6	buy	01-182-1011	1005-01-182-1011	Chute	7-317236270	9	30	497.92	497.92	497.92	497.92	497.92	497.92	
7	make	01-182-1031	1005-01-182-1031	Support Assy, Tr	7-317236204	24	10	1529.67	1486.39	1455.00	1266.09	1177.73	1169.78	
8	make	01-182-1032	1005-01-182-1032	Chute Assy Roll	7-317236203	16	10	5544.74	4212.54	3656.21	3453.41	3320.71	3214.77	
9	make	01-182-3710	3040-01-182-3710	Housing Mechan	7-317221300-3	13	10	2321.69	2144.44	2088.07	1720.45	1552.72	1443.74	
10	make	01-182-3716	1005-01-182-3716	Fork, Cradle Sup	7-317221100	14	10	6300.75	6280.17	5976.33	6002.87	5883.66	5824.45	
11	make	01-182-3746	5340-01-182-3746	Clevis, Rod End	7-317236410	12	10	514.06	500.53	457.30	286.67	241.21	215.58	
12	make	01-182-4040	1005-01-182-4040	Shaft Assy, Feed	387-3475	10	25	368.76	368.76	368.76	312.58	299.62	292.42	
13	buy	01-182-4084	6105-01-182-4084	Motor, Alternating	7-317213000	14	20	4531.49	4027.15	3648.00	3434.00	3220.98	3017.42	
14	buy	01-182-4114	3020-01-182-4114	Sprocket Wheel	387-3492	10	25	115.24	115.24	115.24	115.24	100.84	86.44	
15	buy	01-182-4141	5310-01-182-4141	Nut, Self-Lock	387-3488	9	100	108.04	108.04	108.04	79.23	64.83	43.21	
16	buy	01-182-4171	3120-01-182-4171	Bearing, Sleeve	387-3491	8	100	28.81	28.81	28.81	23.05	17.29	17.29	
17	buy	01-182-4364	5340-01-182-4364	Pad Cushioning	7-217221364	12	20	24.83	24.83	24.83	17.32	13.58	11.66	
18	buy	01-182-7529	5360-01-182-7529	Spring Helical	387-3416	10	100	440.27	111.14	41.87	18.76	11.48	6.21	
19	buy	01-182-7532	3020-01-182-7532	Sprocket Wheel	387-3737	10	100	47.19	47.19	47.19	37.95	37.95	23.82	22.35
20	buy	01-182-7533	3020-01-182-7533	Sprocket Wheel	387-3735	11	40	204.25	204.25	204.25	111.26	86.82	74.18	
21	buy	01-182-7549	3020-01-182-7549	Gear Bevel	387-3806	12	25	1288.28	644.12	382.91	263.04	213.53	200.88	
22	buy	01-182-7561	3120-01-182-7561	Bearing, Sleeve	387-3424	9	50	36.01	36.01	36.01	28.81	21.62	18.71	
23	buy	01-182-7564	3120-01-182-7564	Bearing, Sleeve	387-3468	9	50	36.01	36.01	36.01	21.62	20.16	18.71	
24	buy	01-184-1693	1005-01-184-1693	Collar, Elbow	7-217236105	11	40	378.74	336.58	307.93	287.00	269.21	252.19	
25	buy	01-187-3598	1005-01-187-3598	Collar Inb Elbow	7-317236214	12	40	320.00	153.60	120.32	113.92	99.84	93.44	
26	buy	01-188-2979	3040-01-188-2979	Cam Control	387-3453	15	40	1490.97	1490.97	1461.88	1432.78	1432.78	1432.78	
27	buy	01-206-0900	3020-01-206-0900	Gear Spur	7-317221353	10	25	100.77	100.77	100.77	49.89	33.69	23.54	
28	make	01-206-6290	1005-01-206-6290	Stow Assy	7-217221500-601	12	10	5668.83	2895.62	2239.23	1946.76	1814.32	1713.58	
29	make	01-206-6297	3040-01-206-6297	Housing Mechan	7-317221435	16	10	10438.00	10409.20	10379.25	10191.40	10170.35	10036.45	
30	buy	01-211-3664	5340-01-211-3664	Panel Blank	7-217222594-3	16	50	1099.30	976.96	893.80	833.06	781.39	732.01	
31	buy	01-211-3721	5935-01-211-3721	Bracket, Electrical	7-217231799	12	50	65.04	57.79	52.88	49.28	46.22	43.30	
32	buy	01-211-3779	5998-01-211-3779	Printed Wiring Board	7-317231766									
33	make	01-211-4160	1005-01-211-4160	Chute	7-317236403	18	10	2199.55	1862.98	1516.76	1401.92	1343.78	1297.51	
34	buy	01-211-5609	5998-01-211-5609	Circuit Card Assy	7-217231730-601									

Use or disclosure of data contained on this sheet is subject to the restriction on the Title Page of this Proposal.

M230 30MM GUN AND APACHE AREA WEAPONS SYSTEM PRICE LIST
PERIOD OF PERFORMANCE - DATE OF AWARD THROUGH 31 JANUARY 02

REF #	Make/Buy	NIIN	NSN	DESCRIPTION	P/N	TTL Mos ARO	TTL Qty Per Mo.	1-3	4-10	11-25	26-50	51-100	101-200	201-500
35	buy	01-211-5614	3040-01-211-5614	Shaft Shouldered	387-3550	12	40	1255.14	1115.46	1020.51	951.16	675.96	633.23	
36	buy	01-211-6018	5998-01-211-6018	Circuit Card Assy	7-317222545									
37	buy	01-211-6308	5998-01-211-6308	Circuit Card Assy	7-217231760-603	16	50	1801.88	1601.34	1465.04	1365.48	1280.78	1199.83	
38	buy	01-212-3115	5340-01-212-3115	Bracket, Dble Angle	7-217231765	12	50	99.10	88.06	80.58	75.10	70.44	65.98	
39	buy	01-212-3117	5998-01-212-3117	Circuit Card Assy	7-217231770-601									
40	buy	01-214-8703	5340-01-214-8703	Cover, Access	7-217231775-3	16	25	1260.80	348.16	185.60	102.40	58.88	39.68	
41	buy	01-215-6164	1560-01-215-6164	Cover Access	387-3310-3	15	40	240.01	240.01	240.01	234.20	224.01	214.55	
42	make	01-215-6184	3110-01-215-6184	Plate Retaining	387-3450-601	15	50	785.90	785.90	600.95	443.96	394.95	384.87	
43	make	01-215-6187	3020-01-215-6187	Gear Cluster	387-3410-603	11	25	474.64	474.64	474.64	323.69	274.35	237.84	
44	buy	01-215-6204	1005-01-215-6204	Adapter, Ammu	387-3745	16	25	1818.27	1818.27	1818.27	1760.08	1659.53	1636.43	
45	buy	01-215-8183	1005-01-215-8183	Carrier Bolt	387-3242-3	15	20	2065.55	2065.55	2043.71	2029.17	2000.09	1963.71	
46	make	01-215-8561	3040-01-215-8561	Worm Shaft	387-3465-3	10	25	668.31	668.31	668.31	447.38	392.02	352.39	
47	buy	01-219-7501	5315-01-219-7501	Pin Groove Hd	387-3247-5	10	100	975.31	368.40	242.96	199.91	135.05	118.55	
48	make	01-220-8521	1005-01-220-8521	Chute Assy Ammo	7-317236202-3	12	10	3095.52	2842.87	2649.29	2401.41	2279.02	2175.25	
49	make	01-221-0420	1005-01-221-0420	Feeder Ammo	7-317236300-3	17	10	6432.37	5460.44	4758.99	4361.15	3968.80	3654.40	
50	buy	01-221-0424	1005-01-221-0424	Chute, Side	7-317236600-25	12	20	1381.43	1227.67	1123.19	1046.85	981.91	919.86	
51	buy	01-221-0425	4925-01-221-0425	Feeder, Ammo	7-217232910-29	14	50	15977.05	3472.12	2705.96	2464.73	2359.09	2284.17	
52	buy	01-221-0428	1005-01-221-0428	Chute, Ammo	7-217232950-29	14	50	2877.30	2557.07	2339.42	2180.44	2045.18	1915.93	
53	make	01-221-0434	1005-01-221-0434	Retainer Assy A	7-317236845-3	10	20	116.95	116.95	116.95	98.77	90.99	84.74	
54	buy	01-221-0609	5990-01-221-0609	Resolver, Elec	7-217221350-3	18	40	2399.01	2132.01	1950.54	1817.98	1705.22	1597.44	
55	make	01-221-0624	1005-01-221-0624	Recoil Mech 30	387-3900-3	13	20	2041.17	2041.17	2023.70	1982.98	1953.88	1924.79	
56	buy	01-232-7836	3040-01-232-7836	Worm Shaft	7-363310002									
57	buy	01-234-6826	1005-01-234-6826	Counter Assy	7-217231706-603	15	10	41708.80	13011.20	11374.08	5004.80	4623.36	4055.04	
58	buy	01-237-9045	1005-01-237-9045	Control Display Assy	7-317310000-5									
59	buy	01-238-8187	1005-01-238-8187	Contact Box Assembly	387-3759-3	10	100	187.29	187.29	144.08	122.46	100.84	92.21	
60	buy	01-238-9867	1005-01-238-9867	Orifice Assy	387-3955-3	12	10	582.40	352.00	192.00	134.40	126.08	121.60	
61	buy	01-239-1613	5998-01-239-1613	Circuit Card Assy	7-217231740-601									
62	buy	01-239-2359	1005-01-239-2359	Controller External	7-317400210-11									
63	buy	01-239-4198	1005-01-239-4198	Track Assy Flex	7-317236287-3	11	20	662.40	662.40	662.40	662.40	662.40	662.40	
64	buy	01-239-4219	5340-01-239-4219	Clevis, Rod End	387-3440-3	11	25	224.74	224.74	224.74	224.74	187.29	165.67	
65	buy	01-239-4221	4810-01-239-4221	Valve Solenoid	7-217221625-7	12	20	2410.04	2141.80	1959.51	1826.34	1713.05	1604.79	
66	make	01-239-4230	5340-01-239-4230	Door Access	7-317236820-5	12	20	1211.52	900.08	783.43	631.12	568.57	519.01	
67	buy	01-246-1777	1005-01-246-1777	Cage Assy Elbow	7-317236417-15	11	25	232.74	232.74	222.55	212.38	189.11	171.64	
68	make	01-247-0491	1005-01-247-0491	Transfer Housing Assy	7-317236800-607	17	10	7677.46	7119.35	6931.92	6297.83	5989.00	5849.10	

Use or disclosure of data contained on this sheet is subject to the restriction on the Title Page of this Proposal.

M230 30MM GUN AND APACHE AREA WEAPONS SYSTEM PRICE LIST
PERIOD OF PERFORMANCE - DATE OF AWARD THROUGH 31 JANUARY 02

REF #	Make/Buy	NIIN	NSN	DESCRIPTION	P/N	TTL Mos ARO	TTL Qty Per Mo.	1-3	4-10	11-25	26-50	51-100	101-200	201-500
69	make	01-250-1311	5340-01-250-1311	Bracket, Double	7-311b25171-9	12	10							
70	buy	01-250-1455	5999-01-250-1455	Circuit Card Assy	7-217222515-605									
71	buy	01-255-4201	5999-01-255-4201	Shielding Gasket	7-217222100	11	100	344.95	306.55	280.46	261.40	245.18	229.70	
72	make	01-262-3558	6110-01-262-3558	Panel Power Distrib	7-317400121-3	14	10	2986.04	2275.32	2093.55	1976.26	1942.58	1910.72	
73	make	01-263-9563	1005-01-263-9563	Tensioner Assy	7-317236400-7	17	15	8798.49	7320.29	5951.36	5291.90	4799.56	4574.58	
74	buy	01-269-6574	5315-01-269-6574	Pin Straight Head	7-317236823-5	10	40	34.97	34.97	34.97	27.98	25.18	22.37	
75	buy	01-273-9338	5315-01-273-9338	Pin Straight Head	HS7013-50-14	8	1000	13.06	13.06	13.06	13.06	13.06	7.49	
76	buy	01-277-2564	5305-01-277-2564	Screw, External	7-317236846	9	50	34.96	34.96	34.96	34.96	26.57	23.78	
77	make	01-284-7569	1005-01-284-7569	Cradle Assy Gun	7-317226202-3	14	20	4307.80	4287.83	4193.27	3996.91	3877.64	3836.90	
78	make	01-285-0107	6150-01-285-0107	Wiring Harness	7-311b24654-005	17	10	1635.18	1416.66	1373.19	1295.77	1229.90	1166.95	
79	make	01-287-6356	6150-01-287-6356	Wiring Harness	7-311b24653-005	17	10	1739.73	1584.14	1478.15	1401.17	1335.47	1272.67	
80	buy	01-289-4647	1005-01-289-4647	Segment Upper For	7-317236260-3	12	20	96.55	85.80	78.50	73.16	68.62	64.28	
81	buy	01-289-4648	1005-01-289-4648	Segment Lower For	7-317236261-3	12	20	66.56	66.56	66.56	66.56	66.56	66.56	
82	make	01-289-9746	1005-01-289-9746	Elbow Assy For	7-317236239	24	20	2047.14	1972.85	1922.82	1725.51	1575.51	1553.22	
83	buy	01-289-9747	3020-01-289-9747	Gear set	7-317221482	17	20	7499.69	6664.99	6097.70	4241.52	4198.46	3933.12	
84	buy	01-290-6485	3020-01-290-6485	Gear Set, Worm	7-317221481	16	20	1941.25	1725.20	1578.36	1471.09	1379.84	1292.63	
85	make	01-291-9333	1005-01-291-9333	Cage Assy Elb	7-317236205	13	20	2056.21	1763.90	1638.06	1398.15	1277.06	1194.17	
86	buy	01-294-3352	5306-01-294-3352	Bolt, Shoulder	387-3345-5	9	100	158.46	158.46	158.46	144.08	100.84	86.44	
87	buy	01-294-6339	5306-01-294-6339	Bolt, Shear	hs4144-4hl14	16	10	55.03	55.03	55.03	55.03	32.79	32.79	
88	make	01-309-3892	1005-01-309-3892	Bar Auto Gun	387-3116	12	20	4652.58	4652.58	4652.58	4652.58	4652.58	4652.58	
89	buy	01-313-6838	3020-01-313-6838	Gear Spur	387-3530-3	11	40	171.57	171.57	171.57	87.81	61.76	44.61	
90	buy	01-323-5198	1005-01-323-5198	Chute, Ammo	7-317236700-49	12	20	3025.29	2611.84	2325.16	2055.76	1790.68	1586.12	
91	buy	01-324-6636	4730-01-324-6636	Coupling Assy	HS4883-5	10	40	284.54	252.88	231.35	215.63	202.25	189.48	
92	buy	01-325-3394	1005-01-325-3394	Chute, Ammo	7-317236286-11	11	10	5568.00	5568.00	5568.00	5568.00	5568.00	5568.00	
93	buy	01-326-1606	5998-01-326-1606	Circuit Card Assy	7-317231780-1	12	50	1778.24	1580.33	1445.81	1347.57	1263.97	1184.09	
94	buy	01-329-4861	1005-01-329-4861	Con Box Elect	7-217222500-611	12	30	21750.22	19329.46	17684.25	16482.46	15460.04	14482.98	
95	buy	01-329-4863	5998-01-329-4863	Circuit Card Assy	7-217222555-603									
96	buy	01-329-4864	5998-01-329-4864	Circuit Card Assy	7-217222525-603	12	50	1406.64	1250.09	1143.68	1065.96	999.83	937.93	
97	make	01-340-5942	3010-01-340-5942	Clutch Assy Fr	387-3499-1	9	25	1057.07	1055.72	994.32	646.24	538.67	457.35	
98	buy	01-341-6246	3020-01-341-6246	Gear Bevel	387-3805-1	9	25	1715.88	857.96	454.26	310.36	265.74	250.56	
99	make	01-342-0461	1005-01-342-0461	Elbow Assy Ammo	7-317236301-3	18	15	3459.00	3214.34	2768.03	2309.39	2114.56	1979.68	
100	buy	01-342-0462	1005-01-342-0462	Supp Guide Chain	387-3602-1	12	40	489.54	349.67	307.70	223.78	218.19	218.19	
101	buy	01-386-2769	1005-01-386-2769	Receiver Cart	387-3601-3	16	20	8232.70	7316.42	6693.70	6238.80	5851.80	5481.97	
102	buy	01-386-2773	1005-01-386-2773	Feeder, Auto	387-3470-9	17	50	595.20	595.20	595.20	595.20	595.20	595.20	

Use or disclosure of data contained on this sheet is subject to the restriction on the Title Page of this Proposal.

M230 30MM GUN AND APACHE AREA WEAPONS SYSTEM PRICE LIST
PERIOD OF PERFORMANCE - DATE OF AWARD THROUGH 31 JANUARY 02

REF #	Make/Buy	NIIN	NSN	DESCRIPTION	P/N	TTL Mos ARO	TTL Qty Per Mo.	1-3	4-10	11-25	26-50	51-100	101-200	201-500
103	buy	01-390-2499	1005-01-390-2499	Guide, Cart	7-317236225-3	11	25	154.50	154.50	154.50	154.50	133.43	115.20	
104	buy	01-390-2500	1005-01-390-2500	Guide Cart Ammo	7-317236224-3	15	25	298.20	298.20	298.20	282.20	282.20	264.74	
105	make	01-392-8598	1005-01-392-8598	M230 30MM Gun	387-3000-619	21	5	76764.04	66017.47	59317.86	54443.49	51033.48	48974.47	
106	buy	01-392-8600	1005-01-392-8600	Bolt Breech	387-3211-7	15	30	957.13	957.13	957.13	941.12	930.94	922.21	
107	make	01-393-3728	1680-01-393-3728	Index Drive Constant Sp	387-3400-609	19	20	18261.51	15529.61	13762.18	11909.51	11138.89	10638.08	
108	buy	01-393-5618	5365-01-393-5618	Spacer, Plate	387-3526-3	10	100	28.81	28.81	21.62	21.62	21.62	12.97	
109	buy	01-393-5619	5315-01-393-5619	Pin, Straight	387-3413-1	8	100	240.01	240.01	240.01	240.01	209.46	197.82	
110	make	01-393-7053	1560-01-393-7053	Cover Access	387-3402-603	10	25	2896.19	1246.58	823.35	658.85	557.85	507.33	
111	buy	01-393-7054	5315-01-393-7054	Pin, Shoulder	387-3525-3	9	100	108.04	108.04	108.04	64.83	43.21	27.37	
112	make	01-393-7055	1005-01-393-7055	Guide Assy	387-3489-7	10	50	864.45	864.45	838.54	784.76	771.68	764.46	
113	buy	01-393-9750	3040-01-393-9750	Housing Mechan	387-3415-1	9	50	72.03	72.03	72.03	72.03	57.63	48.99	
114	buy	01-395-2081	3020-01-395-2081	Chain, Roller	387-3717-5	13	35	764.11	764.11	733.17	728.10	719.37	706.59	
115	buy	01-395-7423	5340-01-395-7423	Stop	7-317221366-1	17	25	705.48	683.66	679.82	647.30	596.39	570.19	
116	buy	01-396-7881	3040-01-396-7881	Gearshaft, Spur	387-3786-3	11	25	798.50	798.50	798.50	693.44	640.77	539.07	
117	make	01-398-0015	1005-01-398-0015	Drive Assy, Azim	7-317221400-7	19	10	37831.84	33407.82	30955.46	29200.13	27953.72	26914.80	
118	make	01-410-8482	1005-01-410-8482	Housing, Mech	387-3423-603	15	20	3868.78	3868.78	3454.38	3319.38	3198.70	3094.10	
119	make	01-412-7578	3040-01-412-7578	Gearshaft, Mult	7-317236800-7	11	10	1606.91	1092.60	971.30	592.69	487.21	403.06	
120	make	01-451-4566	1005-01-451-4566	Firing Mech Gun	387-3958-11	10	30	1889.14	957.03	791.36	612.40	518.32	453.34	377.71

REF #	Make/Buy	NIIN	NSN	DESCRIPTION	P/N	TTL Mos ARO	TTL Qty Per Mo.	250-750	751-1250	1251-1750	1751-2250	2251-2750	2751-3250	3251-3750	3751-4250
121	buy	01-220-8523	5365-01-220-8523	Spacer for Fix	7-317236294-3	8	1000	10.75	10.24	10.24	10.24	10.24	10.24	10.24	10.24
122	buy	01-318-2901	5330-01-318-2901	Gasket	7-217221104-3	5	500	1.09	0.95	0.77	0.77	0.77	0.77	0.77	0.77
123	buy	01-318-2902	5330-01-318-2902	Gasket	7-217221114-3	5	500	1.09	0.95	0.77	0.77	0.77	0.77	0.77	0.77
124	buy	01-318-2903	5330-01-318-2903	Gasket	7-217221115-3	5	500	1.09	0.95	0.77	0.77	0.77	0.77	0.77	0.77
125	buy	01-320-5984	1005-01-320-5984	Feed Ammo	7-317233100-7	9	2500	52.38	48.78	47.99	47.99	47.99	47.99	47.99	47.99
126	buy	01-325-4262	1005-01-325-4262	Segment Upper For	7-317236260-5	6	250	59.52	56.32	56.32	56.32	56.32	56.32	56.32	56.32
127	buy	01-325-4263	1005-01-325-4263	Segment Lower For	7-317236261-5	6	250	62.72	59.84	59.84	59.84	59.84	59.84	59.84	59.84

Use or disclosure of data contained on this sheet is subject to the restriction on the Title Page of this Proposal.

ATTACHMENT 004

SPECIAL PACKAGING INSTRUCTION

Form Approved OMB No. 0704-0188

Public reporting burden for this collection of information is estimated to average 30 hours per response, including the time for reviewing instructions, searching existing data sources, gathering and maintaining the data needed, and completing and reviewing the collection of information. Send comments regarding this burden estimate or any other aspect of this collection of information, including suggestions for reducing this burden, to Washington Headquarters Services, Directorate for Information Operations and Reports, 1215 Jefferson Davis Highway, Suite 1204, Arlington, VA 22202-4302, and to the Office of Management and Budget, Paperwork Reduction Project (0704-0188), Washington, DC 20503. Please DO NOT RETURN your form to either of these addresses.

1. PART OR DRAWING NO. 7-317210000-607, 387-3000-619			2. CODE INDENT 02731	3. SPI NO.
4. NATIONAL STOCK NO.			5. DATE OF DRAWING 12/02/94	6. REVISION -
7. QUP 001	8. ICQ 000	9. UNIT PACK WT. 235.0 LBS	10. UNIT PACK CU 15.000 CU FT	11. UNIT PACK SIZE 88.0 x 22.8 x 20.3

12. PRESERVATION	18. STEPS	19. REQD	20. DESCRIPTION
a. LEVEL A MIL-P-116, METHOD IA-8			SEE BILL OF MATERIAL AND NOTES (SHEETS 2
b. LEVEL B N/A			THROUGH 8) FOR CONTAINER AND PACKING
13. CLEANING MIL-P-116, C-6			DETAILS.
14. DRYING MIL-P-116			
15. PACKING			
a. LEVEL A SEE NOTE A			
b. LEVEL B SEE NOTE A			
16. MARKING MIL-STD-129			

17. NOTES / DRAWING

A. THE LEVEL A UNIT CONTAINER IS AN ACCEPTABLE LEVEL A AND LEVEL B SHIPPING CONTAINER, NO FURTHER PACKING REQUIRED.

ITEM CHARACTERISTICS

SIZE: 99.0 X 10.0 X 12.5 (BARREL REMOVED FOR PACKING)

WEIGHT: 109.0 LBS

ESTIMATED FRAGILITY: 110 G'S

NOMENCLATURE: GUN, AIRCRAFT, 30MM

DJR

SPECIAL PACKAGING INSTRUCTION

Form Approved
OMB No. 0704-0188

1. PART OR DRAWING NO.	2. CODE IDENT	3. SPI NO.
7-317210000-607, 387-3000-619	02731	
4. NATIONAL STOCK NO.	5. DATE SUBMITTED (YYMMDD) 941202	6. REVISION -

DET	REQ	DESCRIPTION
26	1	BARRIER BAG: 30 X 54, MIL-B-117, TYPE I, CLASS E, STYLE I.
25	1	PAD: 1/2 X 7 X 11, POLYETHYLENE, PPP-C-1752, TYPE II, CLASS I.
24	1	BLOCK: 2 X 2 X 7-1/2, LUMBER, MIL-STD-731.
23	2	BATTEN: 1 X 3 X 7-1/2, LUMBER, MIL-STD-731.
22	1	BLOCK: 2 X 8 X 13-1/2, LUMBER, MIL-STD-731.
21	1	BLOCK: 2 X 8 X 13, LUMBER, MIL-STD-731.
20	1	PAD: 1-1/2 X 7 X 11, POLYETHYLENE, PPP-C-1752, TYPE II, CLASS I.
19	1	STOP: 1/2 X 7 X 11, PLYWOOD, NN-P-530, GROUP B.
18	1	PAD: 1/4 X 7 X 11, POLYETHYLENE, PPP-C-1752, TYPE II, CLASS I.
17	2	PAD: 1/4 X 3 X 14, POLYETHYLENE, PPP-C-1752, TYPE II, CLASS I.
16	2	PAD: 1/4 X 3 X 4, POLYETHYLENE, PPP-C-1752, TYPE II, CLASS I.
15	1	PAD: 1/4 X 3 X 9-1/4, POLYETHYLENE, PPP-C-1752, TYPE II, CLASS I.
14	1	PAD: 1/2 X 3 X 24-1/2, POLYETHYLENE, PPP-C-1752, TYPE II, CLASS I.
13	1	PAD: 1/4 x 5 x 11, POLYETHYLENE, PPP-C-1752, TYPE II, CLASS I
12	1	PAD: 1-1/2 X 3-1/2 X 2-1/2, POLYETHYLENE, PPP-C-1752, TYPE I, CLASS II
11	2	BLOCK: 3/4 X 3-1/2 X 2-1/2, PLYWOOD, NN-P-530, GROUP B.
10	1	BLOCK: 1/2 X 3-1/2 X 19-7/8, PLYWOOD, NN-P-530, GROUP B.
9	1	BLOCK: 2 X 4 X 19-7/8, LUMBER, MIL-STD-731.
8	4	BATTEN: 1 X 3 X 9-1/2, LUMBER, MIL-STD-731.
7	4	BATTEN: 1 X 3 X 13-1/2, LUMBER, MIL-STD-731.
6	1	PAD: 1/4 X 13 X 13-1/2, POLYETHYLENE, PPP-C-1752, TYPE II, CLASS I.
5	1	STOP: 1/2 X 13 X 13-1/2, PLYWOOD, NN-P-530, GROUP B.
4	2	CRADLE: 3/4 X 14-1/2 X 19-7/8, PLYWOOD, NN-P-530, GROUP B.
3	2	CRADLE: 3/4 X 3-3/4 X 19-7/8, PLYWOOD, NN-P-530, GROUP B.
2	2	CRADLE: 3/4 X 10-1/2 X 19-7/8, PLYWOOD, NN-P-530, GROUP B.
1	1	CONTAINER: I.D. 54 X 20 X 14-1/2, PPP-B-601, OVERSEAS, STYLE A.
		SEE NOTE 1.

SPECIAL PACKAGING INSTRUCTION

Form Approved OMB No. 0704-0188

Public reporting burden for this collection of information is estimated to average 30 min per response, including the time for reviewing instructions, searching existing data sources, gathering and maintaining the data needed, and completing and reviewing the collection of information. Send comments regarding this burden estimate or any other aspect of this collection of information, including suggestions for reducing this burden, to Washington Headquarters Services, Directorate for Information Operations and Reports, 1215 Jefferson Davis Highway, Suite 1204, Arlington, VA 22202-4302, and to the Office of Management and Budget, Paperwork Reduction Project (0704-0188), Washington, DC 20503. Please do NOT return your form to either of these addresses.

1. PART OR DRAWING NO.	2. CODE IDENT	3. SPI NO.
7-317210000-607, 387-3000-619	8V613	
4. NATIONAL STOCK NO.	5. DATE SUBMITTED (YYMMDD)	6. REVISION
	941202	-

GENERAL NOTES:

1. FABRICATE CONTAINER USING 1/4 INCH PLYWOOD PER NN-P-530, GROUP B. USE 1 X 4 CLEATS AND 4 X 4 SKIDS PER MIL-STD-731. LUMBER WIDTH AND THICKNESS ARE NOMINAL UNLESS OTHERWISE SPECIFIED.

2. BOND ALL PADS AS REQUIRED USING MMM-A-1617 ADHESIVE. CUT, FOLD AND BOND PADS OVER EDGES TO PROTECT BAGS FROM PUNCTURE.

3. WRAP RECOIL ADAPTERS AND BARREL SUPPORT WITH 1/8 INCH POLYETHYLENE CUSHIONING MATERIAL PER PPP-C-1752, TYPE II, CLASS 1. SECURE WITH TAPE CONFORMING TO PPP-T-60.

4. PAD SHARP CORNERS AND/OR PROJECTIONS OF THE RECEIVER WITH PPP-C-795, CUSHIONING MATERIAL. SECURE WITH PPP-T-60 TAPE.

5. CAP OR PLUG ELECTRICAL CONNECTORS AND/OR OPEN PORTS OR FITTINGS USING MIL-C-5501 CLOSURES OR EQUIVALENT.

6. APPLY MIL-L-3150 (P-7) PRESERVATIVE TO EXTERIOR METAL SURFACES, AVOID ELECTRICAL WIRES AND CONNECTORS.

7. AFTER PRESERVING RECEIVER, VACUUM SEAL IN BARRIER BAG DETAIL 26.

8. ROLL A 49 X 3 INCH PIECE OF MIL-P-3420, STYLE C, TYPE 1, CLASS 1 INTO A TUBE AND INSERT INTO BORE. WRAP EACH END OF BARREL WITH MIL-B-121, TYPE 1, GRADE A (2 PIECES 10 X 15), SECURE WITH PPP-T-60 TAPE. APPLY MIL-L-3150 PRESEVATIVE TO BARREL, WRAP WITH MIL-P-3420, STYLE C, TYPE 1, CLASS 1, (52 X 10) AND SECURE WITH PPP-T-60 TAPE, VACUUM SEAL IN BARRIER BAG, ITEM 27.

DET	REQ	DESCRIPTION
32	1	PAD: 1/4 X 6 X 11: POLYETHYLENE, PPP-C-1752, TYPE II, CLASS 1.
31	1	STOP: 1/2 X 6 X 11, PLYWOOD, NN-P-530.
30	1	PAD: 1-1/2 X 6 X 11, POLYETHYLENE, PPP-C-1752, TYPE II, CLASS 1.
29	2	CLEAT: 1 X 3 X 15, LUMBER, MIL-STD-731.
28	2	CLEAT: 1 X 3 X 54, LUMBER, MIL-STD-731.
27	1	BARRIER BAG: 7 X 56, MIL-B-117, TYPE 1, CLASS E, STYLE 1.

SPECIAL PACKAGING INSTRUCTION

Form Approved
OMB No. 0704-0188

1. PART OR DRAWING NO.	2. CODE IDENT	3. SPI NO.
7-317210000-607, 387-3000-619	02731	
4. NATIONAL STOCK NO.	5. DATE SUBMITTED (YYMMDD)	6. REVISION
	941202	

GENERAL NOTES (continued)

9. REMOVE BARREL BEFORE PACKING.

10. STENCIL "CENTER OF BALANCE" AND A ONE INCH WIDE STRIPE ON FRONT PANEL, AS ILLUSTRATED ON SHEET 8. STENCIL TOP PANEL "DO NOT NAIL COVER, STRAP ONLY". USE 1 INCH HIGH LETTERS WITH BLACK STENCIL INK (TT-I-1795).

11. SECURE COVER WITH THREE METAL STRAPS, ONE ON EACH END AND ONE IN THE CENTER, DO NOT NAIL COVER.

SPECIAL PACKAGING INSTRUCTION

Form Approved
OMB No. 0704-0188

Public reporting burden for this collection of information is estimated to average 30 min per response, including the time for reviewing instructions, searching existing data sources, gathering and maintaining the data needed, and completing and reviewing the collection of information. Send comments regarding this burden estimate or any other aspect of this collection of information, including suggestions for reducing this burden, to Washington Headquarters Services, Directorate for Information Operations and Reports, 1215 Jefferson Davis Highway, Suite 1204, Arlington, VA 22202-4302, and to the Office of Management and Budget, Paperwork Reduction Project (0704-0188), Washington, DC 20503. Please do NOT return your form to either of these addresses.

1. PART OR DRAWING NO.	2. CODE IDENT	3. SPI NO.
7-317210000-607, 387-3000-619	8V613	
4. NATIONAL STOCK NO.	**5. DATE SUBMITTED (YYMMDD)**	**6. REVISION**
	941202	-

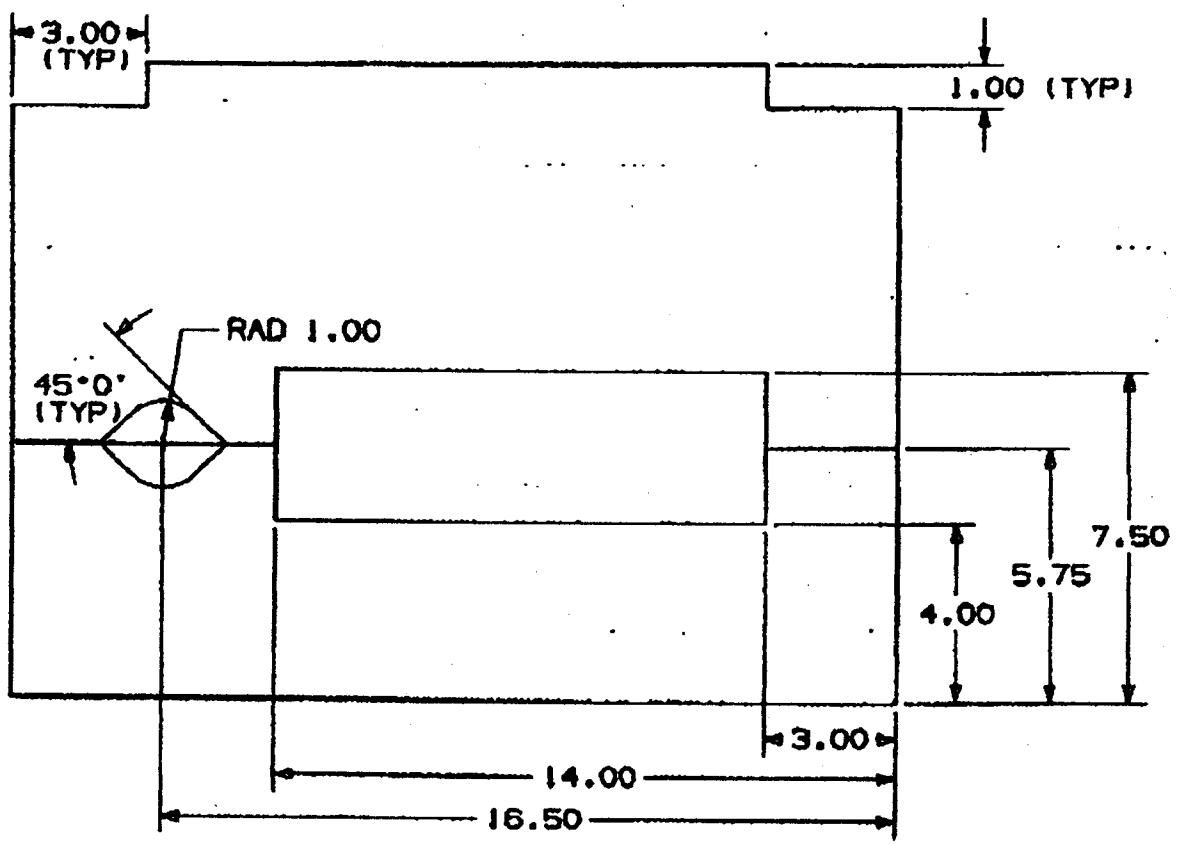

DETAIL 4

SPECIAL PACKAGING INSTRUCTION

Form Approved
OMB No. 0704-0188

1. PART OR DRAWING NO. 7-317210000-607, 387-3000-619	2. CODE IDENT 8V613	3. SPI NO.
4. NATIONAL STOCK NO.	5. DATE SUBMITTED (YYMMDD) 941202	6. REVISION -

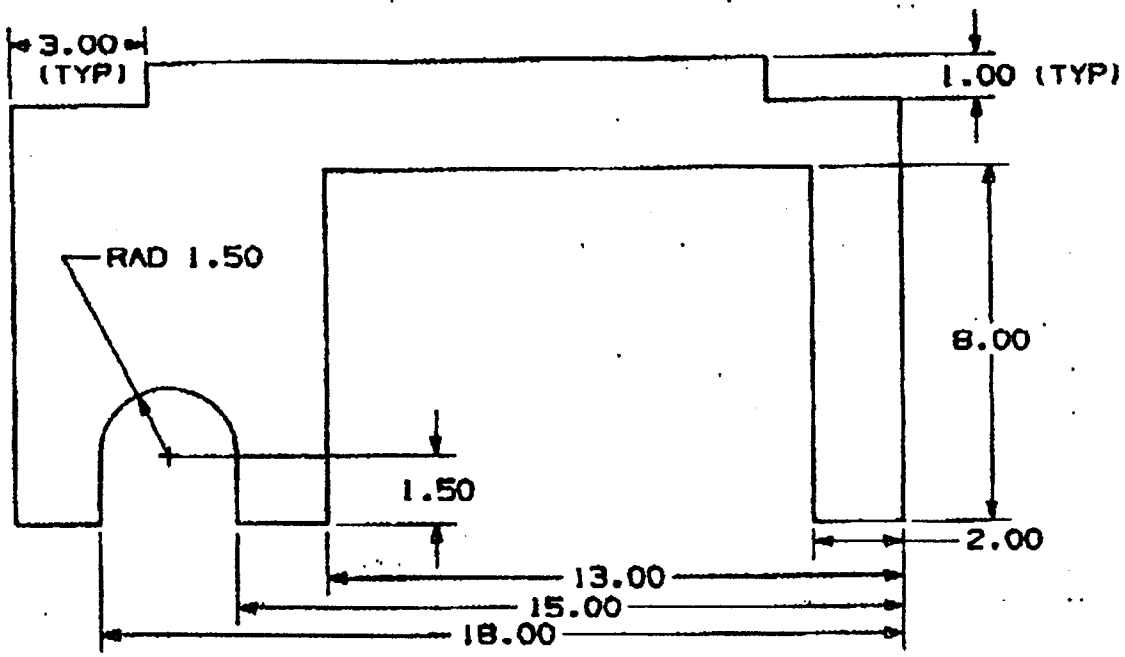

DETAIL 2

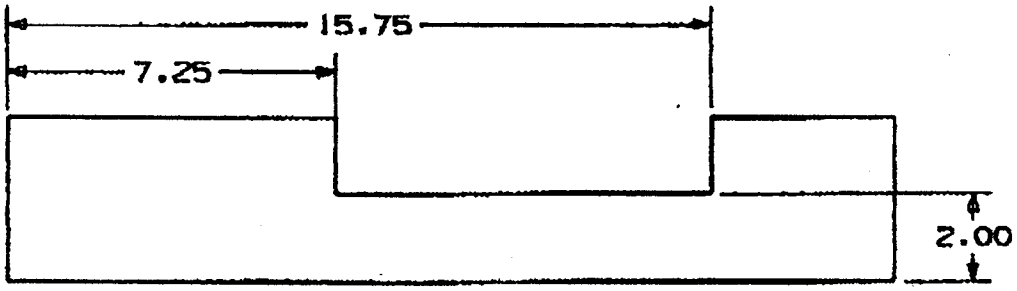

DETAIL 3

SPECIAL PACKAGING INSTRUCTION

Form Approved
OMB No. 0704-0188

Public reporting burden for this collection of information is estimated to average 30 minutes per response, including the time for reviewing instructions, searching existing data sources, gathering and maintaining the data needed, and completing and reviewing the collection of information. Send comments regarding this burden estimate or any other aspect of this collection of information, including suggestions for reducing this burden, to Washington Headquarters Services, Directorate for Information Operations and Reports, 1215 Jefferson Davis Highway, Suite 1204, Arlington, VA 22202-4302, and to the Office of Management and Budget, Paperwork Reduction Project (0704-0188), Washington, DC 20503. Please DO NOT RETURN your form to either of these addresses.

1. PART OR DRAWING NO.	2. CODE IDENT	3. SPI NO.
7-317210000-607, 387-3000-619	8V613	
4. NATIONAL STOCK NO.	5. DATE SUBMITTED (YYMMDD)	6. REVISION
	941202	-

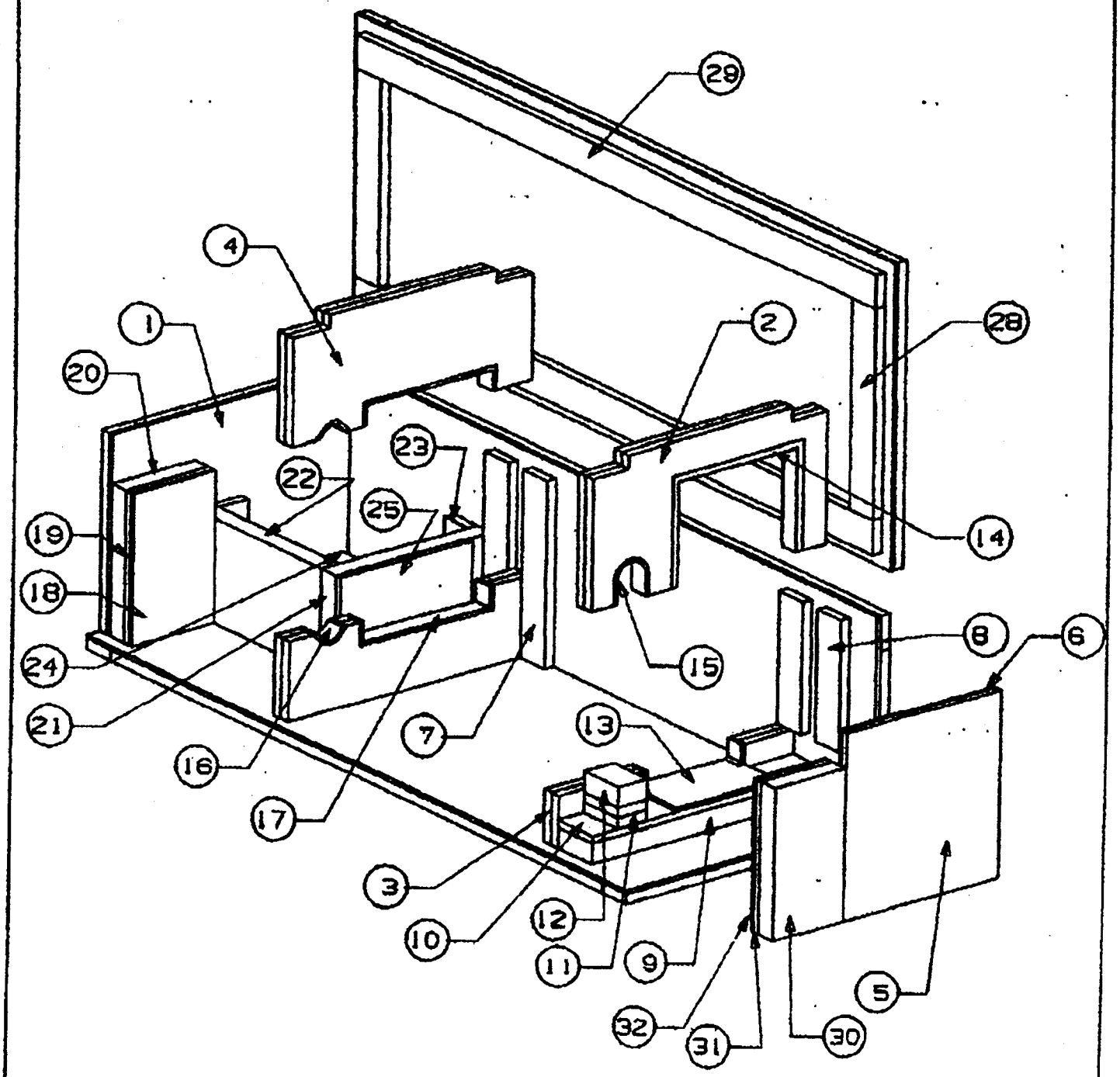

SPECIAL PACKAGING INSTRUCTION

Form Approved
OMB No. 0704-0188

1. PART OR DRAWING NO.	2. CODE IDENT	3. SPI NO.
7-317210000-607, 387-3000-619	8V613	
4. NATIONAL STOCK NO.	5. DATE SUBMITTED (YYMMDD)	6. REVISION
	941202	-

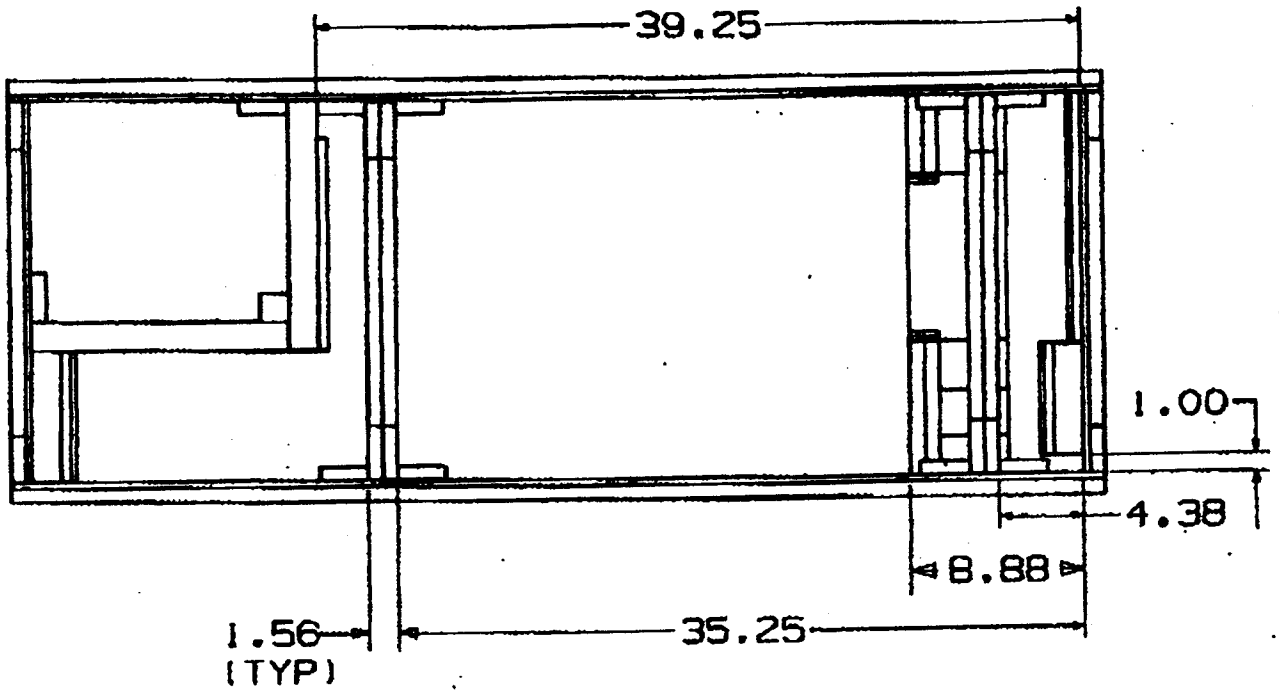

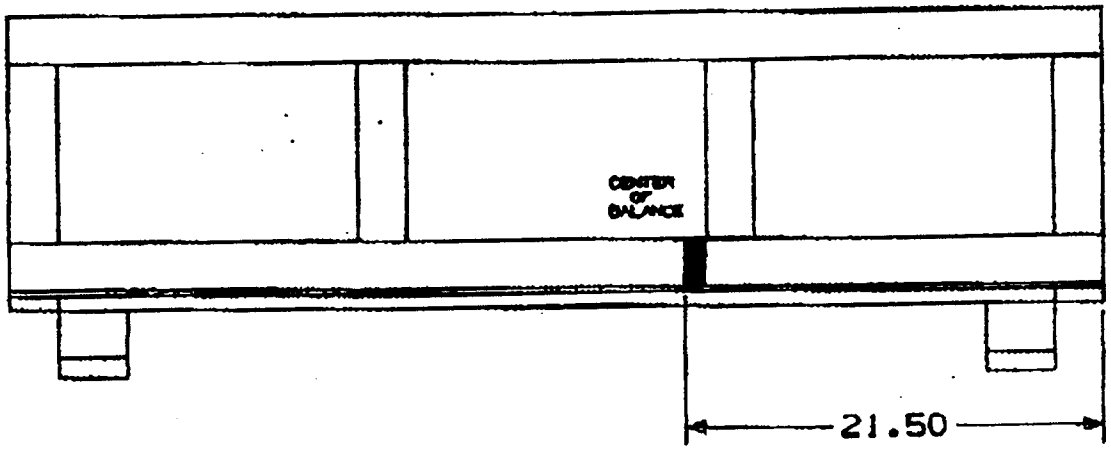

DOCUMENT SUMMARY LIST

Item: M230 GUNS/SPARES/REPAIR PARTS
NSN:
Control Number/PRON: NONE

Identifies all first tier documents (cited in SOW) (applicable DIDs). Also included are all referenced documents (2nd, (includes DID block 10 references), 3rd and lower tier) which have been tailored.

DOCUMENT CATEGORY:

CATEGORY O - Unless otherwise specified in the solicitation, contract, or contract modifications, all documents are for guidance and information only.

CATEGORY 1 - The requirements contained in the directly cited document are contractually applicable to the extent specified. All referenced documents are for guidance and information only.

CATEGORY 2 - The requirements contained in the directly cited document and the reference documents identified in the directly cited document are contractually applicable to the extent specified. All subsequently referenced documents are for guidance and information only.

CATEGORY 3 - Unless otherwise specified in the solicitation, contract or contract modification, all requirements contained in the directly cited document and all reference and subsequently referenced documents are contractually applicable to the extent specified.

Document Number (Contract Reference) Applicable Tailoring	Document Title	Document Date/ Document Category
1a. MIL-STD-2549 Table DIP 4-1	Configuration Management Data Interface	30 Jun 97 Cat 2
1b. DI-CMAN-81554 (seq A001)	Configuration Change Control Data Information Packet	30 Jun 97 Cat 2
2. ANSI/ISO/ASQC Q9001 Higher Level Contract Quality Requirement (Sec E)or equivalent	Quality Systems-Model for QA in Design/Devel., Prod., Installation & Servicing	1994
3. FAR PART 45 ACTBY INST, para 1,9	Federal Acquisition Regulation	1 Apr 1984 Cat 2
4. AR 710-3 ACTBY INST, para 4,7	Asset and Transaction Reporting System	16 Dec 1987 Cat 2
5a. N/A ACTBY INST, para 4a(1)	Statement of Work	N/A Cat 2

5b. DI-MGMT-80544A (DD Form 1423)	Transportation Discrepancy Report	08 Nov 1990 Cat 1
6a. N/A ACTBY INST, para 4a(2)	Statement of Work	N/A Cat 2
6b. DI-MGMT-80503 (DD Form 1423)	Report of Shipping (Item) and Packaging Discrepancy	30 Dec 1987 Cat 1
7a. N/A ACTBY INST, para 5	Statement of Work	N/A Cat 2
7b. DI-MGMT-80408B (DD Form 1423)	Request for Government Furnished Materiel	15 May 1998 Cat 1
8a. N/A ACTBY INST, para 6	Statement of Work	N/A Cat 2
8b. DI-MGMT-80438B (DD Form 1423)	Government Furnished Materiel (GFM) Consumption Report	15 May 1998 Cat 1
9a. N/A ACTBY INST, para 4b, 7	Statement of Work	N/A Cat 1
9b. DI-MISC-80914A (DD Form 1423)	Small Arms Serialization Program (SASP) Transaction Card	19 Jul 1991 Cat 1

ATTACHMENT 006

GUIDANCE ON DOCUMENTATION OF CONTRACT REQUIREMENTS LIST (CDRL)

The following information is furnished to provide guidance with respect to the abbreviations and codes utilized in various blocks of DD Form 1423, Contract Data Requirements List.

Block 1. Sequence Number. This number is specified by DOD components in accordance with FAR Supplement Subpart 4.71.

Block 2. Title of Description of Data. This represents the title or brief description of the data. This title should be identical to the Data Item Description (DID) title with Block 3 being used for further identification, if required.

Block 3. Subtitle of Data. If the title requires further identification, a subtitle is entered.

Block 4. Authority, Data Item Number. Data item number of the DID which provides the data preparation instructions.

Block 5. Contract Reference. The specific paragraph number of the contract procurement request, system specification, or other applicable document which identifies the effort associated with the data item authorized by Block 4 above.

Block 6. Technical Office. The office that is responsible for assuring the adequacy of the data item unless this responsibility is delegated elsewhere in the contract or in Block 7 on the DD Form 1423.

Block 7. DD Form 250 Requirement. This block designates the location (contractor's facility or destination) for performance of Government inspection and acceptance. The applicable codes for inspection and acceptance are cited below. The Government activity to perform the destination acceptance task is entered in Block 14 as the first addressee.

Code	Inspection	Acceptance
SS	*Source(DD Form 250)	*Source(DD Form 250)
DD	Destination(DD Form 250)	Destination(DD Form 250)
SD	*Source(DD Form 250)	Destination(DD Form 250)
DS	Destination(DD Form 250)	*Source(DD Form 250)
LT	Letter of Transmittal only	
NO	No inspection or acceptance required	
XX	Inspection/acceptance requirements specified elsewhere in the contract.	

*Source indicates contractor's facility,

Block 8. Approval Code. Items of critical data requiring specified advanced written approval, such as test plans, are identified by an "A" in this field. This data requires submission of a preliminary draft prior to publication of the final document. When advanced approval is not required, this field is blank.

Block 9. Distribution Statement Required. The code letter corresponding to the distribution statement to be marked on the technical data item by the contractor, in accordance with DoD Directive 5230.24 and the guidance in DoD 5010.12-M.

Block 10. Frequency. The codes that appear in this block are cited below:

ANNLY	Annually	ASGEN	As generated*
ASREQ	As required*	BI-MO	Every 2 months
BI-WE	Every 2 weeks	DAILY	Daily
DFDEL	Deferred Delivery	MTHLY	Monthly
ONE/P	One Preliminary	ONE/R	One time with revisions
QRTLY	Quarterly	R/ASR	Revision as required*
SEMIA	Every 6 months	WEKLY	Weekly

XTIME** Number of time to be submitted (1TIME, 2TIMES, etc.)

*Use of these codes requires further explanation in block 16 to provide the contractor with guidance necessary to accurately price the deliverable data item.

**A number must be inserted in place of the "X".

Block 11. As of Date (AOD). When data it submitted only once, this block indicates the number of days the data is to be submitted prior to the end of the reporting period; e.g., "15" would place the AOD for this report as 15 days before the end of each month, quarter, or year depending on the frequency established in Block 10; "0" places the AOD at the end of the month, quarter, or year. Further guidance is shown in Block 13 or 16 as required.

Block 12. Date of First Submission. This block indicates the initial data submission date (Year/Month/Day). When the contract start date has not been established, this block indicates the number of days after the contract start date that the data is due; e.g., 30 days after contract (DAC). Further information, if required is contained in Block 13. "DFDEL" indicates deferred delivery.

Block 13. Date of Subsequent Submission/Event Identification. When data is submitted more than once, the date(s) of subsequent submission(s) is indicated in this block. Example: "Not later than (NLT) 15 days before start of production"; "45 days before first article", etc.

Block 14. Distribution and Addressees. Addressees and number of copies (draft/regular/reproducible) to be forwarded to each addressee as cited in this block. Addressees are indicated by office symbols (i.e., AMSIO-XYZ). A list explaining these symbols and their addressees is attached to the form. When reproducible copies are required, the type of copies required will be cited in this block or Block 16.

NOTE: Unless otherwise cited in Block 10 of DD Form 1664, entries in Blocks 3 through 9 on DD Form 1664, Data Item Descriptions, are for information purposes only and are not contractually binding.

NOTE: It is required that data items be delivered using electronic media. Where possible electronic transmission (e-mail) is the most preferred method. Refer to the Contract Data Requirements List (CDRL), DD Form 1423 for more specific information (i.e., e-mail addresses, etc.)

For narrative kinds of reports, submission of a 3 1/2 inch disk in Rich Text Format (RTF), Microsoft Word or by e-mail is acceptable.

For spreadsheets or database kinds of reports, the acceptable software packages would be Microsoft Office products, i.e., Access or Excel. If these packages are not available, the information could be forwarded using a word processing kind of document saved in a Rich Text Format (RTF).

attachment 007

1. MATERIAL / COMPONENT / ASSEMBLY	3. NUMBER	4. REVISION
Cartridge, 30mm, Target Practice, M788	1509	N

5. APPLICABLE FEDERAL ACQUISITION REGULATION (FAR) SAFETY CLAUSE: 28.7102

PART I - SENSITIVITY *(Apparatus and Comparison Values)*

6. FRICTION TEST	7. IMPACT TEST	8. ELECTROSTATIC DISCHARGE TEST
NA	NA	NA

PART II - HAZARDS

9. FIRE	10. AUTO IGNITION TEMP	11. FLASH POINT	12. DECOMPOSITION PRODUCTS
Low	NA	NA	Toxic, Avoid Inhalation and Ingestion

13. FLAMMABLE AND/OR EXPLOSIVE LIMITS a. LOWER PERCENT	b. UPPER PERCENT	14. EXPLOSION	15. EXPLOSIVE TEMP. (5 Sec.)	16. DUSTS
NA	NA	Low	NA	NA

17. HEALTH HAZARD INFORMATION (Toxicity)	18. UNPACKED (In-Process) HAZARD CLASS *(Specify Quantities Involved)*
Not Toxic	Class 1.4

19. SPECIAL REQUIREMENTS (If additional space is needed, use plain bond paper)

Ref-Dwg: 11825947 and Spec: DOD-C-63980

Approved Packaging Drawings: (See Attached Sheet)

** (See Attached Sheet)

PART III - SHIPPING / STORAGE CLASSIFICATION OF ITEM WHEN PACKED IN ACCORDANCE WITH APPROVED PACKING DRAWINGS

20. DOD HAZARD CLASS/DIV	21. DOD STORAGE COMPATIBILITY GROUP	22. DOT HAZARD CLASSIFICATION	23. DOT CONTAINER MARKING
1.4C	C	1.4C	**

24. PREPARED BY (Author)

a. TYPED OR PRINTED NAME	b. SIGNATURE	c. ORGANIZATION
R. W. BATSON	R. W. Batson	Safety Office, ARDEC

25. REVIEWED BY

a. TYPED OR PRINTED NAME	b. SIGNATURE	c. ORGANIZATION
C. L. NGUYEN	Chau L. Nguyen	Safety Office, ARDEC

26. SAFETY OFFICE OR AUTHORIZED REPRESENTATIVE

a. TYPED OR PRINTED NAME	b. SIGNATURE	c. ORGANIZATION
C. R. PETERS, P.E.	CRPeters	Safety Office, ARDEC

The information relating to safety (herein referred to as "safety data") contained in this document is limited to those instances when the document is provided as a part of a procurement/production package which involves the development, testing, storage, manufacture, modification, renovation, demilitarization, packaging, transportation, handling, disposal, inspection, repair or any other use of the item, (material/component/assembly) which is specified in the contract. The safety data contained herein are examples which shall be used by the contractor to alert contractor personnel as well as other personnel of hazards associated with the procurement/production of the item. No representation is made that compliance with the information provided will prevent any accidents to persons or property or that additional warnings may not be appropriate. Neither the foregoing nor any act or failure to act by the Government in regard to alerting personnel to the hazards of the item shall affect or relieve the contractor of responsibility for the safety of contractor personnel or property and for the safety of the general public in connection with the performance of the contract, or impose or add to any liability of the Government for such safety.

DD Form 2387-E, APR 88

ARDEC V1.3

1509
N
19 Aug 98

Cartridge, 30mm, TP, M788

Spec: DOD-C-63980

HCSDS: 1509

Dwg: 11825947, Rev-G

Case, Cartridge, f/30mm M788

HCSDS: 1508

Dwg: 11825901

Projectile, 30mm

Spec: DOD-P-63977

Dwg: 9399639, Rev-E

Propellant, WC 855

HCSDS: 1499

Dwg: 11825946

"OR"

Propellant, RP-788

Spec: MIL-P-3984

HCSDS: 2617
Dwg: 12977526

packaged in accordance with packaging drawings.

Special Requirements: (Cont'd)

1. Classifications* are for shipment and storage when item is packaged in accordance with packaging drawings.

110 Cartridges - Bulk (Clip/Strip): 12902727, 12902718, 10542565 (NSN: 1305-01-268-7274 DODIC: B118 UN Ident 0339 DOT Authorization, Ref: EX-8901043)

121 Cartridges - Bulk (Tubes): 11825951, 11825890, 11825893 (NSN: 1305-01-079-5386 DODIC: B118 UN Ident - 0339 DOT Authorization, Ref: EX-8503016)

72 Cartridges - M29 (RH) Linked: 11825952, 11825891, 11825893 (NSN: 1305-01-0078-5505 DODIC: B120 UN Ident - 0339 DOT Authorization, Ref: EX-8503016)

72 Cartridges - M29 (LH) Linked: 11825953, 11825892, 11825893 (NSN: 1305-01-077-2932 DODIC: B119 UN Ident - 0339 DOT Authorization, Ref: EX-8503016)

2. In accordance with applicable parts of 49CFR for proper description, packaging, marking and classification, the following Hazard Classification is assigned to the subject item:

DOD Hazard Class/Div/SCG: 1.4C
DOT Hazard Class: 1.4C
(Section 173, Subpart C, Part 173.52)
DOT Label: Explosive 1.4C
(Section 172, Subpart E (172.411 (c) & (d))
DOT Proper Shipping Name (PSN): Cartridges for Weapons, Inert Projectile
(Section 172, Subpart B and Part 172.101)
UN Serial Number PSN: 0339 (Cartridges for Weapons, Inert Projectile)
DOT Container Marking: Cartridges for Weapons, Inert Projectile
UN: 0339
NSN: (as applicable)
DOT Authorization: (as applicable)
(Part 172, Subpart D, Part 172.301(a) and 172.320(a))
Packaging Method: PI-130
Explosive Weight for QD Determination: lbs(kgs): 0.1113 (0.0505)

attachment 008

Cartridge, 30mm, High Pressure Test, M883	1810	D

5 APPLICABLE FEDERAL ACQUISITION REGULATION (FAR) SAFETY CLAUSE: 28.7102

PART I - SENSITIVITY *(Apparatus and Comparison Values)*

6 FRICTION TEST	7 IMPACT TEST	8. ELECTROSTATIC DISCHARGE TEST
NA	NA	NA

PART II - HAZARDS

9. FIRE	10. AUTO IGNITION TEMP.	11. FLASH POINT	12. DECOMPOSITION PRODUCTS
Low	NA	NA	Toxic, Avoid Inhalation and Ingestion

13. FLAMMABLE AND/OR EXPLOSIVE LIMITS		14. EXPLOSION	15. EXPLOSIVE TEMP. (5 Sec.)	16. DUSTS
a. LOWER PERCENT	b. UPPER PERCENT			
NA	NA	Low	NA	NA

17 HEALTH HAZARD INFORMATION *(Toxicity)*	18. UNPACKED *(In-Process)* HAZARD CLASS *(Specify Quantities Involved)*
Not Toxic	Class 1.4

19 SPECIAL REQUIREMENTS *(If additional space is needed, use plain bond paper)*

Ref-Dwg: 11825941 and Spec: DOD-C-64018

Approved Packaging Drawings: (See Attached Sheet)

*** (See Attached Sheet)

PART III - SHIPPING / STORAGE CLASSIFICATION OF ITEM WHEN PACKED IN ACCORDANCE WITH APPROVED PACKING DRAWINGS

20. DOD HAZARD CLASS/DIV	21. DOD STORAGE COMPATIBILITY GROUP	22. DOT HAZARD CLASSIFICATION	23. DOT CONTAINER MARKING
1.4	C	1.4C	***

24 PREPARED BY *(Initiator)*		
a TYPED OR PRINTED NAME	b SIGNATURE	c. ORGANIZATION
R. W. BATSON	RWBatson	SAFETY OFFICE, ARDEC
25 CONCURRED IN BY		
a TYPED OR PRINTED NAME	b. SIGNATURE	c. ORGANIZATION
C. L. NGUYEN	Chau L. Nguyen	SAFETY OFFICE, ARDEC
26 SAFETY CHIEF OR AUTHORIZED REPRESENTATIVE		
a TYPED OR PRINTED NAME	b SIGNATURE	c. ORGANIZATION
C. PETERS, P.E.	C. Peters	SAFETY OFFICE, ARDEC

The information relating to safety (herein referred to as "safety data") contained in this document is limited to those instances when the document is provided as a part of a procurement/production package which involves the development, testing, storage, manufacture, modification, renovation, demilitarization, packaging, transportation, handling, disposal, inspection, repair or any other use of the item, (material/component/assembly) which is specified in the contract. The safety data contained herein are examples which shall be used by the contractor to alert contractor personnel as well as other personnel of hazards associated with the procurement/production of the item. No representation is made that compliance with the information provided will prevent any accident to persons or property or that additional warnings may not be appropriate. Neither the foregoing nor any act or failure to act by the Government in regard to alerting personnel to the hazards of the item shall affect or relieve the contractor of responsibility for the safety of contractor personnel or property and for the safety of the general public in connection with the performance of the contract, or impose or add to any liability of the Government for such safety.

DD Form 2357, APR 85

(2)

Cartridge, 30mm, HPT, M883

Spec: DOD-C-64018

HCSDS: 1810

Dwg: 11825941, Rev-D

Case, Cartridge, Primed, f/M788, M789, XM799 & M883

Spec: DOD-C-63982
HCSDS: 1508
Dwg: 11825901

Propellant, WC-855

HCSDS: 1499

Dwg: 11825946

Projectile, 30mm, HPT
(Solid)

Dwg: 11825942, Rev-A
(or) 12944338, Rev-

25 Apr 95

Special Requirements (Con't)

1. In accordance with applicable parts of 49CFR for proper description, packaging, marking and classification, the following Hazard Classification is assigned to the subject item:

DOD Hazard Class/Div/SCG: 1.4C
DOT Hazard Class: 1.4C
(Section 173, Subpart C, Section 173.52)
DOT Label: Explosive 1.4C
(Section 172, Subpart E (172.411 (c) & (d)
DOT Proper Shipping Name (PSN): Cartridges for Weapons, Inert Projectile
(Section 172, Subpart B and Section 172.101)
UN Serial Number: 0339
DOT Container Marking: Cartridges for Weapons, Inert Projectile
UN: 0339
NSN: 1305-01-168-0538
DOT Authorization: EX: 9502041
(Section 172, Subpart D, Section 172.301(a) and 172.320(a))
Packaging Method: US005
Explosive Weight for QD Determination: lbs (kgs): 0.1201 (0.0548)

2. Approved Packaging Drawings:

121 Cartridges - Bulk/Tubes: 11825940; 11825890, 11825893, (NSN: 1305-01-168-0538 DODIC: B135)

72 Cartridges - Linked/RH: 11825891; 11825889

72 Cartridges - Linked/LH: 11825892; 11825889

EXHIBIT A

CONTRACT DATA REQUIREMENTS LIST
DD FORM 1423 (MECHANIZED)

CATEGORY: MISC SYSTEM/ITEM: M230 GUNS/SPARES/REPAIR PARTS
TO CONTRACT/PR: NONE

1. SEQUENCE NUMBER 14. DISTRIBUTION DRFT/REG/REPRO COPIES
2. TITLE OF DATA ITEM
3. SUBTITLE
4. DATA ITEM NUMBER
5. CONTRACT REFERENCE
6. TECHNICAL OFFICE 7. DD 250 8. APP CODE 9. DIST STATEMENT REQUIRED
10. FREQUENCY 11. AS OF DATE 15. TOTAL:
12. DATE OF 1ST SUBMISSION 13. DATE OF SUBSEQUENT SUBMISSION
16. REMARKS

---

1. A001

14. AMSTA-AR-ES (ECALS) / /

2. CONFIGURATION CHANGE CONTROL*
3. ENGINEERING ACTIONS

4. DI-CMAN-81554

5. SECTION C

6. AMSTA-AR-ES 7. NO 8. - 9. **

10. ASREQ 11. --- 15. TOTAL 0/ 0/ 0

12. ASREQ 13. ASREQ

16. REMARKS
PREPARE ENGINEERING ACTIONS IAW DI-CMAN-81544 AND SUBMIT ELECTRONICALLY VIA ECALS WORLDWIDE WEB PAGE HTTP://EDMD4.PICA.ARMY.MIL/.*DATA INFORMATION PACKET **DISTRIBUTION STATEMENT WILL BE ASSIGNED AND IMPLEMENTED BY THE DOD CONFIGURATION MANAGER.THE POC FOR ECALS IS LEE SADAUSKAS,AMSTA-AR-QAW,(973)724-6626 LEES@PICA.ARMY.MIL.

---

1. A002

14. AMSTA-LC-CIAT / 1/

2. TRANSPORTATION DISCREPANCY REPORT
3.

4. DI-MGMT-80544A

5. SOW, ACTBY INST,para 3a(1)

6. AMSTA-LC-CIA 7. NO 8. 9. N/A

10. ASREQ 11. ASREQ 15. TOTAL 0/ 1/ 0

12. * 13.

16. REMARKS
*SUBMISSION REQUIRED UPON DISCOVERY OF TRANSPORTATION DISCREPANCY WHEN MATERIEL IS RECEIVED AT CONTRACTOR'S FACILITY.
E-MAIL: mosleya@tacom.army.mil

---

1. A003 14.
AMSTA-AC-CIAC / 1/

2. REPORT OF SHIPPING (ITEM) AND
3. PACKAGING DISCREPANCY

4. DI-MGMT-80503

5. SOW,ACTBY INST,para 3a(2)

6. AMSTA-LC-CIA 7. NO 8. 9. N/A

10. ASREQ 11. ASREQ 15. TOTAL 0/ 1/ 0

12. * 13.

16. REMARKS
*SUBMISSION REQUIRED UPON DISCOVERY OF SHIPPING DISCREPANCY WHEN MATERIEL IS RECEIVED AT CONTRACTOR'S FACILITY. REPORT SHALL BE SUBMITTED WITHIN 3 DAYS OF DISCOVERY.
E-MAIL: rods@ria.army.mil

---

1. A004 14.
AMSTA-LC-CIAT / 1/

2. REQUEST FOR GOVERNMENT FURNISHED
3. MATERIEL (GFM)

4. DI-MGMT-80408B

5. SOW, ACTBY INST,para 4

6. AMSTA-LC-CIA 7. NO 8. 9.N/A

10. ASREQ 11. ASREQ 15. TOTAL 0/ 1/ 0

12. * 13.

16. REMARKS
*SUBMISSION REQUIRED TO RECEIVE GFM
E-MAIL: mosleya@tacom.army.mil

---

1. A005 14.
AMSTA-LC-CIAT / 1/

2. GOVERNMENT FURNISHED MATERIAL (GFM)
3. CONSUMPTION REPORT

4. DI-MGMT-80438B

5. SOW, ACTBY INST,para 5

6. AMSTA-LC-CIA 7. DD 8. 9. N/A

10. MTHLY 11. 0 TIME 15. TOTAL 0/ 1/ 0

12. 40 DAC 13.

16. REMARKS
SUBMISSION REQUIRED TO REFLECT GFM CONSUMED DURING REPORT PERIOD-NEGATIVE REPORT REQUIRED.BLK 10:10TH DAY OF MONTH FOLLOWING REPORT MONTH.
E-MAIL: mosleya@tacom.army.mil

---

1. A006

2. SMALL ARMS SERIALIZATION PROGRAM
3. (SASP) TRANSACTION CARD

4. DI-MISC-80914A

5. SOW, ACTBY INST para 6

6. AMSTA-LC-CIA 7. DD 8. 9.N/A

10. ASREQ 11. ASREQ

12. * 13.

14.
AMXLS-MD / 1/

STORAGE LOC / 1/

15. TOTAL 0/ 2/0

16. REMARKS
*SUBMISSION REQUIRED IMMEDIATELY UPON GOVERNMENTS ACCEPTANCE OF WEAPONS, ALSO REQUIRED IMMEDIATELY UPON RECEIPT OF CONTRACTOR.
E-MAIL: uit@logsa.army.mil

APPROVED BY: STEPHEN J HANSEN, SDMO, AMSTA-AR-QAD DATE: 01/26/2000

LIST OF ADDRESSES

Commander
U.S. Army Industrial Operations Command
ATTN: AMSIO-_____ (see block 14 of DD Form 1423 for symbols that apply)
Rock Island, IL 61299-6000

Commander
U.S. Army Tank-automotive and Armament Command
ATTN: AMSTA-_____ (see block 14 of DD Form 1423 for symbols that apply)
Rock Island, IL 61299-8630

Director
U.S. Army, Armament, Research, Development & Engineering Center
ATTN: AMSTA-AR- _____*(R) (see block 14 of DD Form 1423 for symbols that apply)
Rock Island, IL 61299-7300

Commander
U.S. Army, Armament, Research, Development & Engineering Center
ATTN: AMSTA-AR- _____*(D) (see block 14 of DD Form 1423 for symbols that apply)
Picatinny Arsenal, NJ 07806-5000

*When letter in parentheses at end of office symbol is a (R), use Rock Island address; when it is a (D), use Picatinny Arsenal address.

EMAIL addresses:

AMSTA-AR-QAA(D)	aie-qaa@pica.army.mil
AMSTA-AR-QAC(D)	aie-qac@pica.army.mil
AMSTA-AR-QAT(D)	aie-qat@pica.army.mil
AMSTA-AR-QA__(R)	amsta-ar-qa-cdrl@ria.army.mil

INSTRUCTIONS FOR COMPLETING DD FORM 1423
(See DoD 5010.12-M for detailed instructions)

FOR GOVERNMENT PERSONNEL

Item A. Self-explanatory.

Item B. Self-explanatory.

Item C. Mark (X) appropriate category: TDP - Technical Data Package; TM - Technical Manual; Other - other category of data, such as AProvisioning≅, AConfiguration Management≅, etc.

Item D. Enter name of system/item being acquired that data will support.

Item E. Self-explanatory (to be filled in after contract award).

Item F. Self-explanatory (to be filled in after contract award).

Item G. Signature of preparer of CDRL.

Item H. Date CDRL was prepared.

Item I. Signature of CDRL approval authority.

Item J. Date CDRL was approved.

Item 1. See DoD FAR Supplement Subpart 4.71 for proper numbering.

Item 2. Enter title as it appears on data acquisition document cited in Item 4.

Item 3. Enter subtitle of data item for further definition of data item (optional entry).

Item 4. Enter Data Item Description (DID) number, military specification number, or military standard number listed in DoD 5010.12-L (AMSDL), or one-time DID number, that defines data content and format requirements.

Item 5. Enter reference to tasking in contract that generates requirement for the data item (e.g., Statement of Work paragraph number.

Item 6. Enter technical office responsible for ensuring adequacy of the data item.

Item 7. Specify requirement for inspection/acceptance of the data item by the Government.

Item 8. Specify requirement for approval of a draft before preparation of the final data item.

Item 9. For technical data, specify requirement for contractor to mark the appropriate distribution statement on the data (ref. DoD 5230.r\24).

Item 10. Specify number of times data items are to be delivered.

Item 11. Specify as-of date of data item, when applicable.

Item 12. Specify when first submittal is required.

Item 13. Specify when subsequent submittals are required, when applicable.

Item 14. Enter addressees and number of draft/final copies to be delivered to each addressee. Explain reproducible copies in Item 16.

Item 15. Enter total number of draft/final copies to be delivered.

Item 16. Use for additional/clarifying information for Items 1 through 15. Examples are: Tailoring of documents cited in Item 4; Clarification of submittal dates in Items 12 and 13; Explanation of reproducible copies in Item 14; Desired medium for delivery of the data item.

FOR THE CONTRACTOR

Item 17. Specify appropriate price group from one of the following groups of effort in developing estimated prices for each data item listed on the DD Form 1423.

a. Group I. Definition - Data which is not otherwise essential to the contractor=s performance of the primary contracted effort (production, development, testing and administration) but which is required by DD Form 1423.

Estimated Price - Costs to be included under Group I are those applicable to preparing and assembling the data item in conformance with Government requirements, and the administration and other expenses related to reproducing and delivering such data items to the Government.

b. Group II. Definition - Data which is essential to the performance of the primary contracted effort but the contractor is required to perform additional work to conform to Government requirements with regard to depth of content, format, frequency of submittal, preparation, control, or quality of the data item.

Estimated Price - Costs to be included under Group II are those incurred over and above the cost of the essential data item without conforming to Government requirements, and the administrative and other expenses related to reproducing and delivering such data item to the Government.

c. Group III. Definition - Data which the contractor must develop for his internal use in performance of the primary contracted effort and does not require any substantial change to conform to Government requirements with regard to depth of content, format, frequency of submittal, preparation, control, and quality of the data item.

Estimated Price - Costs to be included under Group III are the administrative and other expenses related to reproducing and delivering such data item to the Government.

d. Group IV. Definition - Data which is developed by the contractor as part of his normal operating procedures and his effort in supplying these data to the Government is minimal.

Estimated Price - Group IV items should normally be shown on the DD Form 1423 as no cost.

Item 18. For each data item, enter an amount equal to that portion of the total price which is estimated to be attributable to the production or development for the Government of that item of data. These estimated data prices shall be developed only from those costs which will be incurred as a direct result of the requirement to supply the data, over and above those costs which would otherwise be incurred in performance of the contract if no data were required. These estimated data prices shall not include any amount for rights in data. The Government=s right to use the data shall be governed by the pertinent provisions of the contract.