NOTICE: WHEN GOVERNMENT DRAWINGS, SPECIFICATIONS, OR OTHER DATA ARE USED FOR ANY PURPOSE OTHER THAN IN CONNECTION WITH A DEFINITELY RELATED GOVERNMENT PROCUREMENT OPERATION, THE UNITED STATES GOVERNMENT THEREBY INCURS NO RESPONSIBILITY NOR ANY OBLIGATION WHATSOEVER; AND THE FACT THAT THE GOVERNMENT MAY HAVE FORMULATED, FURNISHED, OR IN ANY WAY SUPPLIED THE SAID DRAWINGS, SPECIFICATIONS OR OTHER DATA IS NOT TO BE REGARDED BY IMPLICATION OR OTHERWISE AS IN ANY MANNER LICENSING THE HOLDER OR ANY OTHER PERSON OR CORPORATION, OR CONVEYING ANY RIGHTS OR PERMISSION TO MANUFACTURE, USE, OR SELL ANY PATENTED INVENTION THAT MAY IN ANY WAY BE RELATED THERETO.

NOTICE: THIS DRAWING IS FOR USE ONLY IN CONNECTION WITH PROCUREMENT BY THE UNITED STATES GOVERNMENT AND SHALL NOT BE USED FOR REPRODUCED OTHER WHOLLY OR IN PART FOR ANY OTHER PURPOSE EXCEPT WHEN SPECIFICALLY AUTHORIZED

LTR	
C	REDRAWN. REPLACE DATED 1 SEPT 78
D	NOR 399-056-0
E	NOR 399-060-0
F	NOR Z07-033C1

NOTES-CONT
7. PRIOR TO CLOSURE OF BAG, EVACUATE EXCESS AIR. CLOSURE OF ITEM 3 SHALL BE ACCOMPLISHED BY HEAT SEALING IN ACCORDANCE WITH BAG SUPPLIERS RECOMMENDED REQUIREMENTS FOR TEMPERATURE, DWELL, AND PRESSURE.

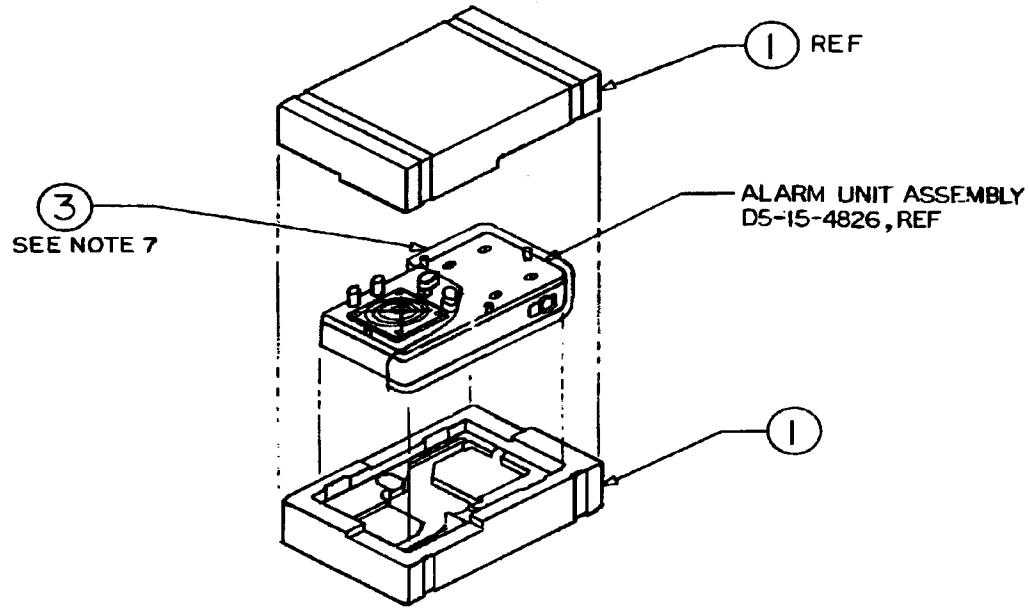

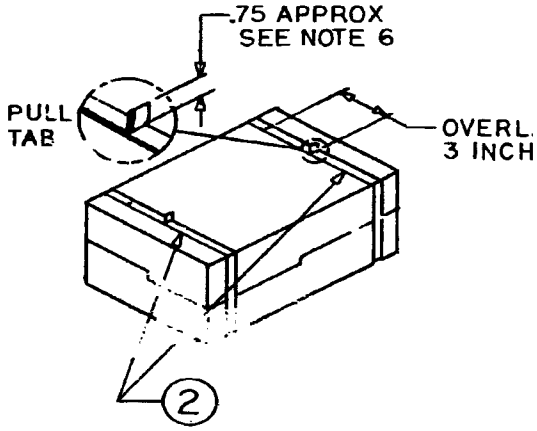

CLOSURE VIEW

REVISIONS			
LTR	DESCRIPTION	DATE	APPROVED
C	REDRAWN. REPLACES C5-15-6568 REV B, DATED 1 SEPT 78	10 APR 80	JDA/JRK
D	NOR 399-056-001 INC	22 FEB 84	JRK
E	NOR 399-060-001 INC	20 JUN 84	JRK
F	NOR Z07-033C1-003, 5 NOV 86	13 NOV 86	

OF ITEM 3
ITH BAG
WELL, AND PRESSURE.

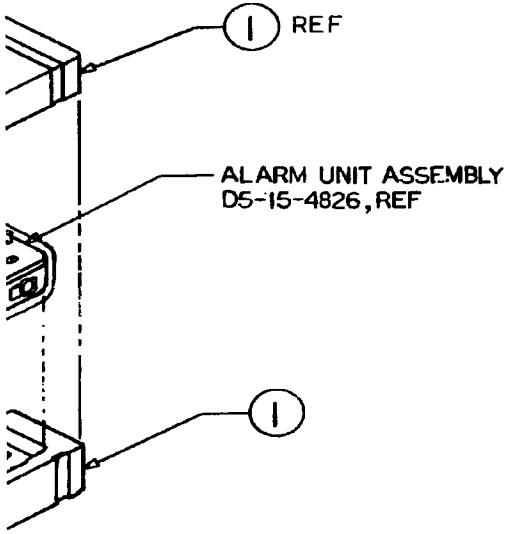

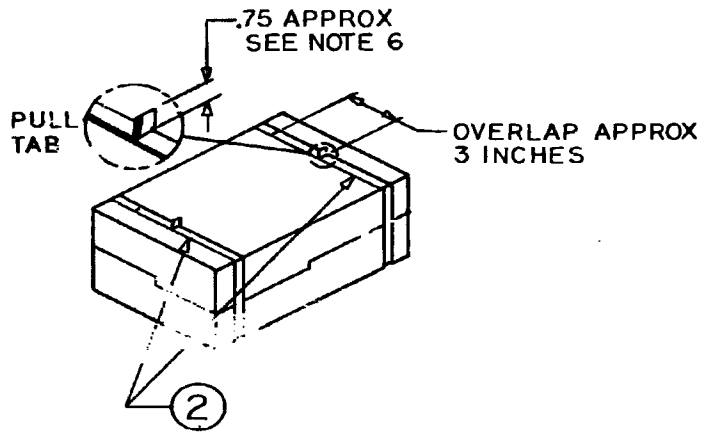

CLOSURE VIEW

5-15-6568_81361_-_F_0001_0001_U_N
March 31, 2000 7:52 AM

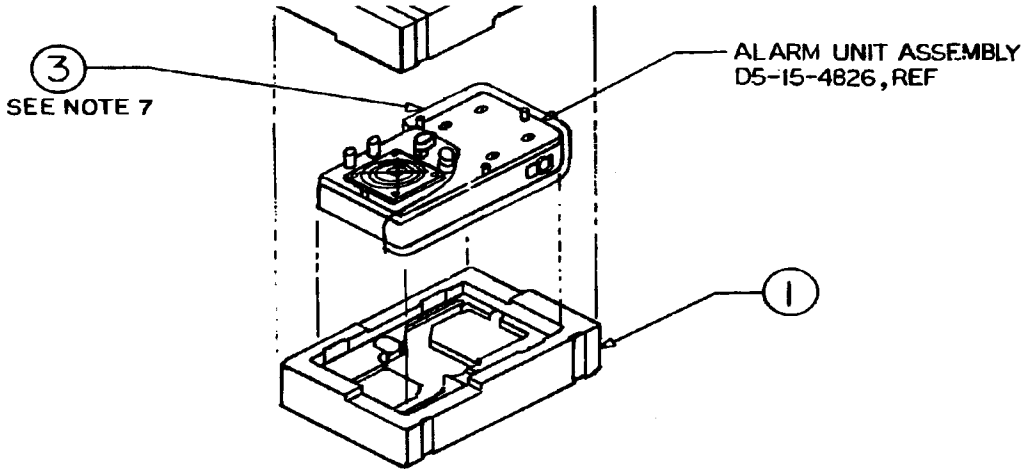

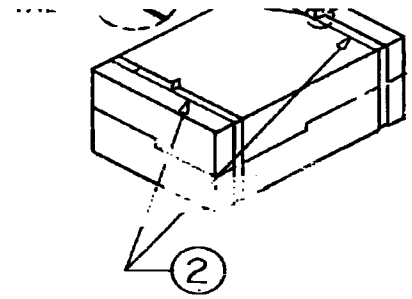

CLOSURE VIEW

NOTES:

1. THIS DRAWING SHALL BE INTERPRETED IN ACCORDANCE WITH APPLICABLE STANDARDS LISTED IN MIL SPEC DOD-D-1000.
2. THE FOLLOWING ARE MANDATORY WHEN INDICATED BY ■
   - ☐ REMOVE BURRS ☐ BREAK SHARP EDGES .010 MAX
   - ☐ FILLETS .010 MAX R.
   - ☐ ***V ALL OVER, EXCEPT AS NOTED
   - ☐ DIMENSIONS APPLY AFTER PLATING
   - ■ TOLERANCES ON STOCK MATERIAL SIZES, SHALL BE AS SPECIFIED IN APPLICABLE SPECIFICATIONS.
3. UNIT PACK ASSEMBLY SHALL BE MARKED IN ACCORDANCE WITH MIL-STD-129 (INTERIOR UNIT PACK MARKINGS).
4. PRIOR TO ASSEMBLY OF UNIT PACK MAKE SURE BATTERY RETAINER ASSEMBLY, TOP PANEL ASSEMBLY AND LAMP ASSEMBLY ARE PROPERLY SECURED.
5. CLOSURE OF ITEM 1 SHALL BE AS SHOWN IN CLOSURE VIEW.
6. END OF ITEM 2 SHALL BE OVERLAPPED TO FORM A PULL TAB AS SHOWN.

QTY REQD	DRAWING OR PART NO.	NOMENCLATURE	MATERIAL
1		BAG. TYPE I. STYLE I. .004 IN. THICK MATERIAL. SIZE 9 WIDE X 3 1/2 HIGH X 11 INCHES LONG	
2		TAPE, .50 WIDTH x 29 APPROX LONG, TYPE II, CLASS A OR TYPE III	
2	D5-15-8754	OVERPACK ALARM UNIT, CHEMICAL AGENT, AUTOMATIC ALARM M42	

LIST OF MATERIALS

APPLICATION	NEXT ASSY
D5-15-6576	D5-15-6568
D5-15-6578	D5-15-6566
D5-15-6580	D5-15-6570
D5-15-6581	D5-15-6572
D5-15-6581	D5-15-6574
SPI-P5-15-4826	D5-15-6575

END ITEM CODE NO.	
399	
402	
207	

UNLESS OTHERWISE SPECIFIED
DIMENSIONS ARE IN INCHES
TOLERANCES ON:
2 PLACE DECIMALS ± .04
3 PLACE DECIMALS ± .030
FRACTIONS ± 1/16
ANGLES ± 0°30'

MATERIAL

GENERAL DATE OF DRAWING: 1 MARCH 1972
DRAFTSMAN: JCM
CHECKER
QA LEADER
SUBMITTED: James Alsop
APPROVED BY ORDER OF CO: Joseph R. Kammer
Albert E. Olesevy

U.S. ARMY ARMAMENT RESEA
CHEMICAL SYST
ABERDEEN PROVING G

UNIT PACKIN
UNIT ABCA -

CODE IDENT NO. 81361
SIZE C
C5-
SCALE —

BRUNING 44-511 25278-1

5-15-6568_81361_-_F_0001_0001_U_N
March 31, 2000 7:52 AM

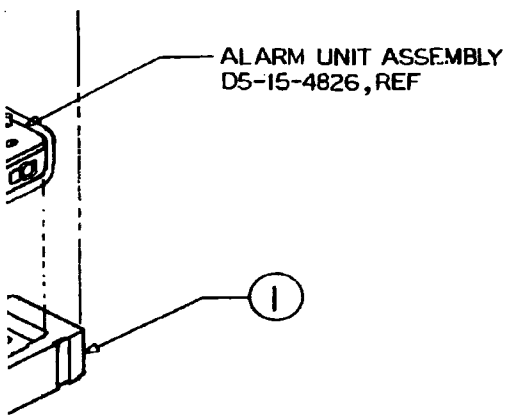

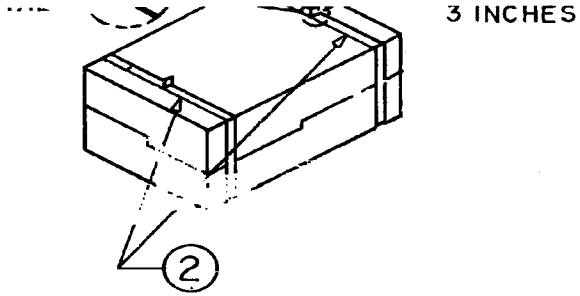

QTY REQD	DRAWING OR PART NO.	NOMENCLATURE	MATERIAL	SPECIFICATION	ITEM NO.
1		BAG, TYPE I, STYLE I, .004 IN. THICK MATERIAL, SIZE 9 WIDE X 3 1/2 HIGH X 11 INCHES LONG		PPP-B-26	3
2		TAPE, .50 WIDTH x 29 APPROX LONG, TYPE II, CLASS A, OR TYPE III		PPP-T-97	2
2	D5-15-8754	OVERPACK ALARM UNIT, CHEMICAL AGENT, AUTOMATIC ALARM M42			1

LIST OF MATERIALS

DANCE WITH
TTERY RETAINER
BLY ARE
NE VIEW.
'ULL TAB AS

APPLICATION	
NEXT ASSY	
~~D5-15-6568~~	~~D5-15-6568~~
~~D5-15-6569~~	~~D5-15-6569~~
~~D5-15-6570~~	~~D5-15-6570~~
~~D5-15-6571~~	~~D5-15-6571~~
~~D5-15-6572~~	~~D5-15-6572~~
SPI-P5-15-4826	~~D5-15-6573~~

END ITEM CODE NO.	
399	
402	
207	

UNLESS OTHERWISE SPECIFIED
DIMENSIONS ARE IN INCHES
TOLERANCES ON:
2 PLACE DECIMALS ± .04
3 PLACE DECIMALS ± .030
FRACTIONS ± 1/16
ANGLES ± 0°30'

MATERIAL

ORIGINAL DATE OF DRAWING: 1 MARCH 1972
DRAFTSMAN: JCM
CHECKED: JPA
GS LEADER:
DESIGNED: James Alsop
Joseph R. Kammer
APPROVED BY ORDER OF CO: Albert E. Sherry

U.S. ARMY ARMAMENT RESEARCH AND DEVELOPMENT COMMAND
CHEMICAL SYSTEMS LABORATORY
ABERDEEN PROVING GROUND, MARYLAND, 21010

UNIT PACKING OF ALARM UNIT ABCA -M42

CODE IDENT NO. 81361 | SIZE C | C5-15-6568
SCALE — | SHEET