PICATINNY ARSENAL, NEW JERSEY 07806-5000

PARTS LIST : PL-19200-9341015
DOCUMENT NUMBER : F 19200-9341015
NOMENCLATURE : DOUBLE TARGET ARM ASSEMBLY TARGET MECHANISM
CHANGE CONTROL NO.: H8I4004

REVISION SYMBOL: G
REVISION DATE : 01/28/99
ORIGINAL DATE : 02/11/85

AUTHENTICATION- Howard Lin

FIND NUMBER	QTY REQD	CAGE	PART/IDENTIFYING NUMBER	DRAWING SIZE	DRAWING/DOCUMENT NUMBER	NOMENCLATURE OR DOCUMENT TITLE	SUP LIST
1	0001	19200	9341018	F	9341018	TARGET ARM,DOUBLE-DOUBLE TARGET ARM ASSY	X
2	0001	19200	9341016	D	9341016	HIT SENSOR ELECTRONICS	X
3	0008	96906	MS35489-69	A	MS35489	GROMMET, RUBBER, HOT OIL AND COOLANT RESISTANT	
4	0008	10060	NAS43-DD4-28	A	NAS43	SPACERS SCREW AND BOLT	
5	0006	96906	MS16996-24	A	MS16996	SCREW, HEX HD, .250-28UNF-3A X 1.00 LG	
6	0020	96906	MS16212-11	A	MS16212	WASHERS, FLAT, METAL, ROUND, MEDIUM SERIES,NONMAGNETIC	
7	0010	96906	MS21083-C4	A	MS21083	NUT,SELF LOCKING,HEXAGON,NON METALLIC INSERT,250F	
9	0005	96906	MS16996-11	A	MS16996	SCREW, SCE, .190-32UNF-3A X .63 LG	
10	0005	96906	MS21083-C3	A	MS21083	NUT,SELF LOCKING,HEXAGON,NON METALLIC INSERT,250F	
11	0009	81352	AN960-C10	A	AN960	WASHER,FLAT	
13	0002	96906	MS35489-31	A	MS35489	GROMMET, RUBBER, HOT OIL AND COOLANT RESISTANT	
14	0002	19200	11829357	C	11829357	PLATE, BASE HIT SENSOR	
15	0002	19200	11829358	C	11829358	SPACER, ISOLATION, HIT SENSOR	
16	0002	19200	9363052	C	9363052	CLAMP ASSEMBLY	X
17	0002	19200	11829355	C	11829355	WASHER, RUBBER HIT SENSOR ELECTRONICS	
18	0004	96906	MS35338-139	A	MS35338	WASHER,LOCK-SPRING,HELICAL,REGULAR (MEDIUM)SERIES	
19	0004	96906	MS16996-21	A	MS16996	SCREW, SCH, .250-28UNF-3A X .50 LG	
20	0001	96906	MS25281-R4	A	MS25281	CLAMP, LOOP, WIRE SUPPORT	
21	0006	96906	MS21333-97	A	MS21333	CLAMP, LOOP-STEEL-PLAIN AND CUSHIONED	
23	0002	96906	MS16996-25	A	MS16996	SCREW, SCH, .250-28UNF-3A X 1.25 LG	
24	0001	19200	11829282	C	11829282	TARGET HUB	X
25	0006	81352	AN960-C416L	A	AN960	WASHER,FLAT	

QTY REQD: AR - AS REQUIRED ALT - ALTERNATE, OPT - OPTIONAL, SO - SELECTION OPTIONAL

PICATINNY ARSENAL, NEW JERSEY 07806-5000

PARTS LIST : PL-19200-9341015
DOCUMENT NUMBER : F 19200-9341015
NOMENCLATURE : DOUBLE TARGET ARM ASSEMBLY TARGET MECHANISM
CHANGE CONTROL NO.: H8I4004

REVISION SYMBOL: G
REVISION DATE : 01/28/99
ORIGINAL DATE : 02/11/85

FIND NUMBER	QTY REQD	CAGE	PART/IDENTIFYING NUMBER	DRAWING SIZE	DRAWING/DOCUMENT NUMBER	NOMENCLATURE OR DOCUMENT TITLE	SUP LIST
26	0002	96906	MS16996-23	A	MS16996	SCREW, SCE, .250-28UNF-3A X .75 LG	
27	0002	19200	9363060	D	9363060	SHIELD ASSY, HIT SENSOR	
28	0002	19200	9363051	C	9363051	SPACER - CLAMP ASSEMBLY	

TOTAL PAGES TO PARTS LIST: 2

QTY REQD: AR - AS REQUIRED ALT - ALTERNATE, OPT - OPTIONAL, SO - SELECTION OPTIONAL

DRAWING SIZE F
(ARRADCOM 79-12)

REVISIONS			
SYM	DESCRIPTION	DATE	APPROVAL
A	REDRAWN WITH CHANGES, INC. ECO RETS-0889, RETS-1162	85-01-25	
–	PROD RELEASE ERR F5X5000	85-02-11	
B	INC NOR F515199 85-04-20 ECP F515199 85-04-20 ECP F515396 85-06-27 ECP F514930 85-08-30	86-06-04	
C	INC NOR F614938 86-06-05 (ECP F614422 86-07-01)	87-03-23	
D	INC NOR D714332 87-04-29	87-07-14	
E	INC NOR D214020 92-05-22	93-01-19	
F	INC NOR D213011 92-03-17 (ECP D213024 92-07-21)	95-04-13	
G	NOR H814004/981230	990128	DR

NOTES:

1. QAP 9341015 APPLIES TO THIS DRAWING.
2. KNIFE CUT REQUIRED PRIOR TO ASSEMBLY TO ENABLE GROMMET TO BE PLACED AROUND CABLE.
3. SPECS MIL-F-13926 AND ANSI Y14.5-1973 APPLY.
4. ITEM 11785557 IS SHIPPED WITH ASSEMBLY 11829340-2.
5. ITEM 11785557 IS USED TO REPLACE THE NORMAL RIGHT AND LEFT HAND MOUNTING BRACKET HARDWARE USING EXISTING FASTENERS.

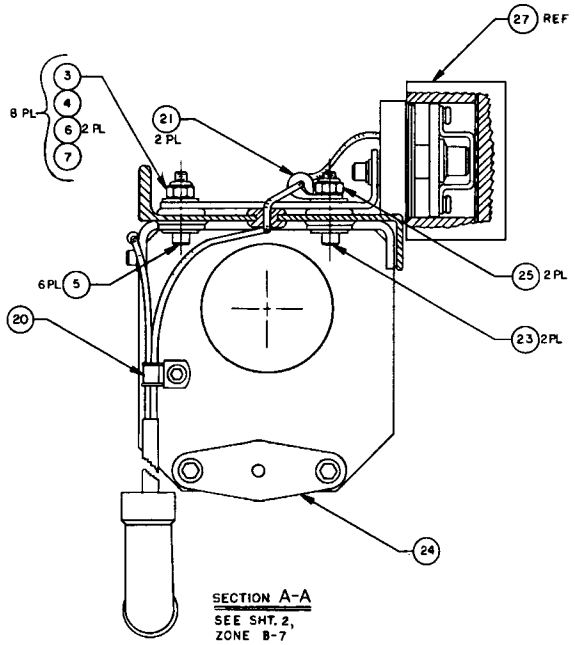

SECTION A-A
SEE SHT. 2, ZONE B-7

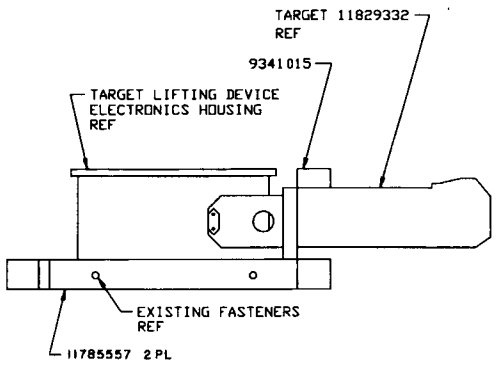

TYPICAL INSTALLATION
REF

SCALE: NONE

SEE SEPARATE PARTS LIST

11829340-2	RETS		
NEXT ASSY	USED ON		
APPLICATION			

MECHANICAL PROPERTIES: VP, TS, EL2, RA, BH, BH

DO NOT SCALE DRAWING
UNLESS OTHERWISE SPECIFIED DIMENSIONS ARE IN INCHES
TOLERANCES ON DECIMALS ± ——
FRACTIONS ± —— ANGLES ± ——

ORIGINAL DATE OF DRAWING 82-09-06
DRAFTSMAN E. CZACH; CHECKER D. PUTNEY; ENGR; ENGR; ENGR; ENGR; CHIEF ENGR; A.J. FIESTOCK 1/18/82; H. BRAUN 1-14-82

PART NO. 9341015

U S ARMY ARMAMENT RESEARCH AND DEVELOPMENT COMMAND
DOVER, NEW JERSEY 07801

DOUBLE TARGET ARM ASSY

SIZE	CODE IDENT NO.	
F	19200	9341015

SCALE 1/1 UNIT WT. SHEET 1 OF 2

REV	REV STATUS OF SHEETS
E G	
2 1	SHEET

DISTRIBUTION STATEMENT A.
APPROVED FOR PUBLIC RELEASE; DISTRIBUTION IS UNLIMITED.

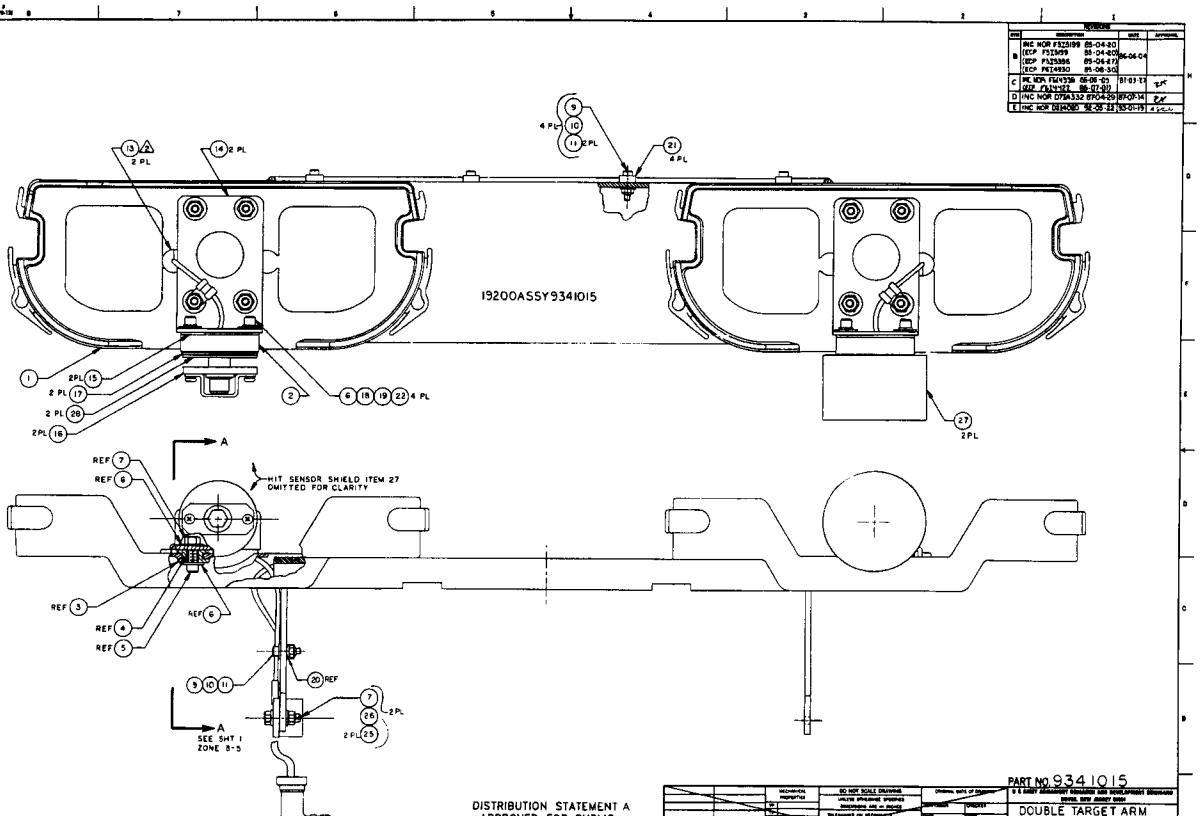
19200ASSY9341015
HIT SENSOR SHIELD ITEM 27 OMITTED FOR CLARITY
SEE SHT 1 ZONE B-5
DISTRIBUTION STATEMENT A APPROVED FOR PUBLIC RELEASE; DISTRIBUTION IS UNLIMITED.
PART NO 9341015
DOUBLE TARGET ARM ASSY
19200
9341015

Double Target Arm (DTA)

DAAE20-00-R-0127

Price Evaluation Spreadsheet
Minimum Guaranteed Quantity: 108

(To be awarded in Pricing Period 1)

		Pricing Period 1				Pricing Period 2		Pricing Period 3		
	Order Qty	Unit Price With First Article	Wgt	Unit Price Without First Article	Wgt	Unit Price	Wgt	Unit Price	Wgt	CLIN Totals
CLIN 0001	50 - 99		10%		10%		10%		10%	
Double Target Arm (DTA)	100 - 149		60%		30%		10%		10%	
NSN: 6920-01-158-2234	150 - 199		20%		50%		30%		30%	
	200 - 300		10%		10%		50%		50%	
			100%		100%		100%		100%	
Weighted Unit Price				-		-		-		
Estimated Total Quantity				273		200		200		
Evaluated Price				-		-		-		
Evaluated CLIN Price										-