11/8/99

11/22 LRG - 28738

REQUEST FOR QUOTATION
(This is NOT an Order)

This RFQ [X] is [ ] is not a small business set-aside

Page 1 Of 21

1. Request No.	2. Date Issued	3. Requisition/Purchase Request No.	4. Cert For Nat Def. Under BDSA Reg. 2 and/or DMS Reg. 1	Rating
DAAE20-99-T-0195	1999OCT21	See Schedule		DOA5

5A. Issued By
TACOM-ROCK ISLAND W52H09
AMSTA-LC-CFA-A
ROCK ISLAND IL 61299-7630

6. Deliver by (Date)
See Schedule

7. Delivery
[ ] FOB Destination [X] Other

5B. For Information Call: (Name and telephone no.) (No collect calls)
NANCY OAKES (309) 782-7168
EMAIL: OAKESN@RIA.ARMY.MIL

8. To: Name and Address, Including Zip Code

LRG CORPORATION
210 Magee Avenue
Jeannette, PA 15644-2136

9. Destination (Consignee and address, including Zip Code)

See Schedule

10. Please Furnish Quotations to the Issuing Office in Block 5A On or Before Close of Business (Date) 22-NOV-99

IMPORTANT: This is a request for information, and quotations furnished are not offers. If you are unable to quote, please indicate on this form and return it to the address in Block 5B. This request does not commit the Government to pay any costs incurred in the preparation of the submission of this quotation or to contract for supplies or services. Supplies are of domestic origin unless otherwise indicated by quoter. Any interpretations and/or certifications attached to this Request for Quotation must be completed by the quoter.

11. Schedule (Include applicable Federal, State, and local taxes)

Item Number (a)	Supplies/Services (b)	Quantity (c)	Unit (d)	Unit Price (e)	Amount (f)
	Remittance Address: LRG CORPORATION PO BOX 490 JEANNETTE PA 15644-0490 (See Schedule)				

12. Discount For Prompt Payment	a. 10 Calendar Days %	b. 20 Calendar Days %	c. 30 Calendar Days %	d. Calendar Days Number	Percentage

NOTE: Additional provisions and representations [ ] are [ ] are not attached.

13. Name and Address of Quoter (Street, City, County, State and Zip Code)

LRG CORPORATION
210 MAGEE AVENUE
JEANNETTE PA 15644-2136
WESTMORELAND COUNTY

14. Signature of Person Authorized to Sign Quotation
Lewis R. Gainfort

15. Date of Quotation
29 NOV 99

16. Signer

a. Name (Type or Print) Lewis R. Gainfort

b. Telephone Area Code 724 Number 523-3131

c. Title (Type or Print) Sales Manager

AUTHORIZED FOR LOCAL REPRODUCTION
PREVIOUS EDITIONS NOT USABLE

18-118

Standard Form 18 (Rev. 8-95)
Prescribed by GSA-FAR (43 CFR) 53.215-1(a)

11/5
DWSS Req

CONTINUATION SHEET	Reference No. of Document Being Continued PIIN/SIIN DAAE20-99-T-0185 MOD/AMD	Page 6 of 31

Name of Offeror or Contractor: LRG Corporation

ITEM NO	SUPPLIES/SERVICES	QUANTITY	UNIT	UNIT PRICE	AMOUNT
	SECTION B - SUPPLIES OR SERVICES AND PRICES/COSTS				
0001	Supplies or Services and Prices/Costs				
0001AA	PRODUCTION QUANTITY	20	EA	$ 2450.00	$ 49000.00
	NSN: 5120-01-247-4000 NOUN: ACTUATOR,LINEAR,WOR FSCM: 19200 PART NR: 12009294 SECURITY CLASS: Unclassified PRON: M191F070M1 PRON AMD: 01 AMS CD: 070031GGPB8				
	Packaging and Marking				
	Inspection and Acceptance INSPECTION: Origin ACCEPTANCE: Origin				
	Deliveries or Performance DOC REL CD / MILSTRIP / SUPPL ADDR / SIC CD / MARK FOR / TP CD 001 W52H099158H978 W25G1U J 2 DEL REL CD / QUANTITY / DAYS AFTER AWARD 001 20 0181				
	FOB POINT: Destination				
	SHIP TO: FREIGHT ADDRESS (W25G1U) TRANSPORTATION OFFICER NEW CUMBERLAND ARMY DEPOT ATTN: SDSNC-TT NEW CUMBERLAND PA 17070-5001				
0002	Supplies or Services and Prices/Costs				
	1423				
	SECURITY CLASS: Unclassified Contractor will prepare and deliver the technical data in accordance with the requirements, quantities and schedules set forth in the Contract Data Requirements Lists (DD Form 1423), Exhibit A. A DD 250 IS NOT REQUIRED. (End of narrative B001)				
	Inspection and Acceptance INSPECTION: Destination ACCEPTANCE: Destination				

"LRG CORPORATION QUOTE BASED ON SUPPLYING ALTERNATE TEMPLETON KENLY & COMPANY ACTUATOR J5/UP/15/TRNS/5.33:1 PER ENCLOSED FAX DRAWING IN LIEU OF DRAWING 12009294 AND PAINTED TO AVAILABLE EQUAL PAINT IN LIEU OF DRAWING NOTE J. THIS PART IS CURRENT REPLACEMENT OF OLD P/N 2515815, REV.C."

NOTES

1) THE EMERGENCY STOP NUT IS INTENDED FOR USE AS A SECONDARY STOP FOR OVER TRAVEL EMERGENCIES ONLY.
2) LOAD SCREW MUST BE PREVENTED FROM ROTATION BY OTHERS TO PRODUCE TRAVEL.
3) DIMENSIONS ARE NOMINAL IN INCHES. CONSULT FACTORY FOR TOLERANCES AS REQUIRED.
4) INPUT TORQUE VARIES WITH APPLIED LOAD AND SPEED. FOR RUNNING TORQUE SEE CATALOG.
5) MAXIMUM PERMISSIBLE COMPRESSIVE LOAD CAPACITY MUST BE CALCULATED FOR EACH APPLICATION, SEE CATALOG.
6) SUPPLY UNIT UNPAINTED

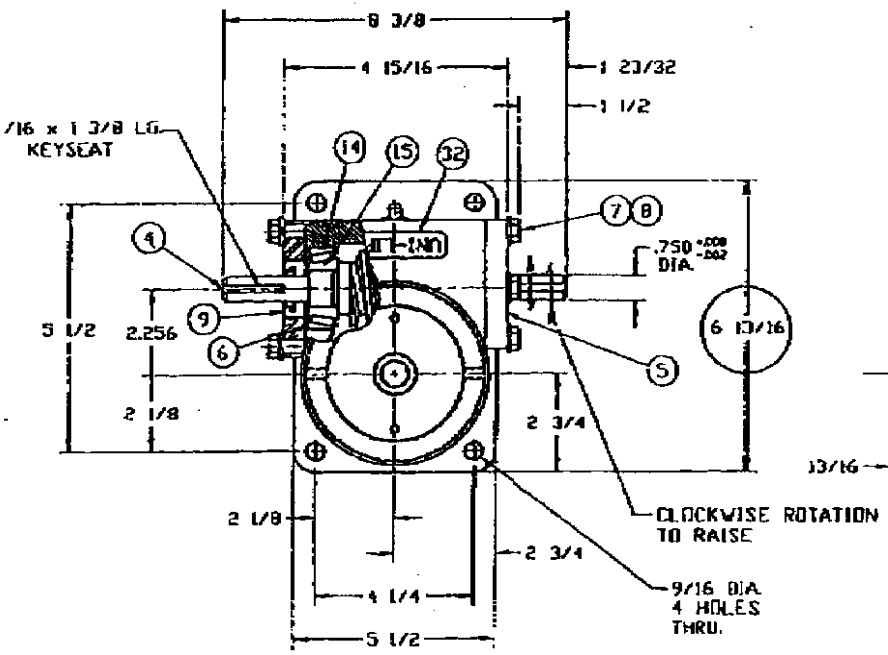

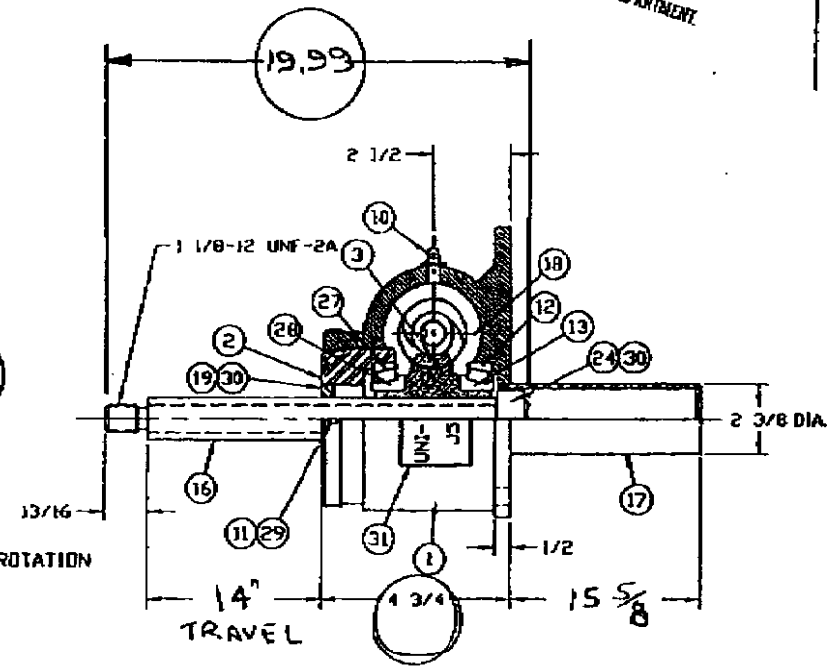

TEMPLETON, KENLY & CO.
BROADVIEW, ILLINOIS
NOV
ENGINEERING DEPARTMENT

SPECIFICATIONS

ATED CAPACITY-----5 TON (TENSION LOAD ONLY)
TATIC TORQUE------424 LB-IN.
EAR RATIO---------5 1/3:1
URNS/IN. ---------16

RENOVE BURRS AND SHARP EDGES

PROPRIETARY ITEM
NOTICE TO ALL PERSONS RECEIVING THIS DRAWING
Receipt of this drawing agrees that this drawing is only conditionally issued, and neither except for permission thereof confers or transfers any right to or license to use the subject matter of this drawing or any design or technical information shown thereon or any right to reproduce this drawing or any part thereof, and recipient will not use or reproduce, except by written permission from TEMPLETON, KENLY & CO. INC.

TOLERANCES UNLESS OTHERWISE SPECIFIED
FRACTIONS ± 1/64
.X ± 0.030
.XX ± 0.010
.XXX ± 0.005
SURF. FIN. 125
ANGLES ± 1/2°
ALL DIMENSIONS IN INCHES UNLESS OTHERWISE SPECIFIED

PRO. REL. ECN (999)

TEMPLETON, KENLY & CO. INC.
2525 S. GARDNER ROAD
BROADVIEW, IL 60153

DRAWN RP	2/28/95	SCALE XXX	TITLE J5/UP/TRNS ESN/5 1/3:1
CHECKED			
APPROVED			SIZE B
MATERIAL			CONTROL NUMBER

J5/UP/15/TRNS/5.33:1/ESN w/o PAINT
CURRENT PRODUCTION

DOCUMENT SUMMARY LIST

Item: LINEAR ACTUATOR
NSN: 5120-01-247-4000
Control Number/PRON: P49FFAX4DSL

Identifies all first tier documents (cited in SOW) (applicable DIDs). Also included are all referenced documents (2nd, (includes DID block 10 references), 3rd and lower tier) which have been tailored.

DOCUMENT CATEGORY:

CATEGORY O - Unless otherwise specified in the solicitation, contract, or contract modifications, all documents are for guidance and information only.

CATEGORY 1 - The requirements contained in the directly cited document are contractually applicable to the extent specified. All referenced documents are for guidance and information only.

CATEGORY 2 - The requirements contained in the directly cited document and the reference documents identified in the directly cited document are contractually applicable to the extent specified. All subsequently referenced documents are for guidance and information only.

CATEGORY 3 - Unless otherwise specified in the solicitation, contract or contract modification, all requirements contained in the directly cited document and all reference and subsequently referenced documents are contractually applicable to the extent specified.

Document Number (Contract Reference) Applicable Tailoring	Document Title	Document Date/ Document Category
1a. MIL-STD-2549 Table DIP 4-1	Configuration Management Data Interface	30 Jun 97 Cat 2
1b. DI-CMAN-81554 *(seq A001)*	Configuration Change Control *Data Information Packet*	30 Jun 97 *Cat 2*
2. ANSI/ISO/ASQC Q9003 or equivalent	Quality Systems-Model for Quality Assurance in Final Inspection and Test	18 Jul 94

CONTRACT DATA REQUIREMENTS LIST
DD FORM 1423 (MECHANIZED)

CATEGORY: MISC SYSTEM/ITEM: LINEAR ACTUATOR
TO CONTRACT/PR: P49FFAX4

1. SEQUENCE NUMBER
14. DISTRIBUTION — DRFT/REG/REPRO COPIES
2. TITLE OF DATA ITEM
3. SUBTITLE
4. DATA ITEM NUMBER
5. CONTRACT REFERENCE
6. TECHNICAL OFFICE 7. DD 250 8. APP CODE 9. DIST STATEMENT REQUIRED
10. FREQUENCY 11. AS OF DATE 15. TOTAL:
12. DATE OF 1ST SUBMISSION 13. DATE OF SUBSEQUENT SUBMISSION
16. REMARKS

---

1. A001

14. AMSTA-AR-ES (ECALS) / / / /

2. CONFIGURATION CHANGE CONTROL*
3. ENGINEERING ACTIONS

4. DI-CMAN-81554

5. SECTION C

6. AMSTA-AR-ES 7. NO 8. - 9. **

10. ASREQ 11. --- 15. TOTAL 0/ 0/ 0

12. ASREQ 13. ASREQ

16. REMARKS
PREPARE ENGINEERING ACTIONS IAW DI-CMAN-81544 AND SUBMIT ELECTRONICALLY VIA ECALS WORLDWIDE WEB PAGE HTTP://EDMD4.PICA.ARMY.MIL/.*DATA INFORMATION PACKET **DISTRIBUTION STATEMENT WILL BE ASSIGNED AND IMPLEMENTED BY THE DOD CONFIGURATION MANAGER.THE POC FOR ECALS IS LEE SADAUSKAS,AMSTA-AR-QAW,(973)724-6626 LEES@PICA.ARMY.MIL.

Stephen J Hansen

APPROVED BY: STEPHEN J HANSEN, SDMO, AMSTA-AR-QAD DATE: 05/10/1999