Appendix D
MILES INTERFACES

MILES LTID Interface

1. Mechanical Interface

The interface cable or device must connect between the LTID connector, part number 12629880-2 or equivalent (See Figure 1) and the target device. For stationary targets the cable length shall be sufficient to allow the LTID to be placed near the lifting mechanism. For moving targets, the cable length shall be sufficient to allow the LTID to be mounted on the mover.

2. Electrical Interface

The voltage at pin A of LTID connector J2 is 7.0 to 14.0 volts DC (depending on the condition of the LTID battery) relative to the connector shell and LTID enclosure. With a 100 ohm or greater load connected between pins A and B and no detected MILES transmission, the voltage at pin B shall be not more than 0.5 volts less than the voltage at pin A. When a hit occurs, a negative going pulse having a (low level) amplitude of 1.0 volt maximum and a pulse width of 70 ms ± 20% shall occur at pin B. Any pulse within this range or greater must be interpreted as a hit by the lifting mechanism. Any pulse less than 50 ms must not be interpreted as a hit.

MILES Transmitter Interface.

1. Mechanical Interface

The MSD shall provide a physical interface that mates with the bottom (see View B-B) of the MILES transmitter as defined on drawing 9359202 (Figures 2-5) and securely holds it in place using the four .138 diameter threaded holes shown on View B-B. (The two 0.095 holes on View B-B are intended for accepting alignment pins. The pins are optional for the interface.)

A cable which connects to the MILES transmitter connector, P/N 9359174 or equivalent (see Figure 6 for physical description, Figure 7 for source information), shall be included as part of the MSD. The cable length shall be suitable for connection to a MILES transmitter mounted on the MSD and allow full slewing of the transmitter over the angles specified in the performance description. A typical mating connector for cable use is described on drawing 9359218 (Figures 8 and 9).

2. Electrical Interface

When the MILES transmitter is to be activated (via command from the RCS or target mechanism) the MSD shall provide a low resistance path between pins 6 (+) and 3 (-) of the transmitter connector such that the voltage between the pins is less than 0.5 volts with 10 volts at 1 ma (current limited) applied. In the off state, the resistance

ATTACHMENT 024

between the pins shall be greater than 1 M ohm at applied voltages up to 100 volts. Connector pin 1 is designated as the shield.

DRAWING SIZE D (ARRADCOMR 70-12)

REVISIONS			
SYM	DESCRIPTION	DATE	APPROVAL
XO			
	PRODUCTION RELEASE ERR F614051	87-08-11	WJK

NOTES: UNLESS OTHERWISE SPECIFIED

1. INTERPRET DRAWING PER DOD-STD-100.
2. IDENTIFICATION OF THE "SUGGESTED SOURCE(S) OF SUPPLY" HEREON IS NOT TO BE CONSTRUED AS A GUARANTEE OF PRESENT OR CONTINUED AVAILABILITY AS A SOURCE OF SUPPLY FOR THE ITEM(S).
3. CONNECTORS SHALL MEET THE REQUIREMENTS OF MIL-C-26482 AND MIL-STD-1669.
4. CONNECTORS SHALL BE SUPPLIED WITH PLASTIC PROTECTIVE DUST CAPS.
5. CONNECTORS SHALL BE LEGIBLY AND PERMANENTLY MARKED ON THE SHELL OR COUPLING RING IN ACCORDANCE WITH MIL-STD-1285.
6.

SUGGESTED SOURCE OF SUPPLY			
CONTROL NUMBER	CODE IDENT	PART NUMBER	NAME AND ADDRESS
12629880-1	77820	PT06A-8-3P(SR)	BENDIX CORP. 23185 LA CADENA DRIVE LAGUNA HILLS, CA.92653 (714) 855-4454
12629880-2		PT07A-8-3S	

7 O-RING TO BE SUPPLIED WITH CONNECTOR.

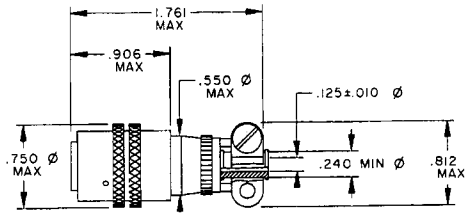

-1 PLUG

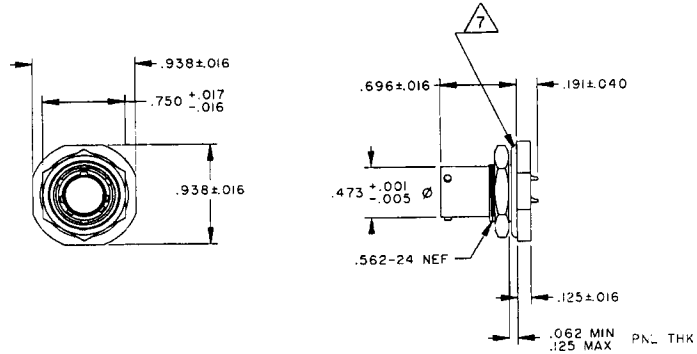

-2 RECEPTACLE

THIS DRAWING CONTAINS INFORMATION PROPRIETARY TO LORAL ELECTRO OPTICAL SYSTEMS INC. IT SHOULD NOT BE REPRODUCED, USED OR DISCLOSED TO ANYONE WITHOUT THE PRIOR WRITTEN PERMISSION OF THIS ORGANIZATION.

SPECIFICATION CONTROL DRAWING

PART NO. 12629880

NEXT ASSY	USED ON
12629863	
12629861	LTID

APPLICATION

MECHANICAL PROPERTIES: YP, TS, EL2, RA, BH, RH

DO NOT SCALE DRAWING
UNLESS OTHERWISE SPECIFIED DIMENSIONS ARE IN INCHES
TOLERANCES ON DECIMALS ±
FRACTIONS ± ANGLES ±
THIRD ANGLE PROJECTION

ORIGINAL DATE OF DRAWING 86-12-02
DRAFTSMAN S. FOATI
ENGR
ENGR
ENGR

U S ARMY ARMAMENT RESEARCH AND DEVELOPMENT COMMAND
DOVER, NEW JERSEY 07801

CONNECTOR

SIZE D | CODE IDENT NO. 19200 | 12629880

SCALE 2:1 | UNIT WT. | SHEET 1 OF 1

FIGURE 1

NOTES: UNLESS OTHERWISE SPECIFIED

1. INTERPRET DRAWING PER MIL-STD-100
2. DIMENSIONING AND TOLERANCING PER ANSI Y14.5-1973.
3. WORKMANSHIP STANDARDS PER MIL-STD-454, REQT. 9.
4. SCREW THREADS PER MIL-STD-454, REQT 12.
5. SEE SHEET 4 FOR DATUM/DRAFT INTERPRETATION.
6. REMOVE ALL BURRS AND SHARP EDGES.
7. MACHINED SURFACES TO BE 32 RMS EXCLUDING THREADS.
8. FILLET RADII .030 R MAX.
9. SPOTFACE DEPTH QUALIFIED TO .750 DIMENSION FROM -D-.
10. SPOTFACE DEPTH QUALIFIED TO 1.000 DIMENSION FROM -D-.
11. SPOTFACE DEPTH QUALIFIED TO .485 DIMENSION FROM -D-.
12. TOLERANCES: XX ±.03
    XXX ±.010
    ANGLES ±2°
13. BREAK INSIDE EDGE .015 MAX ALL AROUND.
14. FINISH: PAINT EXTERIOR AND INDICATED BORES IN SECTION C-C. USING PAINT PER 118360.3-2 (PAINT PROCESS EPOXY POWDER COLOR BLACK).
15. ALL DIMENSIONS APPLY BEFORE FINISH SPECIFIED IN NOTE 14.
16. APPLY MIL-S-46163, TYPE 3, GRADE R (SEALING COMPOUND) TO MS35914-306 (INSERT) BEFORE INSTALLATION.
17. INSTALL INSERTS PER MS35914 FLUSH OR BELOW SURFACE AFTER 14. DO NOT BREAK THRU HOUSING.
18. INSTALL INSERT PER MS 35914 FLUSH WITHIN .010 OF INDICATED SURFACE AFTER 14.
19. MARK CHARACTERS (10 POINT HELVETICA REGULAR OR EQUIV) USING INK PER MIL-I-43553-W, COLOR WHITE. CHARACTERS TO BE SYMMETRICALLY LOCATED ABOUT INDICATED RADIUS WITHIN ±.03. WIDTH OF LINES TO MATCH LINE WIDTH OF ASSOCIATED CHARACTERS.
20. IDENTIFY WITH PART NO 19200-9359202 PER MIL-STD-130 USING INK PER MIL-I-43553-B, COLOR BLACK. CHARACTERS TO BE LOCATED APPROXIMATELY AS SHOWN.
21. PART 9359202-101 IS MADE FROM 9359203.
22. 7.3.3 OF MIL-STD-171 (CHEM FILM) HOLES, CAVITIES, AND INDICATED SURFACES.
23. CAP 9359202 APPLIES.
24. FOR FIELD REPAIR PURPOSES 9353587 (TOOL, INSERT INSTALLATION) MAY BE USED TO INSTALL INSERTS INTO 9359202-101 (HOUSING).

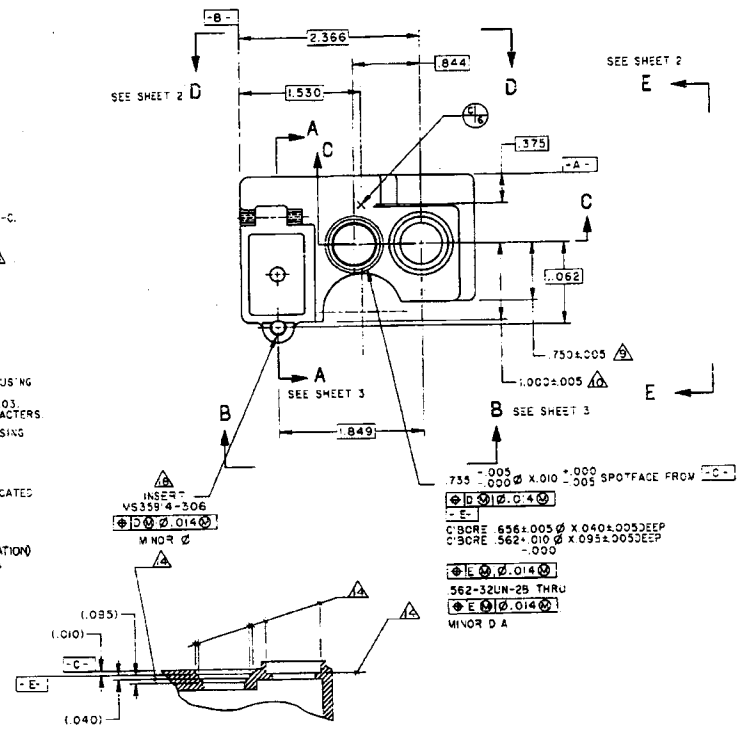

SECTION C-C
SCALE: NONE

STR	DESCRIPTION	DATE	APPROVAL
XJ	SEE DCN 06752	87-04-2[illegible]	RICHARDS
—	PRODUCTION RELEASE ERR F614059	87-05-13	LTO
A	NOR 0714583.87-10-07 (ECP 0614008.88-01-13) (ECP 0614017.88-02-03)	88-03-10	E YOUNG
B	NOR 0814123.88-10-12	88-11-09	[illegible]
C	NOR 0[illegible]4040 89-10-05	89-[illegible]	[illegible]
D	NOR 0[illegible]2019 90-04-11	89-[illegible]	[illegible]
E	NOR 0[illegible]4012 89-11-06	89-[illegible]	[illegible]

—	B	C	B	E
—	SH4	SH3	SH2	SH1
REVISION STATUS OF SHEETS				

SEE SEPARATE PARTS LIST

PART NO. 9359202

9359160	SAT		
NEXT ASSY	USED ON		
APPLICATION			

MECHANICAL PROPERTIES

DO NOT SCALE DRAWING
UNLESS OTHERWISE SPECIFIED
DIMENSIONS ARE IN INCHES
TOLERANCES ON DECIMALS ±
FRACT ± ANGLES ±
THIRD ANGLE PROJECTION

ORIGINAL DATE OF DRAWING 88-04-07
LEON ORTOVENICE
R.R. STICKLING

U.S. ARMY AVIATION RESEARCH AND DEVELOPMENT COMMAND
DOVER, NEW JERSEY 07801

HOUSING-SAT

SIZE	CODE IDENT NO.	9359202
F	19200	

SCALE 2/1 SHEET 1 OF 4

NO.SAT.9359202.NOR-B.SH1

FIGURE 2

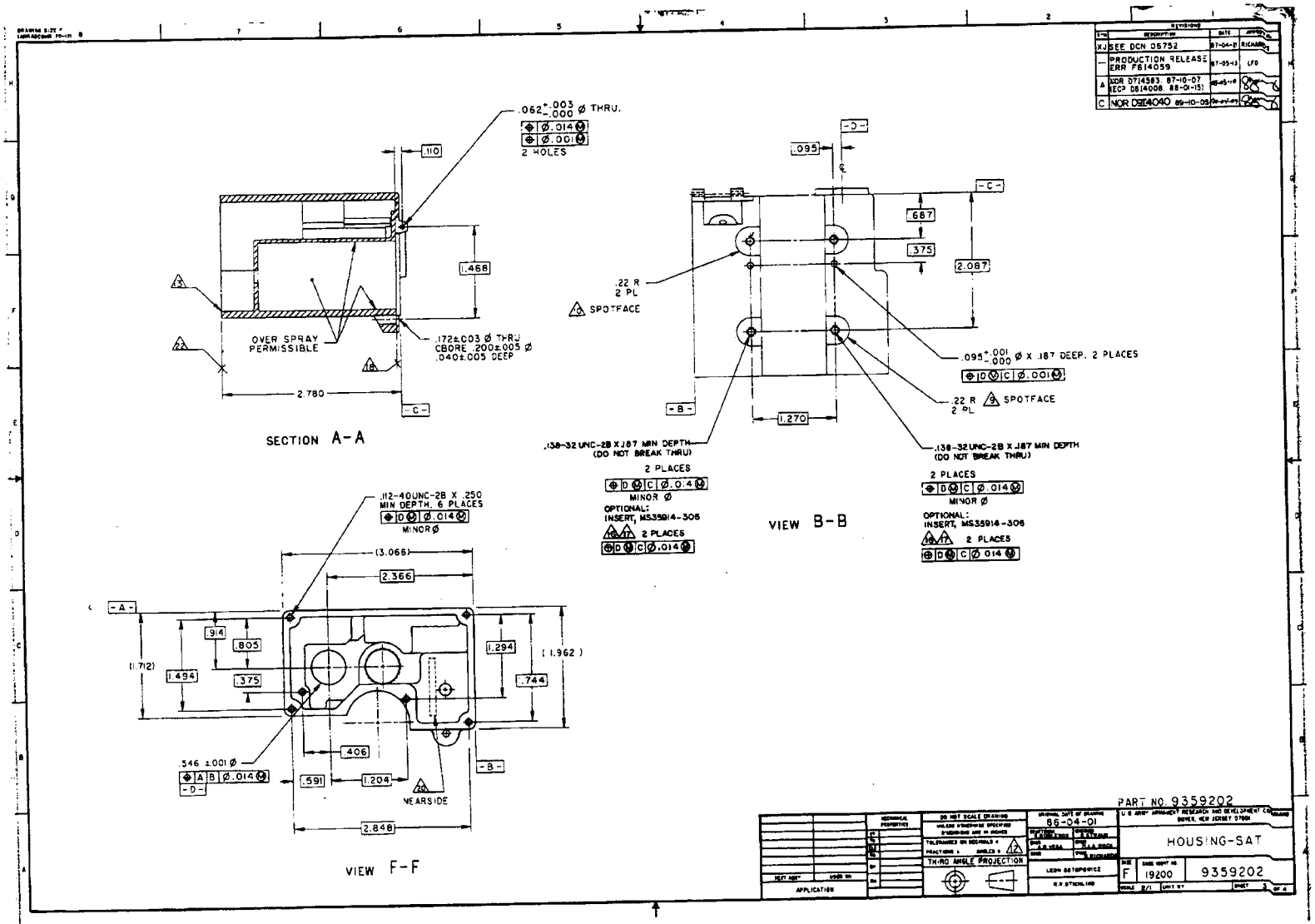

SECTION A-A
VIEW B-B
VIEW F-F
OVER SPRAY PERMISSIBLE
.062 +.003 -.000 Ø THRU.
2 HOLES
.172±.003 Ø THRU CBORE .200±.005 Ø .040±.005 DEEP
.22 R 2 PL
SPOTFACE
.095 +.001 -.000 Ø X .187 DEEP. 2 PLACES
.138-32 UNC-2B X .187 MIN DEPTH (DO NOT BREAK THRU)
2 PLACES
MINOR Ø
OPTIONAL: INSERT, MS35914-306
.112-40UNC-2B X .250 MIN DEPTH. 6 PLACES
.546 ±.001 Ø
NEARSIDE
PART NO. 9359202
HOUSING-SAT
19200
9359202
THIRD ANGLE PROJECTION
86-04-01

FIGURE 3

DRAWING SIZE F
(ARRADCOM 70-123) B

REVISIONS			
SYM	DESCRIPTION	DATE	APPROVAL
XJ	SEE DCN 06752	87-04-21	RICHARDS
—	PRODUCTION RELEASE ERR F614059	87-05-13	LFC
B	NOR 0814125.88-10-12	88-11-09	[illegible]

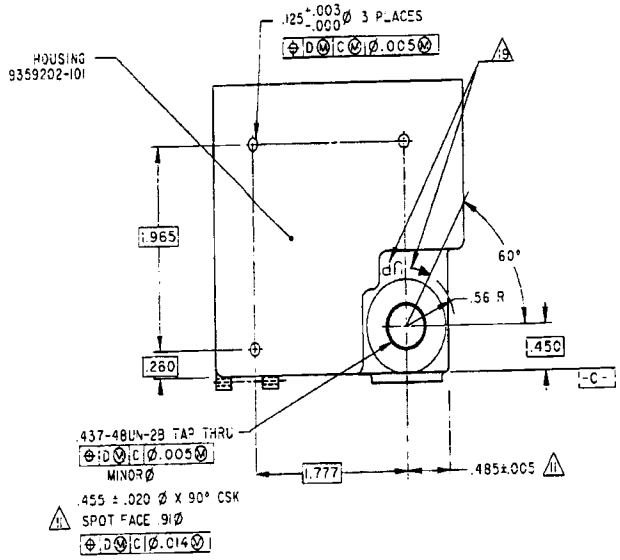

VIEW D-D

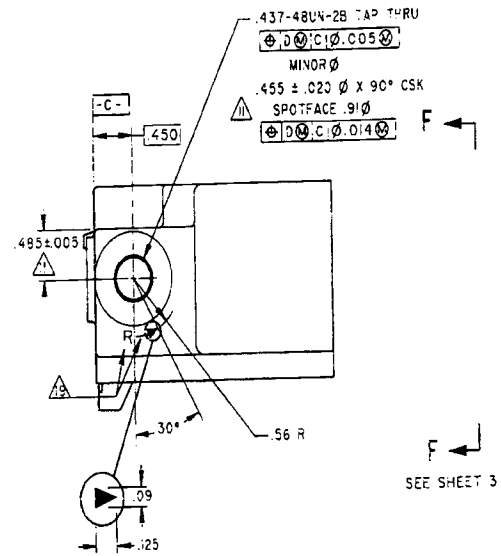

VIEW E-E

FIGURE 4

PART NO. 9359202

NEXT ASSY	USED ON	MECHANICAL PROPERTIES	DO NOT SCALE DRAWING UNLESS OTHERWISE SPECIFIED DIMENSIONS ARE IN INCHES	ORIGINAL DATE OF DRAWING 88-04-01
APPLICATION			TOLERANCES ON DECIMALS ± FRACTIONS ± ANGLES ±	THIRD ANGLE PROJECTION

DRAFTSMAN R. RUBLEVSKAI · CHECKED E. STRAUS · ENGR J.B. VEGA · ENGR E.L.B. ROCK · ENGR R. RICHARDS

LEDA 05 "OPSHEET"

R.R.STIRLING

U.S. ARMY ARMAMENT RESEARCH AND DEVELOPMENT COMMAND
DOVER, NEW JERSEY 07801

HOUSING - SAT

SIZE F · CODE IDENT NO. 19200 · 9359202

SCALE 2/1 · UNIT WT. · SHEET 2 OF

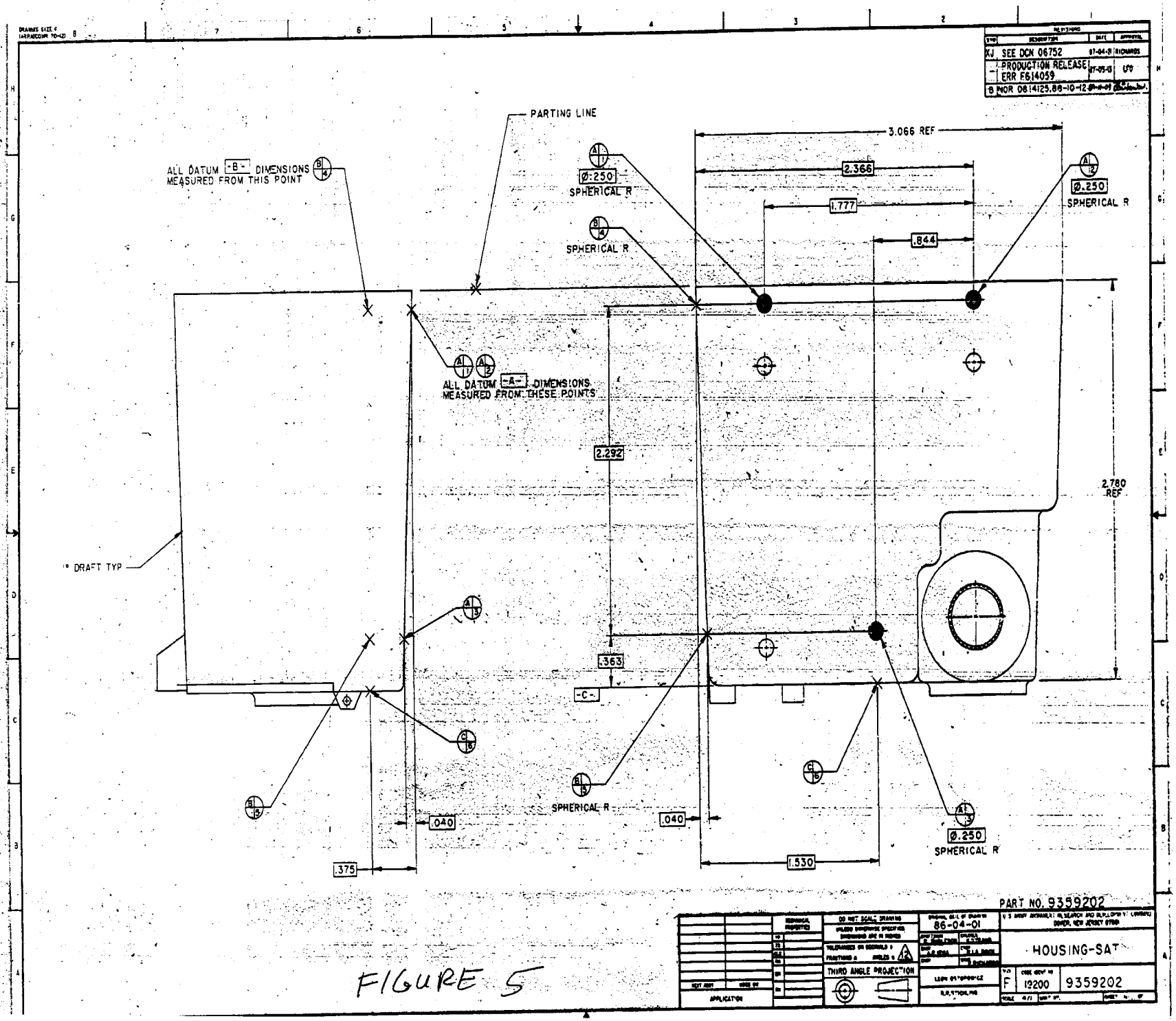

PARTING LINE
ALL DATUM -B- DIMENSIONS MEASURED FROM THIS POINT
ALL DATUM -A- DIMENSIONS MEASURED FROM THESE POINTS
3.066 REF
2.366
1.777
.844
Ø.250
SPHERICAL R
2.292
2.780 REF
.363
-C-
.040
.375
1.530
DRAFT TYP
PART NO. 9359202
HOUSING-SAT
86-04-01
THIRD ANGLE PROJECTION
F
12200
9359202

FIGURE 5

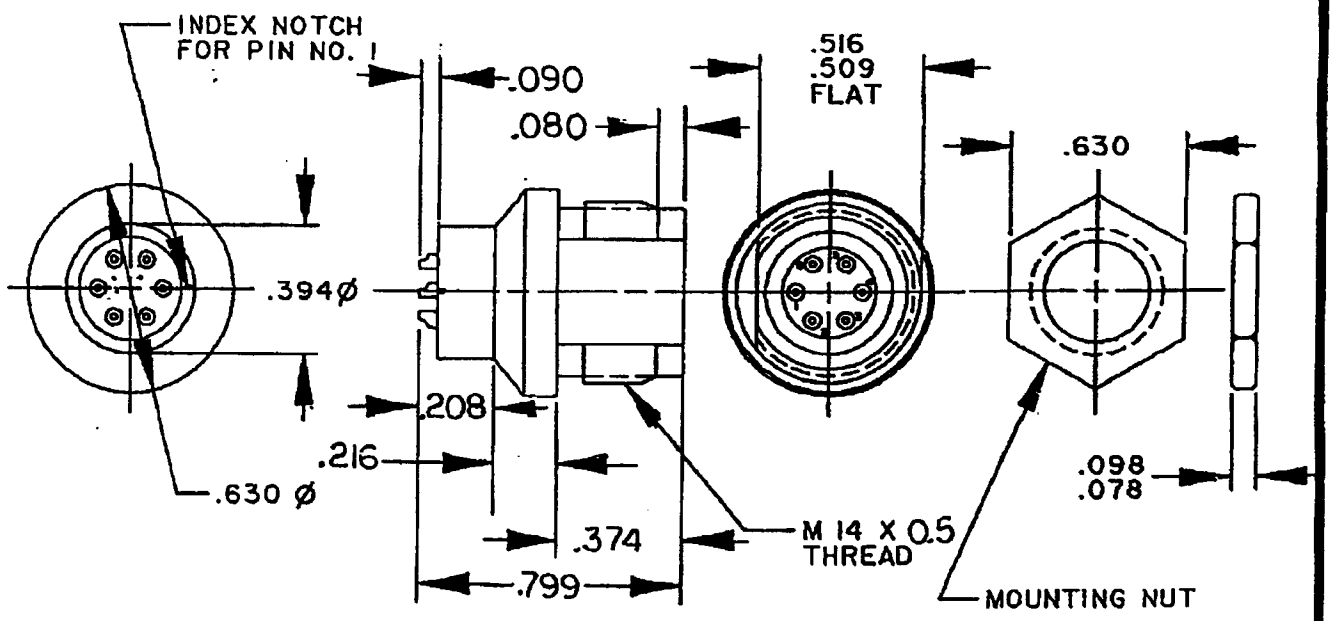

NOTES: UNLESS OTHERWISE SPECIFIED

1. ALL DIMENSIONS ARE MAXIMUM.
2. SOLDER CONTACTS MUST ACCEPT 26 AWG STRANDED COPPER WIRE.
3. DIMENSIONAL OUTLINE IN INCHES, SCREW THREADS METRIC.
4. DIMENSIONAL TOLERANCE ±.010.

FIGURE 6

FIGURE 1. PHYSICAL OUTLINE

TITLE	SIZE	FSCM NO.	
	A	19200	9359174
		REVISION LEVEL B	SHEET 6

Book Form "A" Size
(ARDCR 70-12)

IDENTIFICATION OF THE "SUGGESTED SOURCE(S) OF SUPPLY" HEREON IS NOT TO BE CONSTRUED AS A GUARANTEE OF PRESENT OR CONTINUED AVAILABILITY AS A SOURCE OF SUPPLY FOR THE ITEM(S).

SUGGESTED SOURCES OF SUPPLY			
CONTROL NUMBER	CAGE CODE	PART NUMBER	NAME AND ADDRESS
9359174	1GM27	DBPE103A056-12	FISCHER AMERICA INC. 13756 GLEN OAKS BLVD. SYLMAR, CA 91342
9359174	1GM27	DBPE103A056-12	W.W. FISCHER INC. ELECTRONIC CONNECTIONS 1040 CROWN POINTE PARKWAY, #560 ATLANTA, GA 30338

TITLE	SIZE	FSCM NO.	
	A	19200	9359174
		REVISION LEVEL	B SHEET 7

SMCAR FORM 71, 1 FEB 85, REPLACES ARRADCOM 71, 1 DEC 78 (WHICH MAY BE USED UNTIL EXHAUSTED)

FIGURE 7

Book Form "A" Size
(ARDCR 70-12)

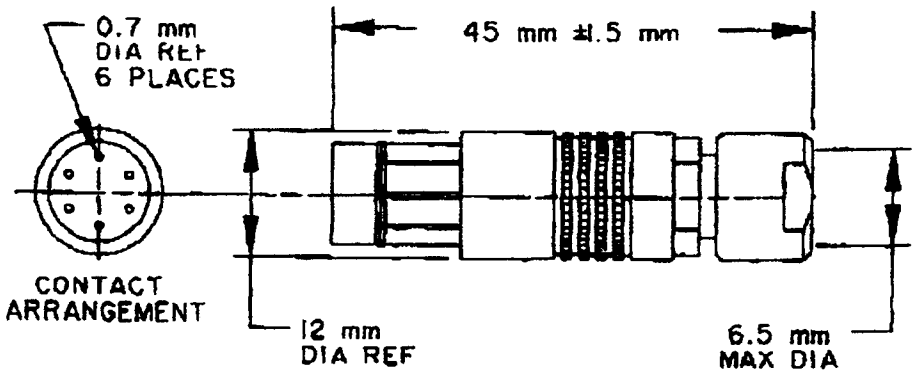

FIGURE 1. Connector Outline

TITLE	SIZE	FSCM NO.	
	A	19200	9359218
		REVISION LEVEL	— SHEET 6

SMCAR FORM 71, 1 FEB 85, REPLACES ARRADCOM 71, 1 DEC 78 (WHICH MAY BE USED UNTIL EXHAUSTED)

FIGURE 8

Book Form "A" Size
(ARDCR 70-12)

IDENTIFICATION OF THE "SUGGESTED SOURCE(S) OF SUPPLY" HEREON IS NOT TO BE CONSTRUED AS A GUARANTEE OF PRESENT OR CONTINUED AVAILABILITY AS A SOURCE OF SUPPLY FOR THE ITEM(S).

SUGGESTED SOURCES OF SUPPLY			
CONTROL NUMBER	CAGE CODE	PART NUMBER	NAME AND ADDRESS
9359218	IGM 27	S103A056-8/5.7-U (Black) with 200.1896 (Solder Cups)	Fischer America, Inc 13756 Glenoaks Blvd. Sylmar, Ca. 91342

FIGURE 9

TITLE	SIZE	FSCM NO.	
	A	19200	9359218
		REVISION LEVEL	A SHEET 7

SMCAR FORM 71, 1 FEB 85, REPLACES ARRADCOM 71, 1 DEC 78 (WHICH MAY BE USED UNTIL EXHAUSTED)