EXHIBIT A

CONTRACT DATA REQUIREMENTS LIST
DDFORM 1423

CONTRACT DATA REQUIREMENTS LIST
DD FORM 1423 (MECHANIZED)
CATEGORY: MISC SYSTEM/ITEM: MK64 MOD 9 MOUNT
TO CONTRACT/PR: M10A1308

1. SEQUENCE NUMBER
14. DISTRIBUTION
DRFT/REG/REPRO COPIES
2. TITLE OF DATA ITEM
3. SUBTITLE
4. DATA ITEM NUMBER
5. CONTRACT REFERENCE
6. TECHNICAL OFFICE 7. DD 250 8. APP CODE 9. DIST STATEMENT REQUIRED
10. FREQUENCY 11. AS OF DATE 15. TOTAL:
12. DATE OF 1ST SUBMISSION 13. DATE OF SUBSEQUENT SUBMISSION
16. REMARKS

---

1. A001
14. AMSTA-AR-CCL-F (ECALS) / /
2. CONFIGURATION CHANGE CONTROL*
3. ENGINEERING ACTIONS
4. DI-CMAN-81554
5. SECTION C
6. AMSTA-AR-ES 7. NO 8. - 9. **
10. ASREQ 11. ---
15. TOTAL 0/ 0/ 0
12. ASREQ 13. ASREQ
16. REMARKS
PREPARE ENGINEERING ACTIONS IAW DI-CMAN-81544 AND SUBMIT ELECTRONICALLY VIA ECALS WORLDWIDE WEB PAGE HTTP://EDMD4.PICA.ARMY.MIL/.*DATA INFORMATION PACKET **DISTRIBUTION STATEMENT WILL BE ASSIGNED AND IMPLEMENTED BY THE DOD CONFIGURATION MANAGER.THE POC FOR ECALS IS LEE SADAUSKAS,AMSTA-AR-QAW,(973)724-6626 LEES@PICA.ARMY.MIL.

---

1. A002
14. AMSTA-AR-QAT-T (1) / 1/
(D) / /
QAR / /
CO (LT ONLY) / /
AMSTA-AR-QAW-C (2) / /
(LT ONLY) (R) / /
2. SPECIAL INSPECTION EQUIPMENT DESCRIPTIVE DOC.
3. AIE DESIGN DOCUMENTATION
4. DI-QCIC-81006*
5. SECTION E
6. AMSTA-AR-QA 7. XX 8. A 9. N/A
10. ONE/R 11.N/A
15. TOTAL 0/ 1/ 0
12. ** 13.WHEN REV.
16. REMARKS
* BLOCK 4: DO NOT ADDRESS PARAGRAPHS 10.1, 10.2, 10.4.1(f) AND 10.4.2. IGNORE ALL REFERENCE TO THE WORD "SPECIAL" IN DID. SUBMIT FOR ALL CRITICAL, SPECIAL AND MAJOR CHARACTERISTICS IN SPECIFICATION OR QAP.** BLOCK 12: SUBMIT 30 DAYS PRIOR TO FA,OR PRODUCTION,IF FA IS WAIVED. THE GOVERNMENT WILL RESPOND WITHIN 30 DAYS OF RECEIPT OF ORIGINALS AND REVISIONS.REVISIONS ARE TO BE SUBMITTED WITHIN 10 DAYS OF RECEIPT OF GOVERNMENT RESPONSE.IF DOCUMENTATION WAS APPROVED ON PRIOR CONTRACT AND NO CHANGES WERE MADE,SUBMIT

ONLY EVIDENCE OF PRIOR APPROVALS.
email: (1)aie-qat@pica.army.mil (2)amsta-ar-qa-cdrl@ria-emh2.army.mil
Text:Microsoft Office 97
Drawings:AutoCAD-Release 14(Expressed mailed hard copies will be accepted)
Files may be compressed using ZIP program.
WARNING: Large packages may cause delays in delivery using mail internet.
Email subject line must contain end item nomenclature.

---

1. A003

2. TEST PROCEDURE/ PHOSPHATE COATING PRE-
3. PRODUCTION PROCEDURE

4. DI-NDTI-80603*

5. MIL-DTL-16232,PARA 3.1

6. AMSTA-AR-WEP-RM 7. XX 8. A 9. N/A

10. ONE/R 11. N/A

12. 60 DAC 13. N/A

14.

PROCUREMENT	/ /
CONTRACTING	/ /
OFFICER	/ 1/

15. TOTAL 0/ 1/ 0

16. REMARKS
BLOCK 8 CONT.-PRIOR TO PRODUCTION, APPROVAL THROUGH THE CONTRACTING OFFICER IS REQUIRED WITHIN 60 DAYS AFTER CONTRACT AWARD. A DD FORM 250 IS NOT REQUIRED FOR PHOSPHATE COATING PROCEDURE APPROVAL. CONTRACTOR FORMAT ACCEPTABLE. SHALL BE SUBMITTED ON AN IBM COMPATIBLE 3-1/2" DISKETTE IN RICH TEXT FORMAT (RTF).

APPROVED BY: STEPHEN J HANSEN, SDMO, AMSTA-AR-QAD DATE: 07/13/2000

ATTACHMENT 001

PRICE EVALUATION SPREADSHEET
CLIN 0001
MK64 MOD 9 MOUNT

DAAE20-
Price Evaluation Spreadsheet
MK64 Mount

DRAFT AS OF 6 Apr 01

CLIN 0001 - MK64 MOD 9 **Guaranteed Minimum Qty** **2,047**

P/N 12972474	**Pricing Period 1**				**Pricing Period 2**		**Pricing Period 3**		
Order Quantity Range	Price w/FA	Weight	Price w/oFA	Weight	Price	Weight	Price	Weight	Total
600 - 1,200		0.2		0.2		0.1		0.1	
1,201 - 2,000	N/A	N/A	N/A	N/A		0.6		0.6	
2,001 - 3,600		0.8		0.8		0.3		0.3	
		1.0		1.0		1.0		1.0	
Weighted Unit Price	$0.00		$0.00		$0.00		$0.00		
Maximum Total Qty	2,700		2,700		2,400		3,600		
Evaluated Unit Price	$0.00		$0.00		$0.00		$0.00		
Evaluated CLIN Price									$0.00

ATTACHMENT 002

DOCUMENT SUMMARY LIST

DOCUMENT SUMMARY LIST

Item: MK64 MOD 9 MOUNT
NSN: 1010-01-412-3159
Control Number/PRON: M10A1308

Identifies all first tier documents (cited in SOW) (applicable DIDs). Also included are all referenced documents (2nd, (includes DID block 10 references), 3rd and lower tier) which have been tailored.

DOCUMENT CATEGORY:

CATEGORY O - Unless otherwise specified in the solicitation, contract, or contract modifications, all documents are for guidance and information only.

CATEGORY 1 - The requirements contained in the directly cited document are contractually applicable to the extent specified. All referenced documents are for guidance and information only.

CATEGORY 2 - The requirements contained in the directly cited document and the reference documents identified in the directly cited document are contractually applicable to the extent specified. All subsequently referenced documents are for guidance and information only.

CATEGORY 3 - Unless otherwise specified in the solicitation, contract or contract modification, all requirements contained in the directly cited document and all reference and subsequently referenced documents are contractually applicable to the extent specified.

Document Number (Contract Reference) Applicable Tailoring	Document Title	Document Date/ Document Category
1a. MIL-STD-2549 Table DIP 4-1	Configuration Management Data Interface	30 Jun 97 Cat 2
1b. DI-CMAN-81554 (seq A001)	Configuration Change Control Data Information Packet	30 Jun 97 Cat 2
2a. NCSL Z540-1 (ES7010)	General Requirements for Calibration Laboratories and Measuring and Test Equipment	30 Aug 94
	OR	
ISO 10012-1 (ES7010)	Quality Assurance Requirements for Measuring Equipment, Part 1: Metrological Confirmation System	1992
2b. DI-QCIC-81006 (DD Form 1423)	Special Inspection Equipment Descriptive Documentation	11 Sep 89 Cat 1
3a. MIL-DTL-16232G (TDPL)	Phosphate Coating Heavy Manganese or Zinc Base	07 Jan 00 Cat 2
3b. DI-NDTI-80603 (DD Form 1423)	Test Procedure	01 Jun 88 Cat 1

ATTACHMENT 003

WELDMENT SAMPLE DRAWINGS

Weldment Samples

Each offeror shall submit one sample of the components identified below representative of the welded joint identified in the following drawings. Coupons of like materials may be substituted for actual parts. The same base and filler materials required in the Technical Data Package (TDP) shall be used for weld samples. If restraining is required in production, the same process shall be used to produce the weld samples. Weld procedures and welder qualifications shall also be sent to the Procuring Contracting Officer (PCO), prior to production for approval.

1. Drawing, 5830056, zone B-6, 3/16 fillet, joining item 1 to 2.

2. Drawing, 5830058, sheet 1, zone A-5, joining item 10 to 8.

3. Drawing, 5830058, sheet 2, zone G-5, joining item 7 to 2.

4. Drawing 12929159, sheet 2, zone E-2, joining item 2 to 3.

5. Drawing 12012070, sheet 1, zone C-6, joing item 2 to 1.

6. Drawing 6650753, sheet 1, zone E-6, joining item 1 to 2.

All proposed weld processes must be evaluated. If an offeror plans to use a GMAW, GTAW, FCAW, etc., process and the weldments mentioned above do not include all of the planned weld process, the offeror shall submit in addition to the above samples, a weld joint representative of the separate weld process. Those samples are to be included with the above mentioned samples.

NOTES:

1. FINISH AS ROLLED OR BLANKED. CUT SURFACES 125√.
2. MARK '53711-5830056' AND 'MFR' FOLLOWED BY MANUFACTURER'S CAGE CODE PER MIL-STD-130 IN APPROX POSITION SHOWN.
3. WELD SPECIFICATIONS:
   WELD REQUIREMENTS: MIL-STD-278, CLASS M-2-A
   WELD MATERIAL: SEE PARTS LIST
   ALTERNATE MATERIAL: AWS A5.28, ER100S.
4. STRESS RELIEVE PER MIL-H-6875.
5. MAGNETIC PARTICLE INSPECT PER MIL-STD-1949.
   SOUNDNESS REQUIREMENTS SPECIFIED BELOW:
   A. WROUGHT MATERIAL PER MIL-STD-1907, GRADE A.
   B. WELDS (INCLUDES DEPOSITED FILLER MATERIAL AND 3/16 INCH OF BASE METAL ADJACENT TO THE TOE OF THE WELD) PER MIL-STD-1907, GRADE C.
6. FINAL PROTECTIVE FINISH: FINISH 5.3.1.3 OR 5.3.2.3 OF MIL-STD-171.
7. PAINT PER MIL-STD-171, FINISH NO. 20.24, COLOR GREEN NO. 383. DO NOT PAINT SURFACES MARKED (N).
8. ALL DIMENSIONS AND SURFACE ROUGHNESS DESIGNATIONS APPLY BEFORE COATING.
9. MATERIAL: ITEMS 2 THRU 6, STEEL 4130 PER ASTM A322, A331, A506, A507; MIL-S-18729, AMS 6350.
10. MIL-W-13855 AND ANSI Y14.5-1973 APPLY.
11. .031 X 45° MAY BE OMITTED WHEN DETAIL 1 (5830113) IS MANUFACTURED TO THE ALTERNATIVE CONFIGURATION.
12. AFTER CARC (PAINTING) APPLY MIL-L-3150 OR MIL-C-18173 GRADE 3 TO UNPAINTED SURFACES.

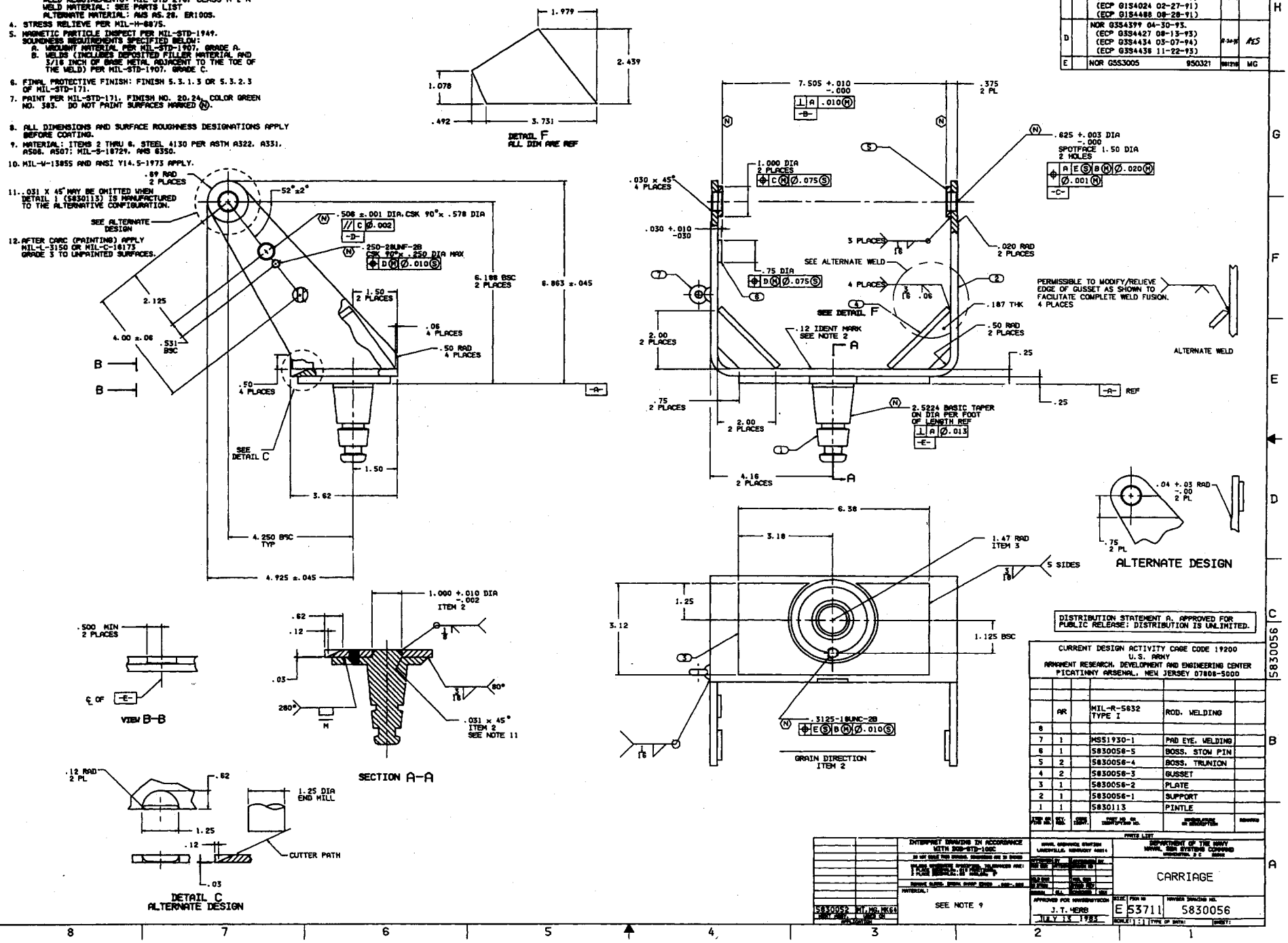

LTR	ZONE	REVISIONS DESCRIPTION	DATE	APPROVED
B		REPLACES REV A WITHOUT CHANGE. REDRAWN ON CAD.	8-10-90	ETM
C		NOR G0S4408 09-11-90. (ECP G1S4004 02-15-91) (ECP G1S4017 02-28-91) (ECP G1S4024 02-27-91) (ECP G1S4488 08-28-91)	12-12-92	ETM
D		NOR G3S4399 04-30-93. (ECP G3S4427 08-13-93) (ECP G3S4434 03-07-94) (ECP G3S4436 11-22-93)	8-24-94	RES
E		NOR G5S3005 950321	951216	MG

DISTRIBUTION STATEMENT A. APPROVED FOR PUBLIC RELEASE; DISTRIBUTION IS UNLIMITED.

CURRENT DESIGN ACTIVITY CAGE CODE 19200
U.S. ARMY
ARMAMENT RESEARCH, DEVELOPMENT AND ENGINEERING CENTER
PICATINNY ARSENAL, NEW JERSEY 07806-5000

ITEM NO.	QTY REQ.	CODE IDENT.	PART NO. OR IDENTIFYING NO.	DESCRIPTION OR NOMENCLATURE	REMARKS
	AR		MIL-R-5632 TYPE I	ROD, WELDING	
8					
7	1		MS51930-1	PAD EYE, WELDING	
6	1		5830056-5	BOSS, STOW PIN	
5	2		5830056-4	BOSS, TRUNION	
4	2		5830056-3	GUSSET	
3	1		5830056-2	PLATE	
2	1		5830056-1	SUPPORT	
1	1		5830113	PINTLE	

PARTS LIST

INTERPRET DRAWING IN ACCORDANCE WITH DOD-STD-100C
DO NOT SCALE THIS DRAWING. DIMENSIONS ARE IN INCHES
UNLESS OTHERWISE SPECIFIED, TOLERANCES ARE: 2 PLACE DECIMAL: ±0.01 FRACTIONAL: ±
REMOVE BURRS. BREAK SHARP EDGES .005-.030

MATERIAL: SEE NOTE 9

5830052 WT. LBS. 1K60
DRAWN BY: MODIFIED BY:
APPLICATION

NAVAL ORDNANCE STATION LOUISVILLE, KENTUCKY 40214
DEPARTMENT OF THE NAVY
NAVAL SEA SYSTEMS COMMAND
WASHINGTON, D.C. 20362

CARRIAGE

APPROVED FOR NAVSEASYSCOM
J.T. HERB
JULY 13 1983

SIZE: E | FSCM NO. 53711 | NAVSEA DRAWING NO. 5830056
SCALE: 1:1 | TYPE OF DATA: | SHEET:

5830056

NOTES:

1. FINISH AS ROLLED, BLANKED AND WELDED. CUT SURFACES 125√.
2. MARK '53711-5830058' AND 'MFR' FOLLOWED BY MANUFACTURER'S CAGE CODE PER MIL-STD-130 IN APPROX POSITION SHOWN.
3. WELD SPECIFICATIONS:
   WELD REQUIREMENTS: MIL-STD-278. CLASS M-2-A
   WELD MATERIAL: SEE PARTS LIST.
   ALTERNATE MATERIAL: AWS A5.28. ER100S.
4. STRESS RELIEVE PER MIL-H-6875.
5. MAGNETIC PARTICLE INSPECT PER MIL-STD-1949. SOUNDNESS REQUIREMENTS SPECIFIED BELOW:
   A. WROUGHT MATERIAL PER MIL-STD-1907, GRADE A.
   B. WELDS (INCLUDES DEPOSITED FILLER MATERIAL AND 1/16 INCH OF BASE METAL ADJACENT TO THE TOE OF THE WELD) PER MIL-STD-1907, GRADE C.
6. FINAL PROTECTIVE FINISH: FINISH 5.3.1.3 OR 5.3.2.3 OF MIL-STD-171.
7. ALL DIMENSIONS AND SURFACE ROUGHNESS DESIGNATIONS APPLY BEFORE COATING.
8. PAINT PER MIL-STD-171, FINISH NO. 20.24, COLOR GREEN 383. DO NOT PAINT SURFACES MARKED (N).
9. MATERIAL: ITEM 1 THRU 12. STEEL 4130 PER ASTM A322, A331, A506, A507; MIL-S-18729, AMS 6350 OR AMS 6370.
10. MIL-W-13855 AND ANSI Y14.5-1973 APPLY.
11. MACHINING MAY BE PERFORMED TO ESTABLISH DATUM -A-. STEPS WILL BE PERMISSIBLE.
12. AFTER CARC (PAINTING) APPLY MIL-L-3150, MIL-L-46010, TYPE I OR MIL-C-16173 GRADE 3 TO UNPAINTED SURFACES.

REV STATUS OF SHEETS	
SHEET 1	SHEET 2
J	H

REVISIONS				
LTR	ZONE	DESCRIPTION	DATE	APPROVAL
D		REPLACES REV C WITHOUT CHANGE. REDRAWN ON CAD.	11-17-89	ETM
E		NOR GQS4408 09-11-90. (ECP GQS4478 12-20-90) (ECP G1S4004 02-15-91) (ECP G1S4017 02-28-91) (ECP G1S4487 09-27-91)	12-17-92	ETM
F		NOR GQS2049 01-17-91. (ECP G2S4034 02-03-93) (ECP G3S4400 02-22-93) (ECP G3S4417 06-24-93) (ECP G3S4434 07-03-94)	4-14-95	RSS
G		NOR G452106 950323	970208	JB
H		NOR L754163 970904	971003	RLV
J		NOR LB52035 990429	990609	RLV

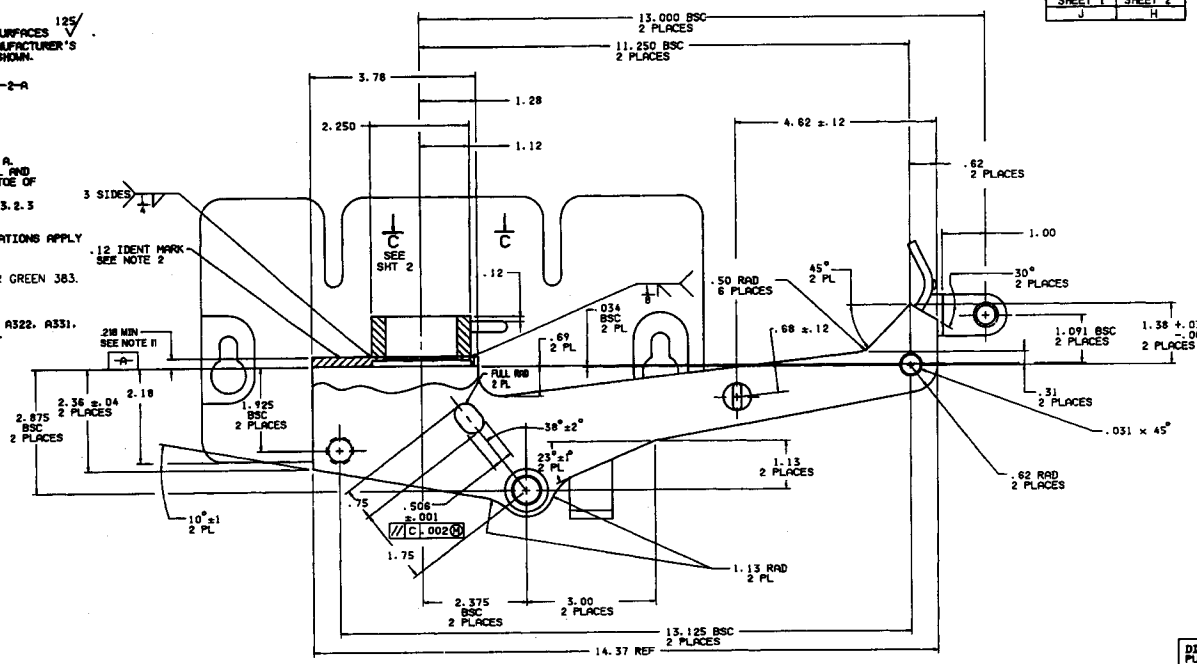

DISTRIBUTION STATEMENT A. APPROVED FOR PUBLIC RELEASE; DISTRIBUTION IS UNLIMITED.

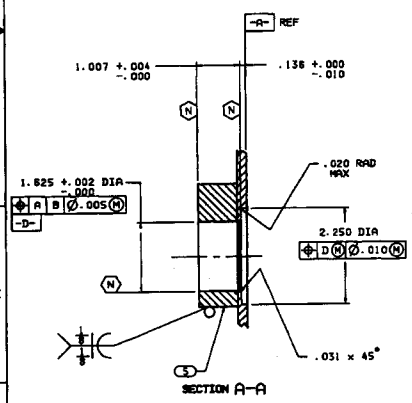

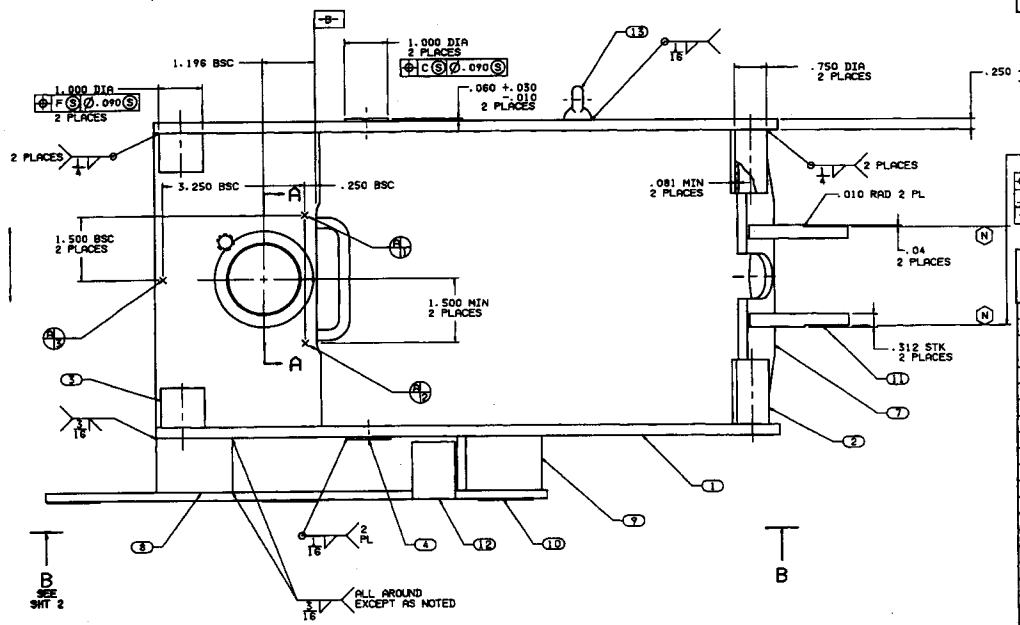

CURRENT DESIGN ACTIVITY CAGE CODE 19200
U.S. ARMY
ARMAMENT RESEARCH, DEVELOPMENT AND ENGINEERING CENTER
PICATINNY ARSENAL, NEW JERSEY 07806-5000

ITEM OR FIGURE NO.	QTY REQD	FSCM NO.	PART NO. OR IDENTIFYING NO.	NOMENCLATURE OR DESCRIPTION	REMARKS
	AR		MIL-R-5632 TYPE I	ROD, WELDING	
14					
13	1		MS51930-1	PAD EYE, WELDING	
12	1		5830058-12	DEFLECTOR, AMMO	
11	2		-11	BRACKET, T & E	
10	1		-10	PLATE, MOUNTING	
9	1		-9	BRACE, AFT	
8	1		-8	BRACE, FWD	
7	1		-7	DEFLECTOR, CASE	
6	1		-6	HANGER, FWD	
5	1		-5	BLOCK, PINTLE	
4	2		-4	BOSS, TRUNNION	
3	2		-3	BOSS, FWD	
2	2		-2	BOSS, AFT	
1	1		5830058-1	CRADLE	

PARTS LIST

INTERPRET DRAWING IN ACCORDANCE WITH DOD-STD-100C

DO NOT SCALE THIS DRAWING. DIMENSIONS ARE IN INCHES

UNLESS OTHERWISE SPECIFIED, TOLERANCES ARE: 2 PLACE DECIMALS: ±1° FRACTIONS: 3 PLACE DECIMALS: ±.01 ANGLES: ±1°

REMOVE BURRS. BREAK SHARP CORNERS .005-.020

MATERIAL: SEE NOTE 9

5830134 MT NO. MK44 NEXT ASSY USED ON

NAVAL ORDNANCE STATION LOUISVILLE, KENTUCKY 40214

DEPARTMENT OF THE NAVY NAVAL SEA SYSTEMS COMMAND WASHINGTON, D.C. 20362

APPROVED BY: PROJ ENG | DATE | APPROVED BY: DESIGN ENG

ALL DIM | DATE | MAT. ENG

DR PTRN | PROD ENG

DRAWN | DATE | CONTROL | MGR

APPROVED FOR NAVSEA/NOSC: J T HERB JULY 13 1983

CRADLE

SIZE E | FSCM NO. 53711 | NAVSEA DRAWING NO. 5830058

SCALE: 1:1 | TYPE OF DATA: | SHEET 1 OF 2

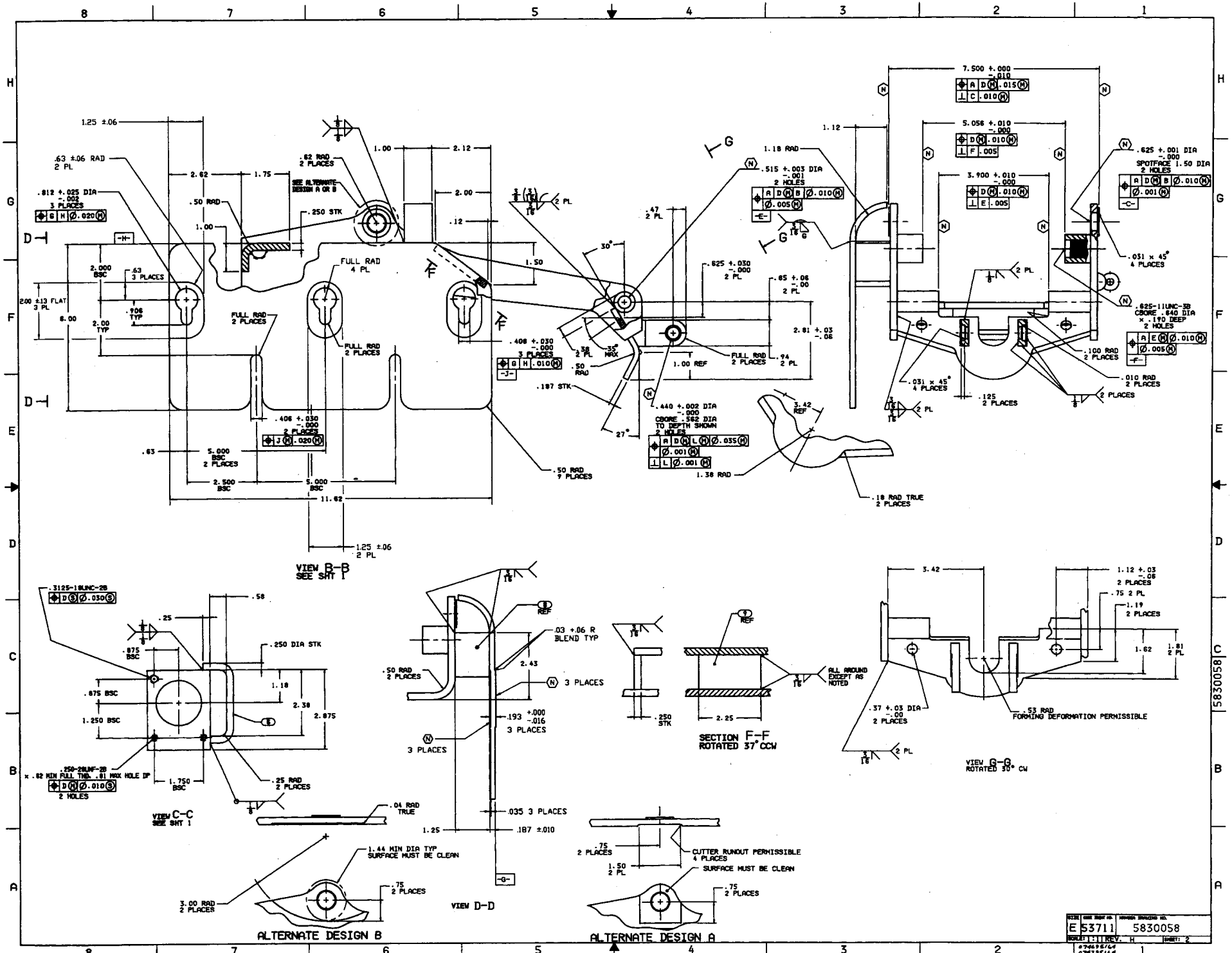
VIEW B-B
SEE SHT 1
VIEW C-C
SEE SHT 1
SECTION F-F
ROTATED 37° CCW
VIEW G-G
ROTATED 30° CW
VIEW D-D
ALTERNATE DESIGN B
ALTERNATE DESIGN A
SEE ALTERNATE DESIGN A OR B
ALL AROUND EXCEPT AS NOTED
FORMING DEFORMATION PERMISSIBLE
CUTTER RUNOUT PERMISSIBLE 4 PLACES
SURFACE MUST BE CLEAN
1.44 MIN DIA TYP SURFACE MUST BE CLEAN
.812 +.025 DIA -.002 3 PLACES
.625 +.001 DIA -.000 SPOTFACE 1.50 DIA 2 HOLES
.625-11UNC-3B CBORE .640 DIA x .190 DEEP 2 HOLES
.515 +.003 DIA -.001 2 HOLES
.440 +.002 DIA -.000 CBORE .562 DIA TO DEPTH SHOWN 2 HOLES
.3125-18UNC-2B
.250-28UNF-2B x .82 MIN FULL THD. .81 MAX HOLE DP 2 HOLES
.406 +.030 -.000 2 PLACES
.408 +.030 -.000 3 PLACES
7.500 +.000 -.010
5.056 +.010 -.000
3.900 +.010 -.000
11.62
5.000 BSC 2 PLACES
2.500 BSC
1.750 BSC
.250 DIA STK
.187 STK
.250 STK
.193 +.000 -.016 3 PLACES
.035 3 PLACES
.187 ±.010
.04 RAD TRUE
.10 RAD TRUE 2 PLACES
.50 RAD 7 PLACES
.37 +.03 DIA -.00 2 PLACES
1.12 +.03 -.06 2 PLACES
1.81 2 PL
1.62
1.19 2 PLACES
.75 2 PL
.53 RAD
3.42
3.42 REF
1.38 RAD
1.18 RAD
1.00 REF
FULL RAD 2 PLACES
FULL RAD 4 PL
.100 RAD 2 PLACES
.010 RAD 2 PLACES
.031 x 45° 4 PLACES
.125 2 PLACES
.25 RAD 2 PLACES
.03 +.06 R BLEND TYP
.50 RAD 2 PLACES
3 PLACES
.875 BSC
1.250 BSC
2.875
2.38
1.18
2.43
1.25 ±.06 2 PL
.63 ±.06 RAD 2 PL
.200 ±.13 FLAT 3 PL
2.000 BSC
.63 3 PLACES
.906 TYP
2.00 TYP
6.00
1.25
1.00
2.62
1.75
2.12
2.00
.12
.50 RAD
.62 RAD 2 PLACES
.47 2 PL
.625 +.030 -.000 2 PL
.65 +.06 -.00 2 PL
2.81 +.03 -.06
.94 2 PL
.38 2 PL
.50 RAD
30°
27°
35° MAX
.75 2 PLACES
1.50 2 PL
3.00 RAD 2 PLACES
.75 2 PLACES
E 53711
5830058
SCALE 1:1 REV. H
SHEET 2

NOTES:

1. APPLICABLE STANDARDS/SPECIFICATIONS:
   A. DOD-STD-00100D(AR)
   B. ANSI Y14.5M-1982
   C. MIL-W-13855
   D. MIL-STD-2219, CLASS C OR MIL-STD-1261, CLASS 1
2. MATERIAL: STEEL PER ASTM A589. .120 STK EXCEPT AS NOTED.
3.
4. FINISH AS ROLLED, BLANKED, AND WELDED. CUT SURFACES 125√.
5. STRESS RELIEVE PER MIL-H-6875.
6. FINAL PROTECTIVE FINISH: FINISH 5.3.1.3 OR 5.3.2.3 OF MIL-STD-171.
7. MASK ITEMS 12929159-3 AND 12926699-2 IN AREA (N), AND THREADS. PAINT ALL OTHER SURFACES PER MIL-STD-171, FINISH NO. 20.24, COLOR GREEN 383.
8. EDGES MARKED BY (X) SHALL HAVE 1/8 FILLET WELD OR .12 INSIDE RADIUS BEND.
9. AFTER CARC (PAINTING) APPLY MIL-L-3150, MIL-L-46010, TYPE I OR MIL-C-16173 GRADE 3 TO UNPAINTED SURFACES.

REVISIONS

ZONE	LTR	DESCRIPTION	DATE (YR-MO-DA)	APPROVED
	A	REPLACES REV - WITHOUT CHANGE. REDRAWN ON CAD	91-11-21	RES
	B	NOR G0S2060 01-2-91 (ECP G1S2039 08-09-91) (ECP G1S2052R1 11-27-91) (ECP G1S4525 12-03-91)	92-01-09	RES
	C	NOR G2S4021 11-25-92 (ECP G3S2029 07-29-93) (ECP G3S4434 03-07-94)	95 11 08	RES
	D	NOR G3S2048 950110 (ECP G4S2106 950323)	961024	JB
	E	NOR L7S3008 970328	970415	RLV
	F	NOR L7S4163 970904	971003	RLV
	G	NOR L7S3080 971205	980304	RLV
	H	NOR L8S2035 990429	990609	RLV
	J	NOR L0S3047 010108	010131	RLV

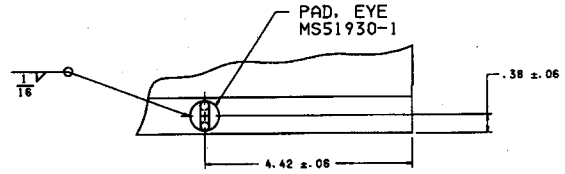

VIEW C-C
SCALE 1/1

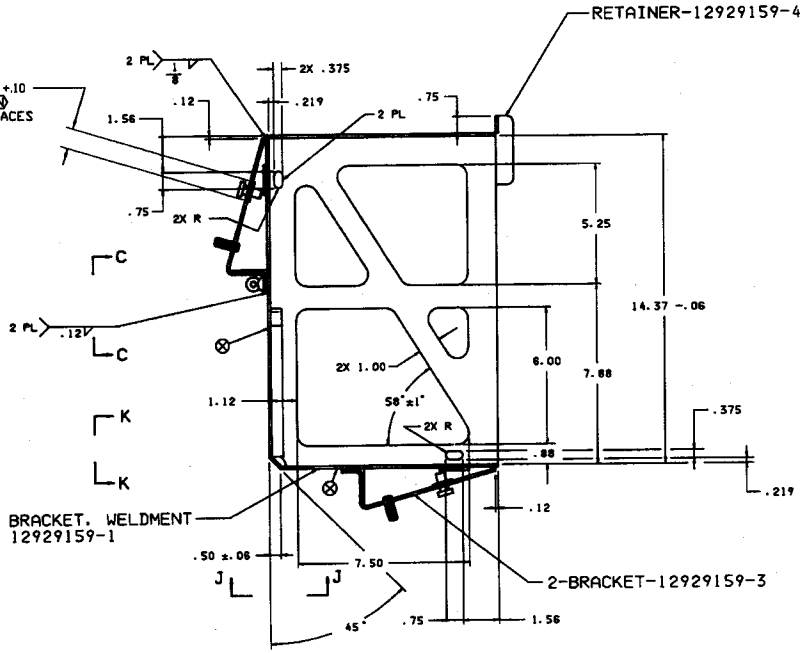

VIEW K-K

SECTION A-A

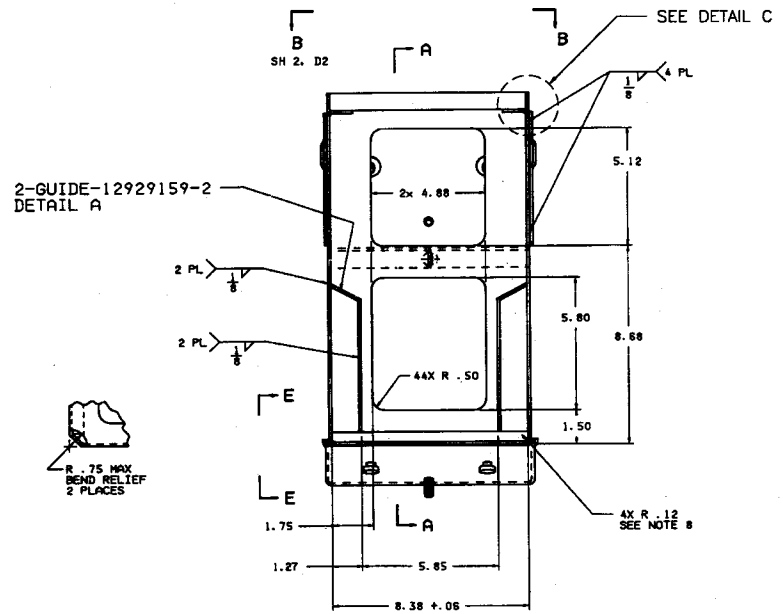

J	J
SHT 1	SHT 2
REVISION STATUS OF SHEETS	

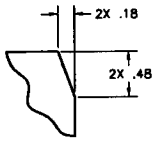

DETAIL C
SCALE: 2/1
NOTE: APPLIES AT WELDED CORNERS WHICH ARE UNDER SHALLOW END OF 12929159-3. SEE NOTE 8.

VIEW J-J

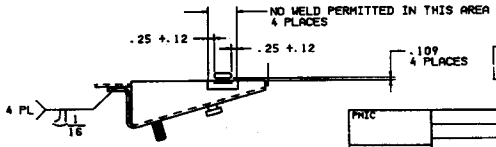

VIEW E-E
SCALE 1/2

DISTRIBUTION STATEMENT A. APPROVED FOR PUBLIC RELEASE; DISTRIBUTION IS UNLIMITED.

PART NO. 12929159

PHIC			
MECHANICAL PROPERTIES			
VP			
TS			
YS			
EL			
RA			
BH			
RH			
		MOUNT. MK64	
	12929150	MOD5. MOD7	
	NEXT ASSY	USED ON	
	APPLICATION		

DO NOT SCALE DRAWING
UNLESS OTHERWISE SPECIFIED DIMENSIONS ARE IN INCHES
TOLERANCES ON
DECIMAL: 2 PL ±, 3 PL ±
FRACTION: ANGLE ±
THIRD ANGLE PROJECTION
MATL SPEC

CONTRACT NUMBER
CONTRACTOR
DRAWN BY MGK — DATE (YR-MO-DA) 91-11-21
CHECKER — ENGINEER B. EDWARD
DRAWING APPROVAL
DESIGN APPROVAL CURTIS D. JOHNSON

DESIGN ACTIVITY 19200 U.S. ARMY ARMAMENT RESEARCH, DEVELOPMENT AND ENGINEERING CENTER PICATINNY ARSENAL, NEW JERSEY 07806-5000

BRACKET, WELDMENT

SIZE F — CAGE CODE 19200 — 12929159
SCALE 1/2 — UNIT WT. — SHEET 1 OF 2

1=5995143

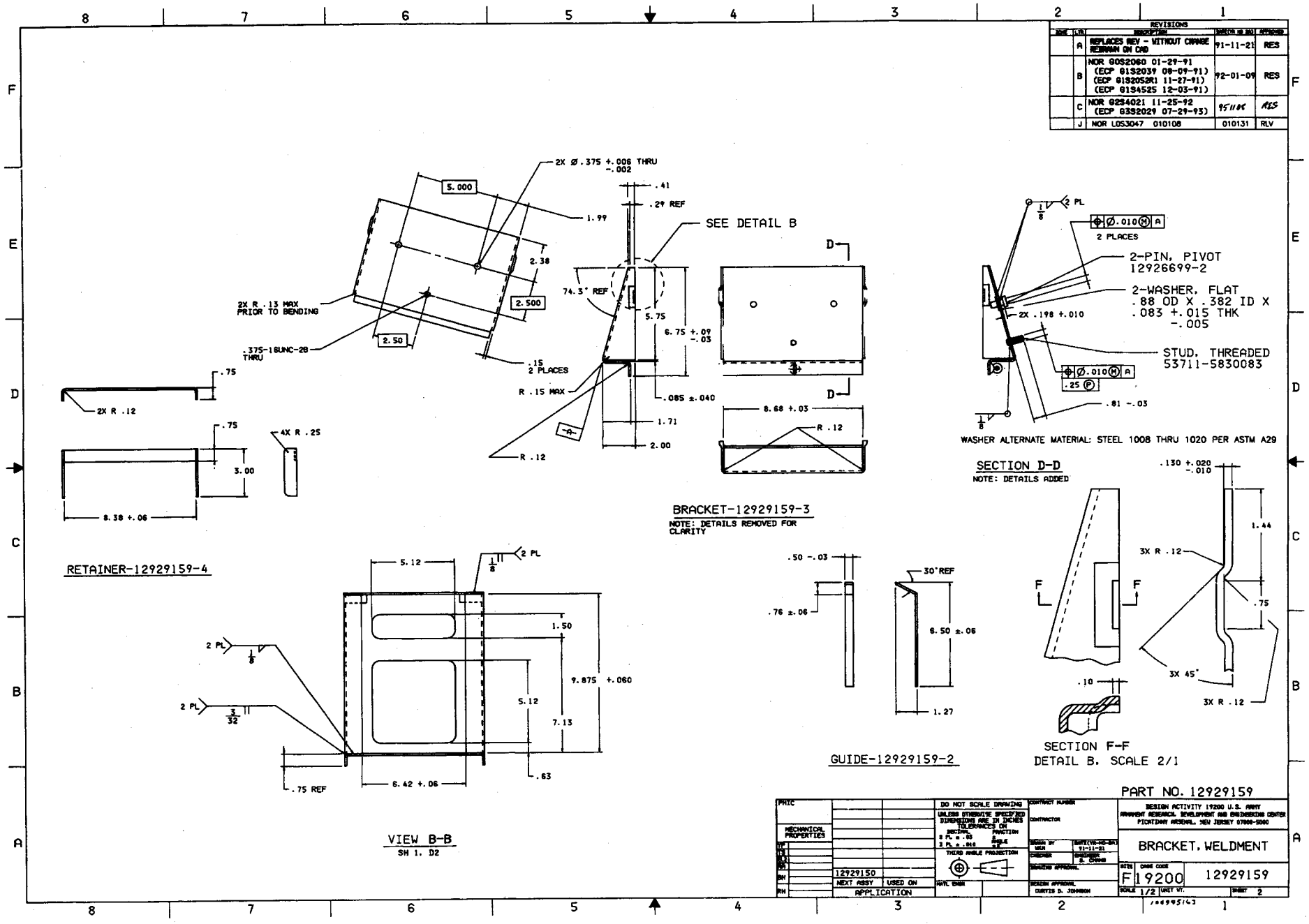
REVISIONS
A REPLACES REV - WITHOUT CHANGE REDRAWN ON CAD 91-11-21 RES
B NOR G0S2060 01-29-91 (ECP G1S2039 08-09-91) (ECP G1S2052R1 11-27-91) (ECP G1S4525 12-03-91) 92-01-09 RES
C NOR G2S4021 11-25-92 (ECP G3S2029 07-29-93) 95110 RES
J NOR L0S3047 010108 010131 RLV
2X Ø.375 +.006 THRU -.002
5.000
1.99
2.38
2.500
2.50
2X R .13 MAX PRIOR TO BENDING
.375-16UNC-2B THRU
.15 2 PLACES
.41
.29 REF
SEE DETAIL B
74.3° REF
5.75
6.75 +.09 -.03
R .15 MAX
.085 ±.040
1.71
2.00
R .12
A
D
8.68 +.03
R .12
BRACKET-12929159-3
NOTE: DETAILS REMOVED FOR CLARITY
.75
2X R .12
.75
4X R .25
3.00
8.38 +.06
RETAINER-12929159-4
2 PL
Ø.010 M A
2 PLACES
2-PIN, PIVOT 12926699-2
2-WASHER, FLAT .88 OD X .382 ID X .083 +.015 THK -.005
2X .198 +.010
STUD, THREADED 53711-5830083
Ø.010 M A
.25 P
.81 -.03
WASHER ALTERNATE MATERIAL: STEEL 1008 THRU 1020 PER ASTM A29
SECTION D-D
NOTE: DETAILS ADDED
.130 +.020 -.010
1.44
3X R .12
.75
3X 45°
3X R .12
.10
SECTION F-F
DETAIL B, SCALE 2/1
5.12
2 PL
1.50
9.875 +.060
5.12
7.13
.63
6.42 +.06
.75 REF
VIEW B-B
SH 1, D2
.50 -.03
.76 ±.06
30° REF
6.50 ±.06
1.27
GUIDE-12929159-2
PART NO. 12929159
DESIGN ACTIVITY 19200 U.S. ARMY ARMAMENT RESEARCH, DEVELOPMENT AND ENGINEERING CENTER PICATINNY ARSENAL, NEW JERSEY 07806-5000
BRACKET, WELDMENT
DO NOT SCALE DRAWING
UNLESS OTHERWISE SPECIFIED DIMENSIONS ARE IN INCHES
TOLERANCES ON
THIRD ANGLE PROJECTION
MECHANICAL PROPERTIES
12929150
NEXT ASSY
USED ON
APPLICATION
CONTRACT NUMBER
CONTRACTOR
DESIGN APPROVAL
CURTIS D. JOHNSON
F 19200
12929159
SCALE 1/2
SHEET 2

DRAWING SIZE D

NOTES:

1. APPLICABLE STANDARDS/SPECIFICATIONS:
   A. ANSI Y14.5M-1982
   B. MIL-W-13855
   C. MIL-STD-100E
2. PROTECTIVE FINISH: 5.1.1, 5.3.1.3, OR 5.3.2.3 FOLLOWED BY 20.24 OF MIL-STD-171. COLOR GREEN 34094 OF FED-STD-595. (SEE NOTE 5)
3. WELD USING THE INERT GAS SHIELDED ELECTRODE PROCESS IAW MIL-STD-1261 CLASS 2.
4. ALL DIMENSIONS APPLY AFTER WELDING.
5. MASK AREAS MARKED ⊗ INCLUDING ALL HOLES AND SLOTS FROM FINISH 20.24 ONLY. AFTER FINISHING WITH 20.24, USE SUPPLEMENTAL OIL TREATMENT OF MIL-C-16173, GR3 OR MIL-L-3150 ON PREVIOUSLY MARKED SURFACE OF FINISH 5.1.1, 5.3.1.3, OR 5.3.2.3.
6. "MARK "19200 ASSY 12012061" FOLLOWED BY "MFR" AND THE MANUFACTURER'S CAGE CODE PERMANENTLY AND LEGIBLY IN APPROXIMATE LOCATION SHOWN.

REVISIONS

ZONE	LTR	DESCRIPTION	DATE (YR MO DA)	APPROVED
	-	PRODUCT BASELINE ERR L7S9006	970607	DR
	A	NOR L7S3031 970613 (ECP L7S3050 970902) (ECP L7S4164 971003)	971030	RLV
	B	NOR L7S2073 980205	980521	TPT
	C	NOR L8S3004 980507 (ECP L8S2007 980508)	980605	RLV
	D	NOR L8S3039 / 981029	981125	DR

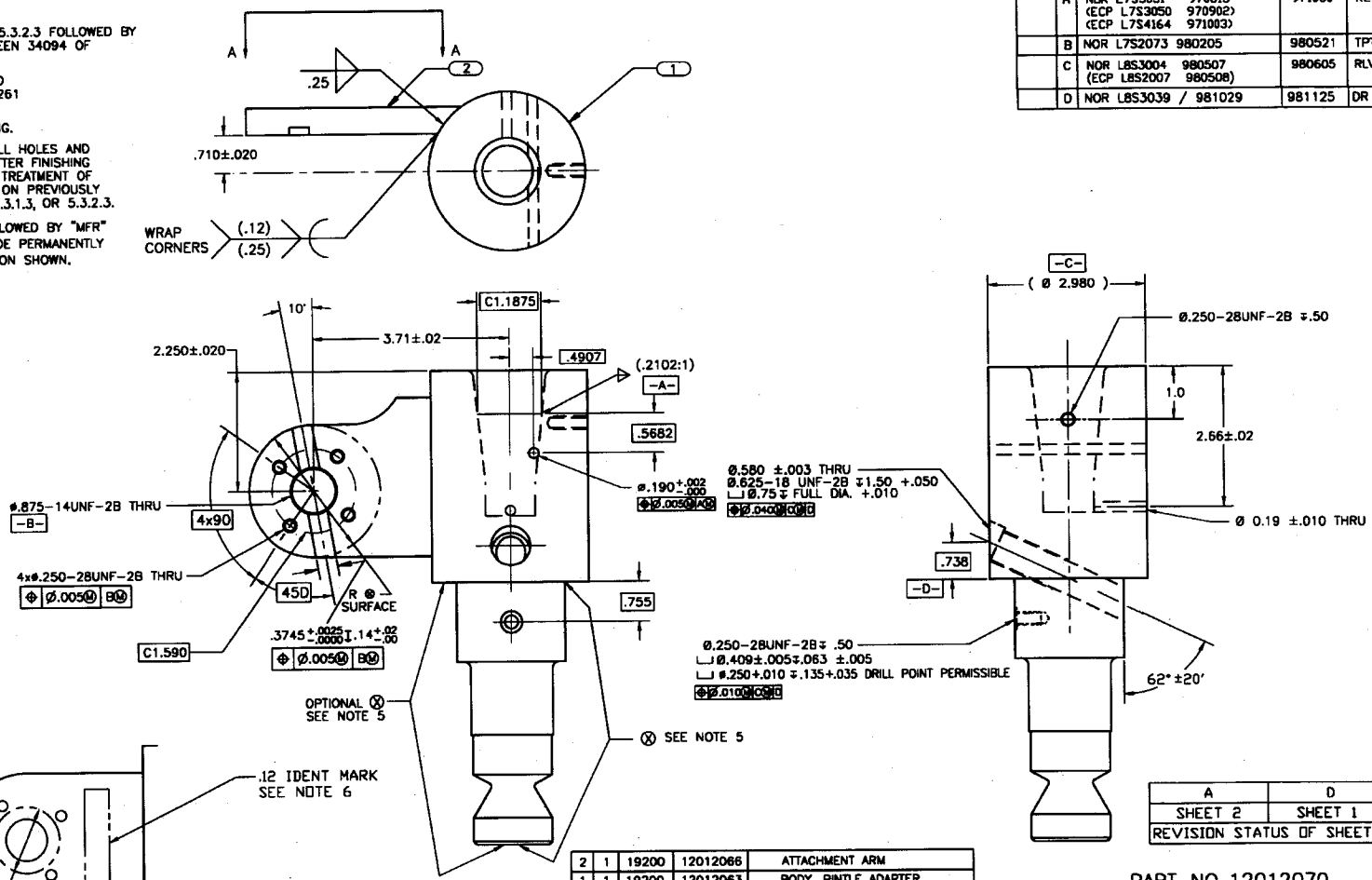

2	1	19200	12012066	ATTACHMENT ARM
1	1	19200	12012063	BODY, PINTLE ADAPTER

A	D
SHEET 2	SHEET 1
REVISION STATUS OF SHEETS	

PART NO. 12012070

PMIC

MECHANICAL PROPERTIES

YP
YS
EL2
RA
BH
RH

NEXT ASSY | USED ON
APPLICATION

DO NOT SCALE DRAWING
UNLESS OTHERWISE SPECIFIED DIMENSIONS ARE IN INCHES
TOLERANCES ON
DECIMAL ±
2 PL ±.01
3 PL ±.001
THIRD ANGLE PROJECTION

CONTRACT NUMBER
CONTRACTOR
DRAWN BY DR 970607
CHECKED
ENGINEER
DRAWING APPROVAL
DESIGN APPROVAL
MATL ENGR

DESIGN ACTIVITY U.S. ARMY
ARMAMENT RESEARCH, DEVELOPMENT AND ENGINEERING CENTER
PICATINNY ARSENAL, NEW JERSEY 07806-5000

PINTLE ADAPTER/
ARM ASSEMBLY

SIZE D | CAGE CODE 19200 | 12012070
SCALE NONE | UNIT WT. | SHEET 1 OF 2

SMCAR FORM 68, 1 DEC 87(TEMP), REPLACES SMCAR FORM 68, 1 MAR 87(TEMP), WHICH MAY BE USED UNTIL EXHAUSTED

NOTES:

1. MATERIAL: STEEL, C1018-C1020 PER ASTM A108.
2. FINISH PER 5.3.1.2 OR 5.3.2.2 OF MIL-STD-171.
3. WELD IN ACCORDANCE WITH CODE AWS D.1.1.
4. ALL DIMENSIONS APPLY AFTER WELDING AND COATING.
5. MIL-W-13855 AND ANSI Y14.5M-1982 APPLY.
6. ALTERNATIVE METHOD OF FABRICATION: FIND NO. 1 AND FIND NO. 2 MAY BE FORMED AS A SINGLE PIECE.

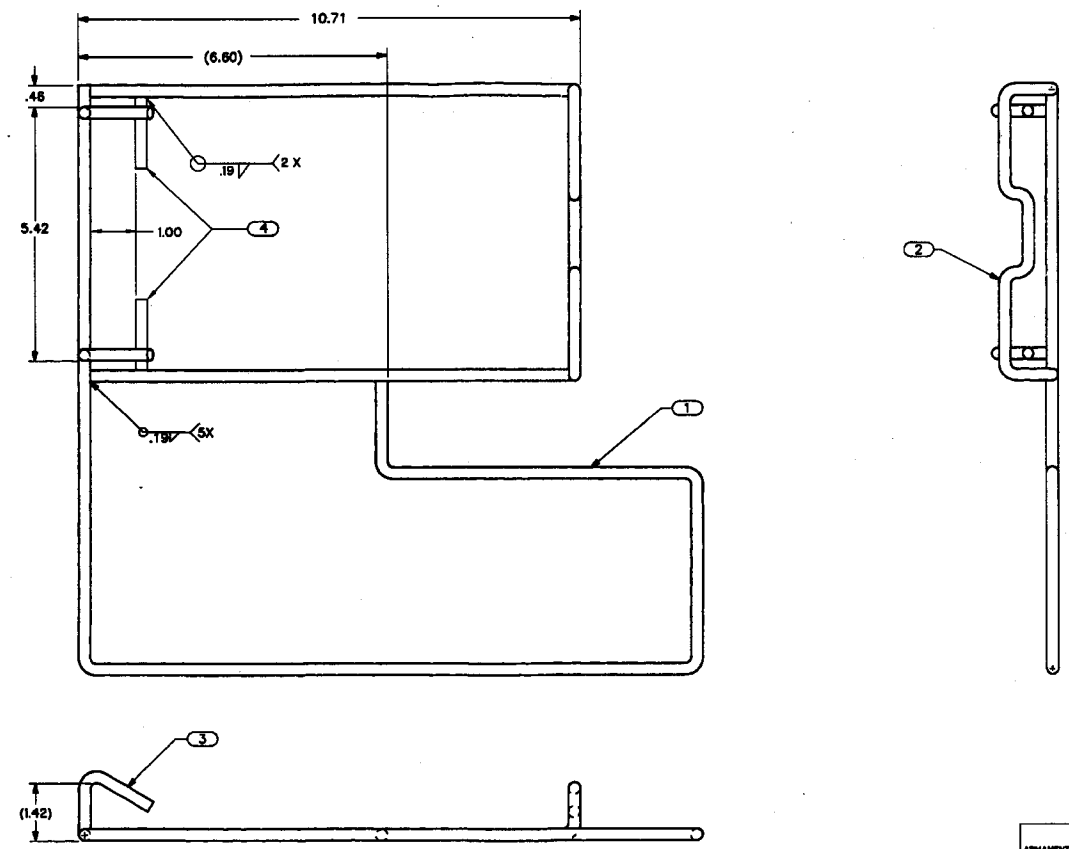

ZONE	LTR	DESCRIPTION	DATE	APPROVED
	A	NOR 6452125 941017	941031	RJC
	B	NOR 6653007 960223	960514	HJS
	C	NOR 6652020 960910 (ECP 6653140 961031)	970210	JB
	D	NOR 6653164 970603	970722	HJS

C	D
SH 2	SH 1
REV STATUS OF SHEETS	

CURRENT DESIGN ACTIVITY CAGE CODE 19200
U.S. ARMY
ARMAMENT RESEARCH, DEVELOPMENT AND ENGINEERING CENTER
PICATINNY ARSENAL, NEW JERSEY 07806-5000

FIND NO.	QTY REQD	CAGE CODE	PART OR IDENTIFYING NO.	NOMENCLATURE OR DESCRIPTION	MATERIAL OR NOTE	SPECIFICATION
4	2	53711	6650753-4	ROD - .025 DIA. 1.5 LONG	SEE NOTE 1	A331
3	2	53711	6650753-3	ROD	SEE NOTE 1	A331
2	1	53711	6650753-2	ROD	SEE NOTE 1, 6	A331
1	1	53711	6650753-1	ROD	SEE NOTE 1, 6	A331

PARTS LIST

NEXT ASSY	LISTED ON	USED ON
12972474		MK84 MOD 9
6650760		16N04 RETROFIT KIT

APPLICATION

CRANE DIVISION
NAVAL SURFACE WARFARE CENTER
CRANE, INDIANA 47522

DEPARTMENT OF THE NAVY
NAVAL SEA SYSTEMS COMMAND
WASHINGTON, D.C. 20362

CATCH BAG FRAME

R. A. KARCHER

SIZE F | CAGE CODE 53711 | SCALE 1/1 | SHEET 1 OF 2 | DWG NO. 6650753 | REV D

DISTRIBUTION STATEMENT A.
APPROVED FOR PUBLIC RELEASE;
DISTRIBUTION IS UNLIMITED.

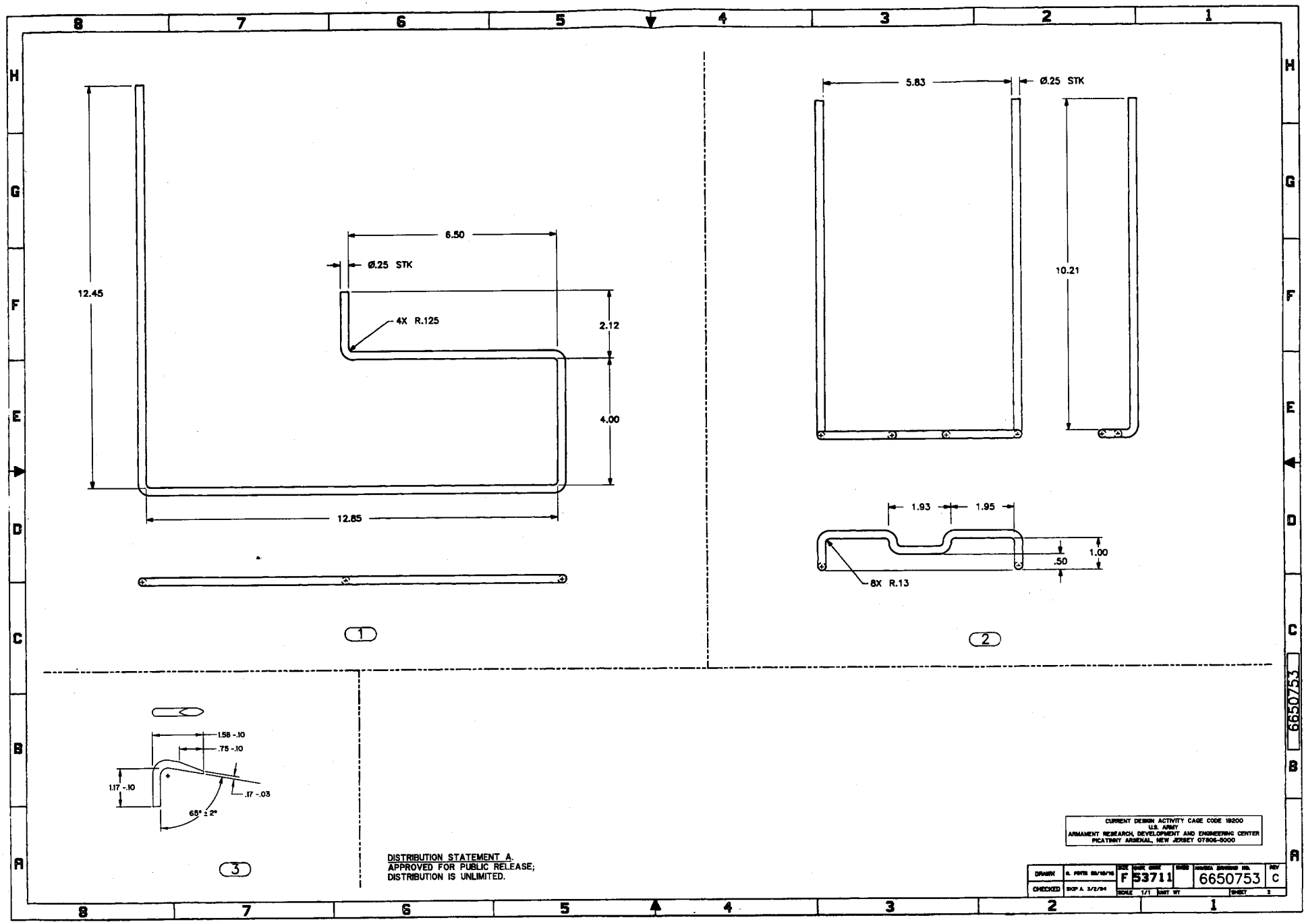

DISTRIBUTION STATEMENT A.
APPROVED FOR PUBLIC RELEASE;
DISTRIBUTION IS UNLIMITED.

CURRENT DESIGN ACTIVITY CAGE CODE 19200
U.S. ARMY
ARMAMENT RESEARCH, DEVELOPMENT AND ENGINEERING CENTER
PICATINNY ARSENAL, NEW JERSEY 07806-5000

DRAWN	G. FORTIS 03/10/16	SIZE F	CODE IDENT 53711		NAVSEA DRAWING NO. 6650753	REV C
CHECKED	SKIP A. 3/2/94	SCALE 1/1	UNIT WT		SHEET 2	

6650753

Attachment 004

ENGINEERING CHANGE PROPOSAL (ECP), PAGE 1

1. DATE (YYMMDD): 990914

Form Approved OMB No. 0704-0188

Public reporting burden for this collection of information is estimated to average 2 hour per response, including the time for reviewing instructions, searching existing data sources, gathering and maintaining the data needed, and completing and reviewing the collection of information. Send comments regarding this burden estimate or any other aspect of this collection of information, including suggestions for reducing this burden to Department of Defense, Washington Headquarters Services Directorate for Information Operations and Reports, 1215 Jefferson Davis Highway, Suite 1204, Arlington, VA 22202-4302, and to the Office of Management and Budget, Paperwork Reduction Project (0704-0188), Washington, DC 20503.
PLEASE DO NOT RETURN YOUR COMPLETED FORM TO EITHER OF THESE ADDRESSES. RETURN COMPLETED FORM TO THE GOVERNMENT ISSUING CONTRACTING OFFICER FOR THE CONTRACT / PROCURING ACTIVITY NUMBER LISTED IN ITEM 2 OF THIS FORM.

2. PROCURING ACTIVITY NO.: L0S2007

3. DODAAC:

4. ORIGINATOR
a. TYPED NAME (First, Middle Initial, Last): SMITH, R.E.
b. ADDRESS (Street, City, State, Zip Code): US ARMY ARDEC, PICATINNY ARSENAL, NJ 07806-5000

5. CLASS OF ECP: I

6. JUST. CODE: D

7. PRIORITY: R

8. ECP DESCRIPTION
a. MODEL / TYPE: MK93
b. CAGE CODE: 19200
c. SYSTEM DESIGNATION: MACHINE GUN MOUNT

9. BASELINE AFFECTED: [ ] FUNCTIONAL [X] PRODUCT [ ] ALLOCATED

d. ECP NO.: 99RES007
e. TYPE: F
f. REV:

10. OTHER SYS. / CONFIG. ITEMS AFFECTED: [ ] YES [X] NO

11. SPECIFICATION AFFECTED

	CAGE Code	Specification/Document No.	Rev.	SCN
a. SYSTEM				
b. DEVELOPMENT				
c. PRODUCT				

12. DRAWING AFFECTED

CAGE Code	Number	Rev.	NOR
	SEE		
	ATTACHED		
	LIST		

13. TITLE OF CHANGE
UPDATE FOR SPEC CHANGES

14. CONTRACT NO. AND LINE ITEM

15. PROCURING CONTRACTING OFFICER
a. NAME (First, Middle Initial, Last)
b. Code
c. TELEPHONE NO.

16. CONFIGURATION ITEM NOMENCLATURE
MOUNT, MG, MK93

17. IN PRODUCTION? [X] YES [ ] NO

18. ALL LOWER LEVEL ITEMS AFFECTED
a. NOMENCLATURE: MOUNT, MG, MK93
b. PART NO.: MULTIPLE
c. NSN:

19. DESCRIPTION OF CHANGE
THIS ACTION PROPOSES TO ADD GROOVES AND SNAP RINGS TO REPLACE THE "STAR WASHERS" TO RETAIN THE LINEAR BEARINGS IN THE FRONT LEFT, FRONT RIGHT, AND REAR SLIDER ASSEMBLIES. ALSO A LOCK WASHER AND A TORQUE REQUIREMENT ARE PROPOSED FOR ASSEMBLING THE SMALL PINTLE IN THE CARRIAGE ASSEMBLY.

20. NEED FOR CHANGE
THIS PROPOSAL IS SUBMITTED IN RESPONSE TO VERIFIED FIELD COMPLAINTS OF "STAR WASHERS" AND PINTLE RETAINING NUTS WORKING LOOSE.

21. PRODUCTION EFFECTIVITY BY SERIAL NUMBER

22. EFFECT ON PRODUCTION DELIVERY SCHEDULE

23. RETROFIT
a. RECOMMENDED ITEM EFFECTIVITY
b. SHIP / VEHICLE CLASS AFFECTED
c. ESTIMATED KIT DELIVERY SCHEDULE
d. LOCATION OR SHIP / VEHICLE NUMBER AFFECTED

24. ESTIMATED COST / SAVINGS UNDER CONTRACT

25. ESTIMATED NET TOTAL COSTS / SAVINGS

26. SUBMITTING ACTIVITY
a. AUTHORIZED SIGNATURE: RICHARD E. SMITH
b. TITLE: GENERAL ENGINEER

27. APPROVAL / DISAPPROVAL

1 OF 17

a. CLASS I: [ ] APPROVAL RECOMMENDED [ ] DISAPPROVAL RECOMMENDED
b. CLASS II: [ ] APPROVED [ ] DISAPPROVED
c. CLASS III: [ ] CONCUR IN CLASSIFICATION OF CHANGE [ ] DO NOT CONCUR IN CLASSIFICATION OF CHANGE
d. GOVERNMENT ACTIVITY
e. SIGNATURE
f. DATE SIGNED (YYMMDD)
g. APPROVAL: [X] APPROVED [ ] DISAPPROVED
h. GOVERNMENT ACTIVITY: OPM SMALL ARMS AMSTA-LC-AS
i. SIGNATURE
j. DATE SIGNED (YYMMDD): 4/10/00

DD Form 1692-E, APR 92 — Previous editions are obsolete

DISTRIBUTION STATEMENT A:

LOS 2007

AFFECTED DOCUMENTS:

6650436

6650437

6650438

6650440

6650451

6650452

6650725

SQ6650436
SQ6650437
SQ6650438
SQ6650450
SQ6650489

NOTICE OF REVISION (NOR)

THIS REVISION DESCRIBED BELOW HAS BEEN AUTHORIZED FOR THE DOCUMENT LISTED.

1. DATE (YYMMDD): 990914

Form Approved OMB No. 0704 - 0188

Public reporting burden for this collection of information is estimated to average 5 hours per response, including the time for reviewing instructions, searching existing data sources, gathering and maintaining the data needed, and completing the collection of information. Send comments regarding this burden estimate or any other aspect of this information, including suggestions for reducing this burden to Department of Defense, Washington Headquarters Services, Directorate of Information Operations and Reports, 1215 Jefferson Davis Highway, Suite 1204, Arlington, VA 22202-4302, and to the Office of Management and Budget, Paperwork Reduction Project (0704-0188), Washington, DC 20503.
PLEASE DO NOT RETURN YOUR COMPLETED FORM TO EITHER OF THESE ADDRESSES. RETURN COMPLETED FORM TO THE GOVERNMENT ISSUING CONTRACTING OFFICER FOR THE CONTRACT / PROCURING ACTIVITY NUMBER LISTED IN ITEM 2 OF THIS FORM.

2. PROCURING ACTIVITY NO.: I0S2007

3. DODAAC:

4. ORIGINATOR

a. TYPED NAME (First, Middle Initial, Last): R E SMITH

b. ADDRESS (Street, City, State, Zip Code): US ARMY ARDEC, PICATINNY ARSENAL, NJ

5. CAGE CODE: 19200

6. NOR NO.: I0S2007-1

7. CAGE CODE: 53711

8. DOCUMENT NO.: 6650436

9. TITLE OF DOCUMENT: SLIDER ASSY, FRONT (LH)

10. REVISION LETTER

a. CURRENT: A

b. NEW:

11. ECP NO.: 99RES007

12. CONFIGURATION ITEM (OR SYSTEM) TO WHICH ECP APPLIES: MK93 MG MOUNT

Sheet 1 of 1

13. DESCRIPTION OF REVISION

IN INTEGRAL PARTS LIST ITEM 4: DELETE "19200".

CHANGE "12972473" TO "MS16625-4125".

ZONES C2,C3: CHANGE DEPICTIONS AS SHOWN BELOW TO REFLECT RETAINING RING CHANGE.

FROM:

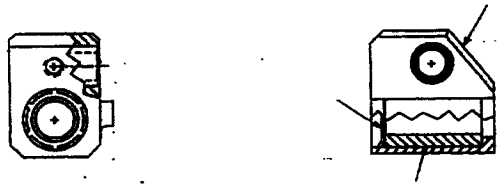

TO:

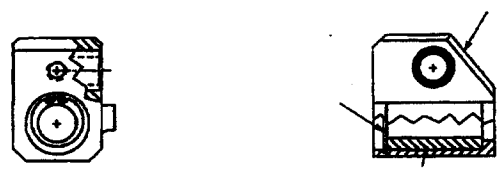

3

14. THIS SECTION FOR GOVERNMENT USE ONLY

a. (X one)

- [ ] (1.) Existing document supplemented by this NOR may be used in manufacture.
- [ ] (2.) Revised document must be received before manufacture may incorporate this change.
- [X] (3.) Custodian of master document shall make above revision and furnish revised document.

b. AUTHORITY AUTHORIZED TO APPROVE CHANGE FOR GOVERNMENT: PM SMALL ARMS OFFICE AMSTA-DSA-SA

c. TYPED NAME (First, Middle Initial, Last): WALTER A. GADOMSKI

d. TITLE: Deputy PM Small Arms

e. SIGNATURE: FOR

f. DATE SIGNED: 4/10/00

15a. ACTIVITY ACCOMPLISHING REVISION

b. REVISION COMPLETED (Signature)

f. DATE SIGNED

DD Form 1695-E, APR 92

Previous editions obsolete.

A

NOTICE OF REVISION (NOR)
THIS REVISION DESCRIBED BELOW HAS BEEN AUTHORIZED FOR THE DOCUMENT LISTED

1. DATE (YYMMDD): 0 0 03 02

Form Approved OMB No. 0704-0188

Public reporting burden for this collection of information is estimated to average 2 hours per response, including the time for reviewing instructions, searching existing data sources, gathering and maintaining the data needed, and completing and reviewing the collection of information. Send comments regarding this burden estimate or any other aspect of this collection of information, including suggestions for reducing this burden, to Department of Defense, Washington Headquarters Services, Directorate for Information Operations and Reports, 1215 Jefferson Davis Highway, Suite 1204, Arlington VA 22202-4302, and to the Office of Management and Budget. Paperwork Reduction Project (0704-0188). Washington DC 20503. PLEASE DO NOT RETURN YOUR COMPLETED FORM TO EITHER OF THESE ADDRESSES. RETURN COMPLETED FORM TO THE GOVERNMENT ISSUING CONTRACTING OFFICER FOR THE CONTRACT/PROCURING ACTIVITY NUMBER LISTED IN ITEM 2 OF THIS FORM.

2. PROCURING ACTIVITY NO.: LOS2007

3. DODAAC:

4. ORIGINATOR
a. TYPED NAME (First, Middle Initial, Last): ROSARIO LO CASCIO
b. ADDRESS (Street, City, State, Zip Code): TACOM-ARDEC, AMSTA-AR-QAC-C, PICATINNY ARSENAL,NJ 07806-5000

5. CAGE CODE: 19200

6. NOR NO.: LOS2007 ~ 8

7. CAGE CODE: 19200

8. DOCUMENT NO.: SQ 6650436

9. TITLE OF DOCUMENT: SLIDER ASSEMBLY,FRONT (LH)

10. REVISION LETTER
a. CURRENT: A
b. NEW: B

11. ECP NO.: LOS2007

12. CONFIGURATION ITEM (OR SYSTEM) TO WHICH ECP APPLIES
MK 93 MOD 1 DUAL MOUNT

13. DESCRIPTION OF REVISION

PAGE 3,INSPECTION POSITION C:

ADD:

MAJOR 108	1.330	DIAMETER	.65	SMTE
MAJOR 109	.056	WIDTH	.65	SMTE
MAJOR 110	1.630	DISTANCE	.65	SMTE

4

14. THIS SECTION FOR GOVERNMENT USE ONLY

a. (X one)
[X] (1) Existing document supplemented by this NOR may be used in manufacture.
[ ] (2) Revised document must be received before manufacturer may incorporate this change.
[ ] (3) Custodian of master document shall make above revision and furnish revised document.

b. ACTIVITY AUTHORIZED TO APPROVE CHANGE FOR GOVERNMENT: PM SMALL ARMS OFFICE AMSTA-LC-MS

c. TYPED NAME (First, Middle Initial, Last): ANTHONY A. GADOWSKI

d. TITLE: DEPUTY PM SMALL ARMS

e. SIGNATURE: For

f. DATE SIGNED (YYMMDD): 4/16/02

15.a. ACTIVITY ACCOMPLISHING REVISION

b. REVISION COMPLETED (Signature)

c. DATE SIGNED (YYMMDD)

DD FORM 1695, APR 92 (EF-V1) (PerFORM PRO) PREVIOUS EDITIONS ARE OBSOLETE.

NOTICE OF REVISION (NOR)

THIS REVISION DESCRIBED BELOW HAS BEEN AUTHORIZED FOR THE DOCUMENT LISTED.

1. DATE (YYMMDD)	990914
Form Approved OMB No. 0704-0188	
2. PROCURING ACTIVITY NO.	LBS2607
3. DODAAC	

Public reporting burden for this collection of information is estimated to average 2 hours per response, including the time for reviewing instructions, searching existing data sources, gathering and maintaining the data needed, and completing the collection of information. Send comments regarding this burden estimate or any other aspect of this collection of information, including suggestions for reducing this burden to Department of Defense, Washington Headquarters Services, Directorate for Information Operations and Reports, 1215 Jefferson Davis Highway, Suite 1204, Arlington, VA 22202-4302, and to the Office of Management and Budget, Paperwork Reduction Project (0704-0188), Washington, DC 20503.
PLEASE DO NOT RETURN YOUR COMPLETED FORM TO EITHER OF THESE ADDRESSES. RETURN COMPLETED FORM TO THE GOVERNMENT ISSUING CONTRACTING OFFICER FOR THE CONTRACT / PROCURING ACTIVITY NUMBER LISTED IN ITEM 2 OF THIS FORM.

4. ORIGINATOR	b. ADDRESS (Street, City, State, Zip Code)	5. CAGE CODE	6. NOR NO.
a. TYPED NAME (First, Middle Initial, Last) R E SMITH	US ARMY ARDEC PICATINNY ARSENAL, NJ	19200	LBS2607-2
		7. CAGE CODE 53711	8. DOCUMENT NO. 6650437
9. TITLE OF DOCUMENT SLIDER ASSY, FRONT (RH)	10. REVISION LETTER a. CURRENT A	b. NEW	11. ECP NO. 99RES007

12. CONFIGURATION ITEM (OR SYSTEM) TO WHICH ECP APPLIES
MK93 MG MOUNT

Sheet 1 of 1

13. DESCRIPTION OF REVISION

IN INTEGRAL PARTS LIST ITEM 4: DELETE "19200".

CHANGE "12972473" TO "MS16625-4125".

ZONES C2,C3: CHANGE DEPICTIONS AS SHOWN BELOW TO REFLECT RETAINING RING CHANGE.

FROM:

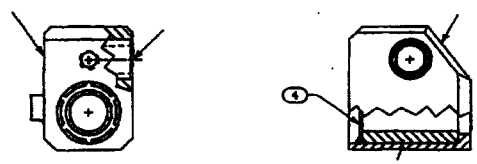

TO:

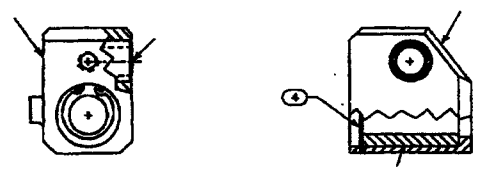

5

14. THIS SECTION FOR GOVERNMENT USE ONLY

a. (X one)
- [ ] (1.) Existing document supplemented by this NOR may be used in manufacture.
- [X] (2.) Revised document must be received before manufacture may incorporate this change.
- [ ] (3.) Custodian of master document shall make above revision and furnish revised document.

b. AUTHORITY AUTHORIZED TO APPROVE CHANGE FOR GOVERNMENT PM SMALL ARMS OFFICE AMSTA-DSA-SA		c. TYPED NAME (First, Middle Initial, Last) WALTER A. GADOMSKI
d. TITLE Deputy PM Small Arms	e. SIGNATURE FOR	f. DATE SIGNED 4/10/00
15a. ACTIVITY ACCOMPLISHING REVISION	b. REVISION COMPLETED (Signature)	f. DATE SIGNED

DD Form 1695-E, APR 92 *Previous editions obsolete.*

A

NOTICE OF REVISION (NOR)
THIS REVISION DESCRIBED BELOW HAS BEEN AUTHORIZED FOR THE DOCUMENT LISTED

1. DATE (YYMMDD): 00 03 02

Form Approved OMB No. 0704-0188

Public reporting burden for this collection of information is estimated to average 2 hours per response, including the time for reviewing instructions, searching existing data sources, gathering and maintaining the data needed, and completing and reviewing the collection of information. Send comments regarding this burden estimate or any other aspect of this collection of information, including suggestions for reducing this burden, to Department of Defense, Washington Headquarters Services, Directorate for Information Operations and Reports, 1215 Jefferson Davis Highway, Suite 1204, Arlington VA 22202-4302, and to the Office of Management and Budget. Paperwork Reduction Project (0704-0188), Washington DC 20503. PLEASE DO NOT RETURN YOUR COMPLETED FORM TO EITHER OF THESE ADDRESSES. RETURN COMPLETED FORM TO THE GOVERNMENT ISSUING CONTRACTING OFFICER FOR THE CONTRACT/PROCURING ACTIVITY NUMBER LISTED IN ITEM 2 OF THIS FORM.

2. PROCURING ACTIVITY NO.: L0S2007

3. DODAAC

4. ORIGINATOR
a. TYPED NAME (First, Middle Initial, Last): ROSARIO LO CASCIO
b. ADDRESS (Street, City, State, Zip Code): TACOM-ARDEC, AMSTA-AR-QAC-C, PICATINNY ARSENAL,NJ 07806-5000

5. CAGE CODE: 19200

6. NOR NO.: L0S2007-9

7. CAGE CODE: 19200

8. DOCUMENT NO.: SQ 6650437

9. TITLE OF DOCUMENT: SLIDER ASSEMBLY,FRONT (RH)

10. REVISION LETTER
a. CURRENT: A
b. NEW: B

11. ECP NO.: L0S2OO7

12. CONFIGURATION ITEM (OR SYSTEM) TO WHICH ECP APPLIES
MK93 MOD 1 DUAL MOUNT

13. DESCRIPTION OF REVISION

PAGE 3,INSPECTION POSITION C:
ADD:

MAJOR 108	1.330	DIAMETER	.65	SMTE
MAJOR 109	.056	WIDTH	.65	SMTE
MAJOR 110	1.630	DISTANCE	.65	SMTE

6

14. THIS SECTION FOR GOVERNMENT USE ONLY

a. (X one)
- [X] (1) Existing document supplemented by this NOR may be used in manufacture.
- [ ] (2) Revised document must be received before manufacturer may incorporate this change.
- [ ] (3) Custodian of master document shall make above revision and furnish revised document.

b. ACTIVITY AUTHORIZED TO APPROVE CHANGE FOR GOVERNMENT: AMSTA-LC-AS

c. TYPED NAME (First, Middle Initial, Last): WALTER A. GADAMSKI

d. TITLE: Deputy PM Small Arms

e. SIGNATURE: [signature] FOR

f. DATE SIGNED (YYMMDD): 4/10/00

15.a. ACTIVITY ACCOMPLISHING REVISION

b. REVISION COMPLETED (Signature)

c. DATE SIGNED (YYMMDD)

DD FORM 1695, APR 92 (EF-V1) (PerFORM PRO) PREVIOUS EDITIONS ARE OBSOLETE.

NOTICE OF REVISION (NOR)

THIS REVISION DESCRIBED BELOW HAS BEEN AUTHORIZED FOR THE DOCUMENT LISTED.

1. DATE (YYMMDD): 990914

Form Approved OMB No. 0704 - 0188

Public reporting burden for this collection of information is estimated to average 2 hours per response, including the time for reviewing instructions, searching existing data sources, gathering and maintaining the data needed, and completing the collection of information. Send comments regarding this burden estimate or any other aspect of this information, including suggestions for reducing this burden to Department of Defense, Washington Headquarters Services, Directorate of Information Operations and Reports, 1215 Jefferson Davis Highway, Suite 1204, Arlington, VA 22202-4302, and to the Office of Management and Budget, Paperwork Reduction Project (0704-0188), Washington, DC 20503.

PLEASE DO NOT RETURN YOUR COMPLETED FORM TO EITHER OF THESE ADDRESSES. RETURN COMPLETED FORM TO THE GOVERNMENT ISSUING CONTRACTING OFFICER FOR THE CONTRACT / PROCURING ACTIVITY NUMBER LISTED IN ITEM 2 OF THIS FORM.

2. PROCURING ACTIVITY NO.: IOS2007

3. DODAAC:

4. ORIGINATOR

a. TYPED NAME (First, Middle Initial, Last): R E SMITH

b. ADDRESS (Street, City, State, Zip Code): US ARMY ARDEC PICATINNY ARSENAL, NJ

5. CAGE CODE: 19200

6. NOR NO.: IOS2007-3

7. CAGE CODE: 53711

8. DOCUMENT NO.: 6650438

9. TITLE OF DOCUMENT: SLIDER ASSY, REAR

10. REVISION LETTER: a. CURRENT: A; b. NEW:

11. ECP NO.: 99RES007

12. CONFIGURATION ITEM (OR SYSTEM) TO WHICH ECP APPLIES: MK93 MG MOUNT

Sheet 1 of 1

13. DESCRIPTION OF REVISION

IN INTEGRAL PARTS LIST ITEM 4: DELETE "19200".

CHANGE "12972473" TO "MS16625-4125".

ZONES C2,C3: CHANGE DEPICTIONS AS SHOWN BELOW TO REFLECT RETAINING RING CHANGE.

FROM:

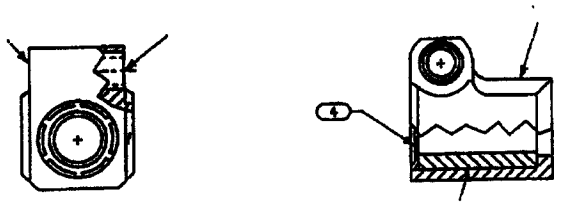

TO:

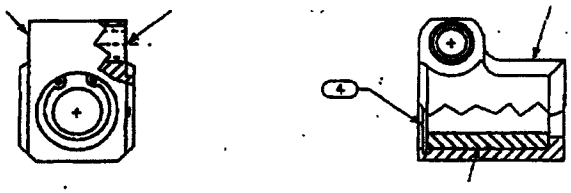

7

14. THIS SECTION FOR GOVERNMENT USE ONLY

a. (X one)
- [X] (1.) Existing document supplemented by this NOR may be used in manufacture.
- [ ] (2.) Revised document must be received before manufacture may incorporate this change.
- [ ] (3.) Custodian of master document shall make above revision and furnish revised document.

b. AUTHORITY AUTHORIZED TO APPROVE CHANGE FOR GOVERNMENT: PM SMALL ARMS OFFICE AMSTA-DSA-SA

c. TYPED NAME (First, Middle Initial, Last): WALTER A. GADOMSKI

d. TITLE: Deputy PM Small Arms

e. SIGNATURE: FOR

f. DATE SIGNED: 4/10/00

15a. ACTIVITY ACCOMPLISHING REVISION

b. REVISION COMPLETED (Signature)

f. DATE SIGNED

DD Form 1695-E, APR 92

Previous editions obsolete.

A

NOTICE OF REVISION (NOR) THIS REVISION DESCRIBED BELOW HAS BEEN AUTHORIZED FOR THE DOCUMENT LISTED	1. DATE (YYMMDD) 00 03 02	Form Approved OMB No. 0704-0188
Public reporting burden for this collection of information is estimated to average 2 hours per response, including the time for reviewing instructions, searching existing data sources, gathering and maintaining the data needed, and completing and reviewing the collection of information. Send comments regarding this burden estimate or any other aspect of this collection of information, including suggestions for reducing this burden, to Department of Defense, Washington Headquarters Services, Directorate for Information Operations and Reports, 1215 Jefferson Davis Highway, Suite 1204, Arlington VA 22202-4302, and to the Office of Management and Budget. Paperwork Reduction Project (0704-0188), Washington DC 20503. PLEASE DO NOT RETURN YOUR COMPLETED FORM TO EITHER OF THESE ADDRESSES. RETURN COMPLETED FORM TO THE GOVERNMENT ISSUING CONTRACTING OFFICER FOR THE CONTRACT/PROCURING ACTIVITY NUMBER LISTED IN ITEM 2 OF THIS FORM.	2. PROCURING ACTIVITY NO. L0S2007 3. DODAAC	

4. ORIGINATOR			
a. TYPED NAME (First, Middle Initial, Last) ROSARIO LO CASCIO	b. ADDRESS (Street, City, State, Zip Code) TACOM-ARDEC AMSTA-AR-QAC-C PICATINNY ARSENAL,NJ,07806-5000	5. CAGE CODE 19200 7. CAGE CODE 19200	6. NOR NO. L0S2007 - 10 8. DOCUMENT NO. SQ 6650438

9. TITLE OF DOCUMENT	10. REVISION LETTER		11. ECP NO.
SLIDER ASSEMBLY,REAR	a. CURRENT A	b. NEW B	L0S2007

12. CONFIGURATION ITEM *(OR SYSTEM)* TO WHICH ECP APPLIES
MK 93 MOD 1 DUAL MOUNT

13. DESCRIPTION OF REVISION

PAGE 3, INSPECTION POSITION B :
ADD :

MAJOR 108	1.330 DIAMETER	.65	SMTE
MAJOR 109	.056 WIDTH	.65	SMTE
MAJOR 110	1.630 DISTANCE	.65	SMTE

8

14. THIS SECTION FOR GOVERNMENT USE ONLY

a. *(X one)*
- [X] (1) Existing document supplemented by this NOR may be used in manufacture.
- [ ] (2) Revised document must be received before manufacturer may incorporate this change.
- [ ] (3) Custodian of master document shall make above revision and furnish revised document.

b. ACTIVITY AUTHORIZED TO APPROVE CHANGE FOR GOVERNMENT	c. TYPED NAME (First, Middle Initial, Last)	
AMSTA-LC-AS	WALTER A. GAWGAWSKI	
d. TITLE DEPUTY PM SMALL ARMS	e. SIGNATURE FOR	f. DATE SIGNED (YYMMDD) 4/10/00
15.a. ACTIVITY ACCOMPLISHING REVISION	b. REVISION COMPLETED *(Signature)*	c. DATE SIGNED (YYMMDD)

DD FORM 1695, APR 92 *(EF-V1)* *(PerFORM PRO)* PREVIOUS EDITIONS ARE OBSOLETE.

NOTICE OF REVISION (NOR)

THIS REVISION DESCRIBED BELOW HAS BEEN AUTHORIZED FOR THE DOCUMENT LISTED.

1. DATE (YYMMDD): 990914

Form Approved
OMB No. 0704 - 0188

Public reporting burden for this collection of information is estimated to average 5 hours per response, including the time for reviewing instructions, searching existing data sources, gathering and maintaining the data needed, and completing the collection of information. Send comments regarding this burden estimate or any other aspect of this information, including suggestions for reducing this burden to Department of Defense, Washington Headquarters Services, Directorate of Information Operations and Reports, 1215 Jefferson Davis Highway, Suite 1204, Arlington, VA 22202-4302, and to the Office of Management and Budget, Paperwork Reduction Project (0704-0188), Washington, DC 20503.
PLEASE DO NOT RETURN YOUR COMPLETED FORM TO EITHER OF THESE ADDRESSES. RETURN COMPLETED FORM TO THE GOVERNMENT ISSUING CONTRACTING OFFICER FOR THE CONTRACT / PROCURING ACTIVITY NUMBER LISTED IN ITEM 2 OF THIS FORM.

2. PROCURING ACTIVITY NO.: I@S2007

3. DODAAC:

4. ORIGINATOR

a. TYPED NAME (First, Middle Initial, Last): R E SMITH

b. ADDRESS (Street, City, State, Zip Code): US ARMY ARDEC PICATINNY ARSENAL, NJ

5. CAGE CODE: 19200

6. NOR NO.: I@S2007-4

7. CAGE CODE: 53711

8. DOCUMENT NO.: 6650440

9. TITLE OF DOCUMENT: SLIDER, REAR

10. REVISION LETTER: a. CURRENT: 8 b. NEW:

11. ECP NO.: 99RES007

12. CONFIGURATION ITEM (OR SYSTEM) TO WHICH ECP APPLIES: MK93 MG MOUNT

Sheet 1 of 1

13. DESCRIPTION OF REVISION

ZONE B3: ADD SECTION LINES AND A-A AS SHOWN BELOW.

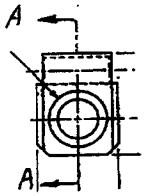

ZONE C2: ADD SECTION A-A AS SHOWN BELOW.

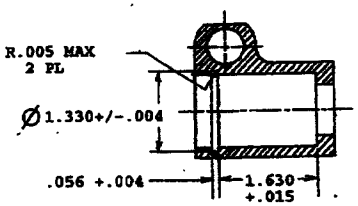

SECTION A-A

9

14. THIS SECTION FOR GOVERNMENT USE ONLY

a. (X one): X (1.) Existing document supplemented by this NOR may be used in manufacture.
(2.) Revised document must be received before manufacture may incorporate this change.
(3.) Custodian of master document shall make above revision and furnish revised document.

b. AUTHORITY AUTHORIZED TO APPROVE CHANGE FOR GOVERNMENT: PM SMALL ARMS OFFICE AMSTA-DSA-SA

c. TYPED NAME (First, Middle Initial, Last): WALTER A. GADOMSKI

d. TITLE: Deputy PM Small Arms

e. SIGNATURE: FOR

f. DATE SIGNED: 4/10/00

15a. ACTIVITY ACCOMPLISHING REVISION

b. REVISION COMPLETED (Signature)

f. DATE SIGNED

DD Form 1695-E, APR 92

Previous editions obsolete.

A

NOTICE OF REVISION (NOR)
THIS REVISION DESCRIBED BELOW HAS BEEN AUTHORIZED FOR THE DOCUMENT LISTED

1. DATE (YYMMDD): 000302

Form Approved OMB No. 0704-0188

Public reporting burden for this collection of information is estimated to average 2 hours per response, including the time for reviewing instructions, searching existing data sources, gathering and maintaining the data needed, and completing and reviewing the collection of information. Send comments regarding this burden estimate or any other aspect of this collection of information, including suggestions for reducing this burden, to Department of Defense, Washington Headquarters Services, Directorate for Information Operations and Reports, 1215 Jefferson Davis Highway, Suite 1204, Arlington VA 22202-4302, and to the Office of Management and Budget, Paperwork Reduction Project (0704-0188), Washington DC 20503. PLEASE DO NOT RETURN YOUR COMPLETED FORM TO EITHER OF THESE ADDRESSES. RETURN COMPLETED FORM TO THE GOVERNMENT ISSUING CONTRACTING OFFICER FOR THE CONTRACT/PROCURING ACTIVITY NUMBER LISTED IN ITEM 2 OF THIS FORM.

2. PROCURING ACTIVITY NO.: LOS2007

3. DODAAC:

4. ORIGINATOR
a. TYPED NAME (First, Middle Initial, Last): ROSARIO LO CASCIO
b. ADDRESS (Street, City, State, Zip Code): TACOM--ARDEC, AMSTA-AR-QAC-C, PICATINNY ARSENAL,NJ 07806-5000

5. CAGE CODE: 19200

6. NOR NO.: LOS2007 - 11

7. CAGE CODE: 19200

8. DOCUMENT NO.: SQ6650450

9. TITLE OF DOCUMENT: MK 93 MOD 0 MOUNT,MACHINE GUN

10. REVISION LETTER
a. CURRENT: A
b. NEW: B

11. ECP NO.: LOS2007

12. CONFIGURATION ITEM (OR SYSTEM) TO WHICH ECP APPLIES
MK 93 MOD1 DUAL MOUNT

13. DESCRIPTION OF REVISION

PAGE 4, INSPECTION POSITION C:

ADD:

MAJOR 106	IMPROPER TORQUE	.65	SMTE

10

14. THIS SECTION FOR GOVERNMENT USE ONLY

a. (X one)
- [X] (1) Existing document supplemented by this NOR may be used in manufacture.
- [ ] (2) Revised document must be received before manufacturer may incorporate this change.
- [ ] (3) Custodian of master document shall make above revision and furnish revised document.

b. ACTIVITY AUTHORIZED TO APPROVE CHANGE FOR GOVERNMENT: AMSTA-LC-AS

c. TYPED NAME (First, Middle Initial, Last): WALTER M. GADOMSKI

d. TITLE: Deputy PM Small Arms

e. SIGNATURE: FOR

f. DATE SIGNED (YYMMDD): 4/10/00

15.a. ACTIVITY ACCOMPLISHING REVISION

b. REVISION COMPLETED (Signature)

c. DATE SIGNED (YYMMDD)

DD FORM 1695, APR 92 (EF-V1) (PerFORM PRO) PREVIOUS EDITIONS ARE OBSOLETE.

NOTICE OF REVISION (NOR)

THIS REVISION DESCRIBED BELOW HAS BEEN AUTHORIZED FOR THE DOCUMENT LISTED.

1. DATE (YYMMDD): 990914

Form Approved OMB No. 0704-0188

Public reporting burden for this collection of information is estimated to average 5 hours per response, including the time for reviewing instructions, searching existing data sources, gathering and maintaining the data needed, and completing and reviewing the collection of information. Send comments regarding this burden estimate or any other aspect of this collection of information, including suggestions for reducing this burden to Department of Defense, Washington Headquarters Services, Directorate for Information Operations and Reports, 1215 Jefferson Davis Highway, Suite 1204, Arlington, VA 22202-4302, and to the Office of Management and Budget, Paperwork Reduction Project (0704-0188), Washington, DC 20503.
PLEASE DO NOT RETURN YOUR COMPLETED FORM TO EITHER OF THESE ADDRESSES. RETURN COMPLETED FORM TO THE GOVERNMENT ISSUING CONTRACTING OFFICER FOR THE CONTRACT / PROCURING ACTIVITY NUMBER LISTED IN ITEM 2 OF THIS FORM.

2. PROCURING ACTIVITY NO.: L0S2007

3. DODAAC:

4. ORIGINATOR

a. TYPED NAME (First, Middle Initial, Last): R E SMITH

b. ADDRESS (Street, City, State, Zip Code): US ARMY ARDEC, PICATINNY ARSENAL, NJ

5. CAGE CODE: 19200

7. CAGE CODE: 53711

6. NOR NO.: L0S2007-5

8. DOCUMENT NO.: 6650451

9. TITLE OF DOCUMENT: SLIDER, FRONT (LH)

10. REVISION LETTER: a. CURRENT: B; b. NEW:

11. ECP NO.: 99RES007

12. CONFIGURATION ITEM (OR SYSTEM) TO WHICH ECP APPLIES: MK93 MG MOUNT

Sheet 1 of 1

13. DESCRIPTION OF REVISION

.ZONE D4: IN SECTION A-A ADD DIMENSIONS AND DEPICTION OF GROOVE AS SHOWN BELOW.

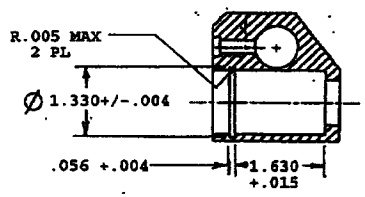

SECTION A-A

11

14. THIS SECTION FOR GOVERNMENT USE ONLY

a. (X one)
- [X] (1.) Existing document supplemented by this NOR may be used in manufacture.
- [ ] (2.) Revised document must be received before manufacture may incorporate this change.
- [ ] (3.) Custodian of master document shall make above revision and furnish revised document.

b. AUTHORITY AUTHORIZED TO APPROVE CHANGE FOR GOVERNMENT: PM SMALL ARMS OFFICE AMSTA-DSA-SA

c. TYPED NAME (First, Middle Initial, Last): WALTER A. GADOMSKI

d. TITLE: Deputy PM Small Arms

e. SIGNATURE: For

f. DATE SIGNED: 9/10/00

15a. ACTIVITY ACCOMPLISHING REVISION

b. REVISION COMPLETED (Signature)

f. DATE SIGNED

DD Form 1695-E, APR 92

Previous editions obsolete.

A

NOTICE OF REVISION (NOR)

THIS REVISION DESCRIBED BELOW HAS BEEN AUTHORIZED FOR THE DOCUMENT LISTED.

1. DATE (YYMMDD): 990914

Form Approved
OMB No. 0704 - 0188

Public reporting burden for this collection of information is estimated to average 2 hours per response, including the time for reviewing instructions, searching existing data sources, gathering and maintaining the data needed, and completing and reviewing the collection of information. Send comments regarding this burden estimate or any other aspect of this collection of information, including suggestions for reducing this burden to Department of Defense, Washington Headquarters Services, Directorate for Information Operations and Reports, 1215 Jefferson Davis Highway, Suite 1204, Arlington, VA 22202-4302, and to the Office of Management and Budget, Paperwork Reduction Project (0704-0188), Washington, DC 20503.

PLEASE DO NOT RETURN YOUR COMPLETED FORM TO EITHER OF THESE ADDRESSES. RETURN COMPLETED FORM TO THE GOVERNMENT ISSUING CONTRACTING OFFICER FOR THE CONTRACT / PROCURING ACTIVITY NUMBER LISTED IN ITEM 2 OF THIS FORM.

2. PROCURING ACTIVITY NO.: L0S2667

3. DODAAC:

4. ORIGINATOR

a. TYPED NAME (First, Middle Initial, Last): R. E. SMITH

b. ADDRESS (Street, City, State, Zip Code): US ARMY ARDEC, PICATINNY ARSENAL, NJ

5. CAGE CODE: 19200

6. NOR NO.: L0S2667-5

7. CAGE CODE: 53711

8. DOCUMENT NO.: 6650452

9. TITLE OF DOCUMENT: SLIDER, FRONT (RH)

10. REVISION LETTER: a. CURRENT: B; b. NEW:

11. ECP NO.: 99RES007

12. CONFIGURATION ITEM (OR SYSTEM) TO WHICH ECP APPLIES: MK93 MG MOUNT

Sheet 1 of 1

13. DESCRIPTION OF REVISION

.ZONE D4: IN SECTION A-A ADD DIMENSIONS AND DEPICTION OF GROOVE AS SHOWN BELOW.

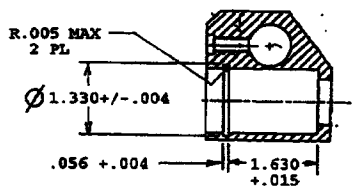

SECTION A-A

12

14. THIS SECTION FOR GOVERNMENT USE ONLY

a. (X one)
- [ ] (1.) Existing document supplemented by this NOR may be used in manufacture.
- [ ] (2.) Revised document must be received before manufacture may incorporate this change.
- [ ] (3.) Custodian of master document shall make above revision and furnish revised document.

b. AUTHORITY AUTHORIZED TO APPROVE CHANGE FOR GOVERNMENT: PM SMALL ARMS OFFICE AMSTA-DSA-SA

c. TYPED NAME (First, Middle Initial, Last): MASTER A. GADOMSKI

d. TITLE: Deputy PM Small Arms

e. SIGNATURE: For

f. DATE SIGNED: 4/10/00

15a. ACTIVITY ACCOMPLISHING REVISION

b. REVISION COMPLETED (Signature)

f. DATE SIGNED

DD Form 1695-E, APR 92

Previous editions obsolete.

A

NOTICE OF REVISION (NOR)
THIS REVISION DESCRIBED BELOW HAS BEEN AUTHORIZED FOR THE DOCUMENT LISTED

1. DATE (YYMMDD): 00 03 01

Form Approved OMB No. 0704-0188

Public reporting burden for this collection of information is estimated to average 2 hours per response, including the time for reviewing instructions, searching existing data sources, gathering and maintaining the data needed, and completing and reviewing the collection of information. Send comments regarding this burden estimate or any other aspect of this collection of information, including suggestions for reducing this burden, to Department of Defense, Washington Headquarters Services, Directorate for Information Operations and Reports, 1215 Jefferson Davis Highway, Suite 1204, Arlington VA 22202-4302, and to the Office of Management and Budget, Paperwork Reduction Project (0704-0188), Washington DC 20503. PLEASE DO NOT RETURN YOUR COMPLETED FORM TO EITHER OF THESE ADDRESSES. RETURN COMPLETED FORM TO THE GOVERNMENT ISSUING CONTRACTING OFFICER FOR THE CONTRACT/PROCURING ACTIVITY NUMBER LISTED IN ITEM 2 OF THIS FORM.

2. PROCURING ACTIVITY NO.: L0S9007

3. DODAAC:

4. ORIGINATOR
a. TYPED NAME (First, Middle Initial, Last): ROSARIO LO CASCIO
b. ADDRESS (Street, City, State, Zip Code): TACOM-ARDEC, AMSTA-AR-QAC-C, PICATINNY ARSENAL,NJ 07806-5000

5. CAGE CODE: 19200

6. NOR NO.: L0S9007 -12

7. CAGE CODE: 19200

8. DOCUMENT NO.: SQ665048D

9. TITLE OF DOCUMENT: ADJUSTABLE ARM

10. REVISION LETTER
a. CURRENT: A
b. NEW: B

11. ECP NO.: L0S9007

12. CONFIGURATION ITEM (OR SYSTEM) TO WHICH ECP APPLIES
MK64 MOD 9 MOUNT

13. DESCRIPTION OF REVISION

PAGE 3

CHANGE MINOR 204 FROM: .492 DIAMETER TO : .495 DIAMETER

13

14. THIS SECTION FOR GOVERNMENT USE ONLY

a. (X one)
[X] (1) Existing document supplemented by this NOR may be used in manufacture.
[ ] (2) Revised document must be received before manufacturer may incorporate this change.
[ ] (3) Custodian of master document shall make above revision and furnish revised document.

b. ACTIVITY AUTHORIZED TO APPROVE CHANGE FOR GOVERNMENT: AMSTA-LC-AS

c. TYPED NAME (First, Middle Initial, Last): WALTER A. CABOWSKI

d. TITLE: Deputy PM Small Arms

e. SIGNATURE: FOR

f. DATE SIGNED (YYMMDD): 4/10/00

15.a. ACTIVITY ACCOMPLISHING REVISION

b. REVISION COMPLETED (Signature)

c. DATE SIGNED (YYMMDD)

DD FORM 1695, APR 92 (EF-V1) (PerFORM PRO) PREVIOUS EDITIONS ARE OBSOLETE.

NOTICE OF REVISION (NOR)

THIS REVISION DESCRIBED BELOW HAS BEEN AUTHORIZED FOR THE DOCUMENT LISTED.

1. DATE (YYMMDD): 990914

Form Approved OMB No. 0704 - 0188

Public reporting burden for this collection of information is estimated to average 5 hours per response, including the time for reviewing instructions, searching existing data sources, gathering and maintaining the data needed, and completing and reviewing the collection of information. Send comments regarding this burden estimate or any other aspect of this collection of information, including suggestions for reducing this burden to Department of Defense, Washington Headquarters Services, Directorate for Information Operations and Reports, 1215 Jefferson Davis Highway, Suite 1204, Arlington, VA 22202-4302, and to the Office of Management and Budget, Paperwork Reduction Project (0704-0188), Washington, DC 20503.
PLEASE DO NOT RETURN YOUR COMPLETED FORM TO EITHER OF THESE ADDRESSES. RETURN COMPLETED FORM TO THE GOVERNMENT ISSUING CONTRACTING OFFICER FOR THE CONTRACT / PROCURING ACTIVITY NUMBER LISTED IN ITEM 2 OF THIS FORM.

2. PROCURING ACTIVITY NO.: L0S2007

3. DODAAC:

4. ORIGINATOR

a. TYPED NAME (First, Middle Initial, Last): R E SMITH

b. ADDRESS (Street, City, State, Zip Code): US ARMY ARDEC PICATINNY ARSENAL, NJ

5. CAGE CODE: 19200

6. NOR NO.: L0S2007-7

7. CAGE CODE: 53711

8. DOCUMENT NO.: 6650725

9. TITLE OF DOCUMENT: CARRIAGE ASSY

10. REVISION LETTER

a. CURRENT: C

b. NEW:

11. ECP NO.: 99RES007

12. CONFIGURATION ITEM (OR SYSTEM) TO WHICH ECP APPLIES: MK93 MG MOUNT

Sheet 1 of 1

13. DESCRIPTION OF REVISION

NOTE 2: CHANGE FROM "TIGHTEN ALL BOLTS/SCREWS/NUTS USING ACCEPTED COMMERCIAL PRACTICES."

TO "TIGHTEN FN 5 TO FN 2 TO 250+/-25 FT-LBS TORQUE."

INTEGRATED PARTS:

CHANGE ITEM 3 FROM "3	1	AN960XC1616	WASHER, FLAT"
TO "3	1	MS35333-83	WASHER, LOCK"

14

14. THIS SECTION FOR GOVERNMENT USE ONLY

a. (X one)

- [X] (1.) Existing document supplemented by this NOR may be used in manufacture.
- [ ] (2.) Revised document must be received before manufacture may incorporate this change.
- [ ] (3.) Custodian of master document shall make above revision and furnish revised document.

b. AUTHORITY AUTHORIZED TO APPROVE CHANGE FOR GOVERNMENT: PM SMALL ARMS OFFICE AMSTA-DSA-SA

c. TYPED NAME (First, Middle Initial, Last): WALTER A. GADOMSKI

d. TITLE: Deputy PM Small Arms

e. SIGNATURE:

f. DATE SIGNED: 4/10/00

15a. ACTIVITY ACCOMPLISHING REVISION

b. REVISION COMPLETED (Signature)

f. DATE SIGNED

DD Form 1695-E, APR 92

Previous editions obsolete.

A

CONFIGURATION CONTROL BOARD DIRECTIVE

1. PAN: L0S2007

2. CONFIGURATION ITEM / PART NUMBER: MK93 Mount, 6658436

3. CCB NAME / LEVEL / DATE: Small Arms Weapons / 16 Feb 00

4. TYPE OF ACTION
- [X] ECP
- [ ] VECP
- [ ] RFW
- [ ] VEP
- [ ] RFD
- [ ] OTHER:

5. ACTION ORIGINATOR NAME: AMSTA-AR-CCL

6. ACTION ORIGINATOR NUMBER AND DATE:

7. COORDINATION WITH COMBAT DEVELOPER
Determine by completing a Combat Developer Coordination Checksheet for all Class I ECPs for type classified items.

INFORMAL SCHOOL CODES FOR NOTIFICATION
- [ ] NO
- [ ] 01
- [ ] 02
- [ ] 03
- [X] 04
- [ ] 05
- [ ] 06
- [ ] 07
- [ ] 08
- [ ] 09
- [ ] OTHER _____

FORMAL
- [ ] YES
- [ ] NO

8. SYNOPSIS OF CHANGE

Add slot in the Slider Assembly to allow placement of a snap ring.

9. MODIFICATION TO SUBMITTED ACTION
- [ ] NONE
- [ ] REVISION
- [ ] CORRECTION
- [ ] SEE PAGE ___

10. POSITION ON RECOMMENDATION TO CONFIGURATION MANAGER

OFFICE SYMBOL	SIGNATURE	CONCUR YES	CONCUR NO	OFFICE SYMBOL	SIGNATURE	CONCUR YES	CONCUR NO
AMSTA-AR-ESW-S	[illegible]	X		AMSTA-LC-RS	C. DAVIDSON	X	
AMSTA-LC-CST	N/A INPUT						
AMSTA-AC-DLALO	No INPUT						
AMSTA-AR-QAW-C	[illegible]	X					
NVLNO	N/A INPUT						
AFLNO	CMSgt Fender	X					
AMSTA-LC-CSC-A	S. Fitzer	X					
MCLNO-LMC	[illegible]	X					
AMSTA-LC-CSIH	[illegible]	X					
AMSTA-AR-ESK	D. Piskorik	X					

11. REMARKS

Approve as Modified

See attached sheet

15

12a. ECP CLASSIFICATION
- [X] I
- [ ] II

12b. RFW / RFD DESIGNATION
- [ ] CRITICAL
- [ ] MAJOR
- [ ] MINOR

12c. RECURRING RFD / RFW?
- [ ] NO
- [ ] YES - ECP REQUIRED
  - [ ] YES
  - [ ] NO

12d. ECP RESULTS FROM RFW / RFD
- [ ] YES
- [X] NO

12e. COST IMPACT
- [ ] NONE
- [ ] INCREASE $ _____
- [ ] DECREASE $ _____

13a. CHAIRMAN RECOMMENDATION
- [ ] APPROVE
- [X] APPROVE AS MODIFIED
- [ ] DISAPPROVE
- [ ] OTHER

13b. CCB CHAIRMAN: [signature]
LOREN BRUNTON, Chief, Small Arms Engr Team
PRINTED / TYPED NAME, OFFICE SYMBOL AND SIGNATURE

13c. DATE: 2/22/00

13d. TELEPHONE: 28100

14a. DECISION ON ACTION
- [ ] APPROVE
- [X] APPROVE AS MODIFIED
- [ ] DISAPPROVE
- [ ] OTHER

14b. CONFIGURATION MANAGER: [signature]
Walter A. Gadomski, PM Small Arms Office, AMSTA-DSA-SA
PRINTED / TYPED NAME, OFFICE SYMBOL AND SIGNATURE

14c. DATE: 4/10/00

14d. TELEPHONE: 880-6964

CONFIGURATION CONTROL BOARD DIRECTIVE | 1. PAN L0S2007

11. Remarks, continued:

a. CCB BOARD RECOMMENDATION W/RATIONALE:

Approve as Modified: This ECP adds grooves to both the left and right hand slider assemblies to allow placement of a snap ring. The snap ring will keep the internal retaining ring (star washer) from slidding out of the assembly during cyclic firing of a weapon.

b. MODIFICATIONS/CORRECTIONS:

AMSTA-AR-CCL shall coordinate with AMSTA-AR-QA to determine if changes to the QAP's, affecting both slider assemblies, is need. If so, then AMSTA-AR-CCL shall add the appropriate QAP changes to this ECP before forwarding on to the configuration manager.

c. QAP CHANGES NEEDED/INCLUDED: NA

d. TM AFFECTED: None

e. OTHER SYSTEMS AFFECTED: None

f. FINANCIAL REQUIREMENTS: $ NA

g. CONTRACTS AFFECTED: DAAE20-99-D-0139

h. IMPLEMENTATION INSTRUCTIONS: AMSTA-LC-CSC-A shall incorporate this ECP into the contracts mentioned in above paragraph g.

FOR ECPS:

☐ OPTIONAL

☒ MANDATORY

☐ WITHOUT/ ☐ WITH OBSOLESCENCE

☐ NO COST ☒ COST NTE $ 1,000

☐ FIRST ARTICLE TEST /INSPECTION RECOMMENDED

i. READINESS IMPACT: None

j. EOD IMPACT: None

k. VE SAVINGS: NA

l. RATIONALE/CALCULATIONS FOR COST CONCESSION (RFW) OR CONTRACTUAL COST ADJUSTMENT (RFD, ECP, VECP):

TOTAL $ ± %

16

n. OZONE DEPLETING SUBSTANCE ELIMINATED: YES ☐ NO ☒

O. TMDE SMALL ARM GAGES AFFECTED: YES ☐ COPY FURNISH AMSMI-TMDE-GA-P NO ☒

CONFIGURATION CONTROL BOARD DIRECTIVE
DESIGN ACTIVITY EVALUATION

1. PAN: L0S2007

2a. TYPE ITEM
- [ ] TRANSFERRED
- [X] PROJECT MANAGED
- [ ] OTHER_____

2b. TYPE ACTION
- [X] ECP
- [ ] VEP
- [ ] VECP
- [ ] RFD
- [ ] RFW
- [ ] OTHER_____

3a. CONTRACT(s) AFFECTED

3b. SOLICITATION(s) AFFECTED

4. APPLICATION
- [X] Apply to current contracts/solicitations
- [X] Apply to future applications
- [ ] Formalizes change previously authorized via: _____
- [ ] Associated or Interface Changes as listed in remarks.

RETROFIT BY:
- [ ] Attrition
- [ ] Minor Alteration
- [ ] MWO

5. COST IMPACT
- [ ] NONE
- [X] INCREASE $_____
- [ ] DECREASE $_____

6a. RECOMMENDATION TO CONFIGURATION MANAGER:
- [X] APPROVE
- [X] APPROVE WITH MODIFICATION
- [ ] DISAPPROVE
- [ ] OTHER:_____

6b. MODIFICATION(s) TO SUBMITTED ACTION
- [ ] NONE
- [X] AS FOLLOWS:

QAP Changes Added

7. POSITION ON RECOMMENDATION TO CONFIGURATION MANAGER

DOCUMENTS/* DISCIPLINE	IMPACTED YES	IMPACTED NO	OFFICE SYMBOL	TELEPHONE	TYPED/PRINTED NAME AND SIGNATURE	CONCUR YES	CONCUR NO
PRODUCT DRAWINGS	X		AMSTA-AR-CCL-A	880-7096	F DAHDOUH	✓	
SPECIFICATIONS/ QAPs	X		AMSTA-AR-QAC-C	880-4409	R LOCASCIO Rosario Lo Cascio	X	
PACKAGING DATA			AMSTA-AR-AEP	880-2570	B TORPPEY by Phone	X	
SOFTWARE							
MAINTENANCE							
OTHER (Specify)							
VALUE ENGINEERING							

* NOTE: A Notice of Revision (NOR) is required for each document needing revision when a change is recommended for approval.

8. REMARKS

ECP PROPOSES TO ADD SNAP RINGS TO RETAIN SLIDER BEARINGS IN MX93 MOUNT AND TO ADD TORQUE REQUIREMENT TO AVOID PINTLE NUT LOOSENING.

17

9a. OFFICE SYMBOL	9b. TYPED/PRINTED NAME AND TITLE	9c. SIGNATURE	9d. DATE
AMSTA-AR-CCL-A	R E SMITH GENERAL ENGINEER	R E Smith	7 Mar 00
			9e. TELEPHONE DSN 880-6064

attachment 005

ENGINEERING CHANGE PROPOSAL (ECP), PAGE 1

1. DATE (YYMMDD): 001227

Form Approved OMB No. 0704-0188

Public reporting burden for this collection of information is estimated to average 2 hours per response, including the time for reviewing instructions, searching existing data sources, gathering and maintaining the data needed, and completing and reviewing the collection of information. Send comments regarding this burden estimate or any other aspect of this collection of information, including suggestions for reducing this burden, to Department of Defense, Washington Headquarters Services, Directorate for Information Operations and Reports, 1215 Jefferson Davis Highway, Suite 1204, Arlington, VA 22202-4302, and to the Office of Management and Budget, Paperwork Reduction Project (0704-0188), Washington, DC 20503.
PLEASE DO NOT RETURN YOUR COMPLETED FORM TO EITHER OF THESE ADDRESSES. RETURN COMPLETED FORM TO THE GOVERNMENT ISSUING CONTRACTING OFFICER FOR THE CONTRACT / PROCURING ACTIVITY NUMBER LISTED IN ITEM 2 OF THIS FORM.

2. PROCURING ACTIVITY NO.: L0S2049

3. DODAAC:

4. ORIGINATOR
a. TYPED NAME (First, Middle Initial, Last): Charles E. Pluviose
b. ADDRESS (Street, City, State, Zip Code): AMSTA-AR-CCL-A (TACOM-ARDEC) Picatinny Arsenal, NJ 07806-5000

5. CLASS OF ECP: [redacted]

6. JUST. CODE: C

7. PRIORITY: R

8. ECP DESIGNATION
a. MODEL/TYPE: M.T.
b. CAGE CODE: 19200
c. SYSTEM DESIGNATION: MT, MG, MK 64
d. ECP NO.: L0S2049
e. TYPE:
f. REV:

9. BASELINE AFFECTED: [ ] FUNCTIONAL [X] PRODUCT [ ] ALLOCATED

10. OTHER SYS./CONFIG. ITEMS AFFECTED: [ ] YES [ ] NO

11. SPECIFICATIONS AFFECTED

	CAGE Code	Specification/Document No.	Rev.	SCN
a. SYSTEM				
b. DEVELOPMENT				
c. PRODUCT				

12. DRAWINGS AFFECTED

CAGE Code	Number	Rev.	NOR
	see attached NOR		

13. TITLE OF CHANGE: Drawing update

14. CONTRACT NO. AND LINE ITEM:

15. PROCURING CONTRACTING OFFICER
a. NAME (First, Middle Initial, Last):
b. CODE:
c. TELEPHONE NO.:

16. CONFIGURATION ITEM NOMENCLATURE: TRIPOD MOUNT

17. IN PRODUCTION: [X] YES [ ] NO

18. ALL LOWER LEVEL ITEMS AFFECTED
a. NOMENCLATURE: SEE NORs
b. PART NO.:
c. NSN:

21 MAR 2000

3/20/01

19. DESCRIPTION OF CHANGE
To eliminate redundant drawings.

20. NEED FOR CHANGE
To replace identical drawings that have seperate drawing and stock numbers by one drawing and stock number.

21. PRODUCTION EFFECTIVITY BY SERIAL NUMBER: N/A

22. EFFECT ON PRODUCTION DELIVERY SCHEDULE: N/A

23. RETROFIT
a. RECOMMENDED ITEM EFFECTIVITY: N/A
b. SHIP / VECHICLE CLASS AFFECTED: N/A
c. ESTIMATED KIT DELIVERY SCHEDULE: N/A
d. LOCATIONS OR SHIP / VEHICLE NUMBERS AFFECTED: N/A

24. ESTIMATED COSTS / SAVINGS UNDER CONTRACT: N/A

25. ESTIMATED NET TOTAL COSTS / SAVINGS: N/A

26. SUBMITTING ACTIVITY
a. AUTHORIZED SIGNATURE:
b. TITLE: MECHANICAL ENGINEER

27. APPROVAL / ~~DISAPPROVAL~~ as modified
a. CLASS I: [ ] APPROVAL RECOMMENDED [ ] DISAPPROVAL RECOMMENDED
b. CLASS II: [ ] APPROVED [ ] DISAPPROVED
c. CLASS II: [ ] CONCUR IN CLASSIFICATION OF CHANGE [ ] DO NOT CONCUR IN CLASSIFICATION OF CHANGE
d. GOVERNMENT ACTIVITY:
e. SIGNATURE:
f. DATE SIGNED (YYMMDD):
g. APPROVAL: [X] APPROVED as modified [ ] DISAPPROVED
h. GOVERNMENT ACTIVITY: TACOM-ARDEC, AMSTA-AR-CCL-F
i. SIGNATURE: Ronald E. Elbe, Chief, CCAC Prod & Field Spt Team
j. DATE SIGNED (YYMMDD): 010405

DD Form 1692, APR 92 — Previous editions are obsolete. — DISTRIBUTION STATEMENT A : UNLIMITED — USAPPC V1.00

NOTICE OF REVISION (NOR)
THIS REVISION DESCRIBED BELOW HAS BEEN AUTHORIZED FOR THE DOCUMENT LISTED

1. DATE (YYMMDD): 1 12 27

Form Approved OMB No. 0704-0188

Public reporting burden for this collection of information is estimated to average 2 hours per response, including the time for reviewing instructions, searching existing data sources, gathering and maintaining the data needed, and completing and reviewing the collection of information. Send comments regarding this burden estimate or any other aspect of this collection of information, including suggestions for reducing this burden, to Department of Defense, Washington Headquarters Services, Directorate for Information Operations and Reports, 1215 Jefferson Davis Highway, Suite 1204, Arlington VA 22202-4302, and to the Office of Management and Budget, Paperwork Reduction Project (0704-0188), Washington DC 20503. PLEASE DO NOT RETURN YOUR COMPLETED FORM TO EITHER OF THESE ADDRESSES. RETURN COMPLETED FORM TO THE GOVERNMENT ISSUING CONTRACTING OFFICER FOR THE CONTRACT/PROCURING ACTIVITY NUMBER LISTED IN ITEM 2 OF THIS FORM.

2. PROCURING ACTIVITY NO.: L0S2049

3. DODAAC:

4. ORIGINATOR
a. TYPED NAME (First, Middle Initial, Last): Charles E. Pluviose

b. ADDRESS (Street, City, State, Zip Code): AMSTA-AR-CCL-A (TACOM-ARDEC) Picatinny Arsenal, NJ 07806-5000

5. CAGE CODE: 19200

6. NOR NO.: 001

7. CAGE CODE: 19200

8. DOCUMENT NO.: 5I4I081

9. TITLE OF DOCUMENT: SPACING COLLAR

10. REVISION LETTER
a. CURRENT:
b. NEW:

11. ECP NO.: L0S2049

12. CONFIGURATION ITEM (OR SYSTEM) TO WHICH ECP APPLIES
MT,MG,MK64

13. DESCRIPTION OF REVISION

NOTE 4:
ADD: 5830116 - MT, MG, MK64.

14. THIS SECTION FOR GOVERNMENT USE ONLY

a. (X one)
- [X] (1) Existing document supplemented by this NOR may be used in manufacture.
- [ ] (2) Revised document must be received before manufacturer may incorporate this change.
- [ ] (3) Custodian of master document shall make above revision and furnish revised document.

b. ACTIVITY AUTHORIZED TO APPROVE CHANGE FOR GOVERNMENT: TACOM-ARDEC, AMSTA-AR-CCL-F

c. TYPED NAME (First, Middle Initial, Last):

d. TITLE
for Ronald E. Elbe
Chief, CCAC Prod & Field Spt Team

e. SIGNATURE: Joseph C. Vaj

f. DATE SIGNED (YYMMDD): 010405

15.a. ACTIVITY ACCOMPLISHING REVISION

b. REVISION COMPLETED (Signature)

c. DATE SIGNED (YYMMDD)

DD FORM 1695, APR 92 (EF-V1) PerFORM PRO

PREVIOUS EDITIONS ARE OBSOLETE.

DISTRIBUTION STATEMENT A : UNLIMITED

NOTICE OF REVISION (NOR)

THIS REVISION DESCRIBED BELOW HAS BEEN AUTHORIZED FOR THE DOCUMENT LISTED

1. DATE (YYMMDD)

Form Approved OMB No. 0704-0188

Public reporting burden for this collection of information is estimated to average 2 hours per response, including the time for reviewing instructions, searching existing data sources, gathering and maintaining the data needed, and completing and reviewing the collection of information. Send comments regarding this burden estimate or any other aspect of this collection of information, including suggestions for reducing this burden, to Department of Defense, Washington Headquarters Services, Directorate for Information Operations and Reports, 1215 Jefferson Davis Highway, Suite 1204, Arlington VA 22202-4302, and to the Office of Management and Budget. Paperwork Reduction Project (0704-0188), Washington DC 20503. PLEASE DO NOT RETURN YOUR COMPLETED FORM TO EITHER OF THESE ADDRESSES. RETURN COMPLETED FORM TO THE GOVERNMENT ISSUING CONTRACTING OFFICER FOR THE CONTRACT/PROCURING ACTIVITY NUMBER LISTED IN ITEM 2 OF THIS FORM.

2. PROCURING ACTIVITY NO.
LOS2049

3. DODAAC

4. ORIGINATOR
a. TYPED NAME (First, Middle Initial, Last)
Charles E. Pluviose

b. ADDRESS (Street, City, State, Zip Code)
AMSTA-AR-CCL-A (TACOM-ARDEC)
Picatinny Arsenal, NJ 07806-5000

5. CAGE CODE
19200

6. NOR NO.
002

7. CAGE CODE
19200

8. DOCUMENT NO.
5830116

9. TITLE OF DOCUMENT
PINTLE LOCK ASSEMBLY

10. REVISION LETTER
a. CURRENT
b. NEW

11. ECP NO.
LOS2049

12. CONFIGURATION ITEM (OR SYSTEM) TO WHICH ECP APPLIES
MT,MG,MK64

13. DESCRIPTION OF REVISION

ZONE B1:
DELETE NO.: 5830120
REPLACE IT BY: 5141081

DELETE : 5830117
REPLACE IT BY: 5141121

14. THIS SECTION FOR GOVERNMENT USE ONLY

a. (X one)
[X] (1) Existing document supplemented by this NOR may be used in manufacture.
[ ] (2) Revised document must be received before manufacturer may incorporate this change.
[ ] (3) Custodian of master document shall make above revision and furnish revised document.

b. ACTIVITY AUTHORIZED TO APPROVE CHANGE FOR GOVERNMENT
TACOM-ARDEC, PICATINNY, NJ

c. TYPED NAME (First, Middle Initial, Last)

d. TITLE
for Ronald E. Elbe
Chief, CCAC Prod & Field Spt Team

e. SIGNATURE

f. DATE SIGNED (YYMMDD)
010405

15.a. ACTIVITY ACCOMPLISHING REVISION

b. REVISION COMPLETED (Signature)

c. DATE SIGNED (YYMMDD)

DD FORM 1695, APR 92 (EF-V1) (PerFORM PRO)

PREVIOUS EDITIONS ARE OBSOLETE.

DISTRIBUTION STATEMENT A : UNLIMITED

NOTICE OF REVISION (NOR)
THIS REVISION DESCRIBED BELOW HAS BEEN AUTHORIZED FOR THE DOCUMENT LISTED

1. DATE (YYYMMDD)

Form Approved OMB No. 0704-0188

Public reporting burden for this collection of information is estimated to average 2 hours per response, including the time for reviewing instructions, searching existing data sources, gathering and maintaining the data needed, and completing and reviewing the collection of information. Send comments regarding this burden estimate or any other aspect of this collection of information, including suggestions for reducing this burden, to Department of Defense, Washington Headquarters Services, Directorate for Information Operations and Reports, 1215 Jefferson Davis Highway, Suite 1204, Arlington VA 22202-4302, and to the Office of Management and Budget, Paperwork Reduction Project (0704-0188), Washington DC 20503. PLEASE DO NOT RETURN YOUR COMPLETED FORM TO EITHER OF THESE ADDRESSES. RETURN COMPLETED FORM TO THE GOVERNMENT ISSUING CONTRACTING OFFICER FOR THE CONTRACT/PROCURING ACTIVITY NUMBER LISTED IN ITEM 2 OF THIS FORM.

2. PROCURING ACTIVITY NO.
L0S2049

3. DODAAC

4. ORIGINATOR
a. TYPED NAME (First, Middle Initial, Last)
Charles E. Pluviose

b. ADDRESS (Street, City, State, Zip Code)
AMSTA-AR-CCL-A (TACOM-ARDEC)
Picatinny Arsenal, NJ 07806-5000

5. CAGE CODE
19200

6. NOR NO.
003

7. CAGE CODE
19200

8. DOCUMENT NO.
5141121

9. TITLE OF DOCUMENT
PINTLE LOCK BODY

10. REVISION LETTER
a. CURRENT
b. NEW

11. ECP NO.
L0S2049

12. CONFIGURATION ITEM (OR SYSTEM) TO WHICH ECP APPLIES
MT,MG,MK64

13. DESCRIPTION OF REVISION

APPLICATION BLOCK :
ADD: 5830116 - MT, MG, MK64

Change:
Zone C-1: 2 places

From: ".3125"
To: ".312"

14. THIS SECTION FOR GOVERNMENT USE ONLY
a. (X one)
[X] (1) Existing document supplemented by this NOR may be used in manufacture.
[ ] (2) Revised document must be received before manufacturer may incorporate this change.
[ ] (3) Custodian of master document shall make above revision and furnish revised document.

b. ACTIVITY AUTHORIZED TO APPROVE CHANGE FOR GOVERNMENT
TACOM-ARDEC, AMSTA-AR-CCL-F

c. TYPED NAME (First, Middle Initial, Last)

d. TITLE
for Ronald E. Elbe
Chief, CCAC Prod & Field Spt Team

e. SIGNATURE
Joseph C. Vaz

f. DATE SIGNED (YYYMMDD)
010405

15.a. ACTIVITY ACCOMPLISHING REVISION

b. REVISION COMPLETED (Signature)

c. DATE SIGNED (YYYMMDD)

DD FORM 1695, APR 92 (EF-V1) (PerFORM PRO)

PREVIOUS EDITIONS ARE OBSOLETE.

DISTRIBUTION STATEMENT A : UNLIMITED

NOTICE OF REVISION (NOR)
THIS REVISION DESCRIBED BELOW HAS BEEN AUTHORIZED FOR THE DOCUMENT LISTED

1. DATE (YYMMDD): 1 12 27

Form Approved OMB No. 0704-0188

Public reporting burden for this collection of information is estimated to average 2 hours per response, including the time for reviewing instructions, searching existing data sources, gathering and maintaining the data needed, and completing and reviewing the collection of information. Send comments regarding this burden estimate or any other aspect of this collection of information, including suggestions for reducing this burden, to Department of Defense, Washington Headquarters Services, Directorate for Information Operations and Reports, 1215 Jefferson Davis Highway, Suite 1204, Arlington VA 22202-4302, and to the Office of Management and Budget, Paperwork Reduction Project (0704-0188), Washington DC 20503. PLEASE DO NOT RETURN YOUR COMPLETED FORM TO EITHER OF THESE ADDRESSES. RETURN COMPLETED FORM TO THE GOVERNMENT ISSUING CONTRACTING OFFICER FOR THE CONTRACT/PROCURING ACTIVITY NUMBER LISTED IN ITEM 2 OF THIS FORM.

2. PROCURING ACTIVITY NO.: L0S2049

3. DODAAC:

4. ORIGINATOR
a. TYPED NAME (First, Middle Initial, Last): Charles E. Pluviose
b. ADDRESS (Street, City, State, Zip Code): AMSTA-AR-CCL-A (TACOM-ARDEC) Picatinny Arsenal, NJ 07806-5000

5. CAGE CODE: 19200

6. NOR NO.: 004

7. CAGE CODE: 19200

8. DOCUMENT NO.: 8403398

9. TITLE OF DOCUMENT: MOUNT,TRIPOD,MACHINE GUN: CAL .50, M3

10. REVISION LETTER
a. CURRENT:
b. NEW:

11. ECP NO.: L0S2049

12. CONFIGURATION ITEM (OR SYSTEM) TO WHICH ECP APPLIES
MT, MG, MK64

13. DESCRIPTION OF REVISION

ZONE B4:

CHANGE :

FROM : MECHANISM ASSY 5574621

TO: MECHANISM ASSY 5830128

14. THIS SECTION FOR GOVERNMENT USE ONLY

a. (X one)
- [X] (1) Existing document supplemented by this NOR may be used in manufacture.
- [ ] (2) Revised document must be received before manufacturer may incorporate this change.
- [ ] (3) Custodian of master document shall make above revision and furnish revised document.

b. ACTIVITY AUTHORIZED TO APPROVE CHANGE FOR GOVERNMENT: TACOM-ARDEC, AMSTA-AR-CCL-F

c. TYPED NAME (First, Middle Initial, Last):

d. TITLE: Ronald E. Elbe, Chief, CCAC Prod & Field Spt Team

e. SIGNATURE: Joseph C. Vaj

f. DATE SIGNED (YYMMDD): 010405

15.a. ACTIVITY ACCOMPLISHING REVISION

b. REVISION COMPLETED (Signature)

c. DATE SIGNED (YYMMDD)

DD FORM 1695, APR 92 (EF-V1) (PerFORM PRO)

PREVIOUS EDITIONS ARE OBSOLETE.

DISTRIBUTION STATEMENT A : UNLIMITED

NOTICE OF REVISION (NOR)
THIS REVISION DESCRIBED BELOW HAS BEEN AUTHORIZED FOR THE DOCUMENT LISTED

1. DATE (YYMMDD): 1 12 27

Form Approved OMB No. 0704-0188

Public reporting burden for this collection of information is estimated to average 2 hours per response, including the time for reviewing instructions, searching existing data sources, gathering and maintaining the data needed, and completing and reviewing the collection of information. Send comments regarding this burden estimate or any other aspect of this collection of information, including suggestions for reducing this burden, to Department of Defense, Washington Headquarters Services, Directorate for Information Operations and Reports, 1215 Jefferson Davis Highway, Suite 1204, Arlington VA 22202-4302, and to the Office of Management and Budget, Paperwork Reduction Project (0704-0188), Washington DC 20503. PLEASE DO NOT RETURN YOUR COMPLETED FORM TO EITHER OF THESE ADDRESSES. RETURN COMPLETED FORM TO THE GOVERNMENT ISSUING CONTRACTING OFFICER FOR THE CONTRACT/PROCURING ACTIVITY NUMBER LISTED IN ITEM 2 OF THIS FORM.

2. PROCURING ACTIVITY NO.: L0S2049

3. DODAAC:

4. ORIGINATOR
a. TYPED NAME (First, Middle Initial, Last): Charles E. Pluviose

b. ADDRESS (Street, City, State, Zip Code): AMSTA-AR-CCL-A (TACOM-ARDEC) Picatinny Arsenal, NJ 07806-5000

5. CAGE CODE: 19200

6. NOR NO.: 005

7. CAGE CODE: 19200

8. DOCUMENT NO.: 5830128

9. TITLE OF DOCUMENT: ELAVATING MECHANISM ASSY

10. REVISION LETTER
a. CURRENT:
b. NEW:

11. ECP NO.: L032049

12. CONFIGURATION ITEM (OR SYSTEM) TO WHICH ECP APPLIES
MT,MG, MK64

13. DESCRIPTION OF REVISION
APPLICATION BLOCK:
ADD:

F8403398 - MT, TRIPOD, MG, CAL .50, M3

14. THIS SECTION FOR GOVERNMENT USE ONLY

a. (X one)
- [X] (1) Existing document supplemented by this NOR may be used in manufacture.
- [ ] (2) Revised document must be received before manufacturer may incorporate this change.
- [ ] (3) Custodian of master document shall make above revision and furnish revised document.

b. ACTIVITY AUTHORIZED TO APPROVE CHANGE FOR GOVERNMENT: TACOM-ARDEC, AMSTA-AR-CCL-F

c. TYPED NAME (First, Middle Initial, Last):

d. TITLE: for Ronald E. Elbe, Chief, CCAC Prod & Field Spt Team

e. SIGNATURE: Joseph C. Vizi

f. DATE SIGNED (YYMMDD): 010405

15.a. ACTIVITY ACCOMPLISHING REVISION

b. REVISION COMPLETED (Signature)

c. DATE SIGNED (YYMMDD)

DD FORM 1695, APR 92 (EF-V1) (PerFORM PRO)

PREVIOUS EDITIONS ARE OBSOLETE.

DISTRIBUTION STATEMENT A: UNLIMITED

Attachment 006

ENGINEERING CHANGE PROPOSAL

(SHORT FORM)
(See MIL-STD-481 for instructions)

DATE (YYMMDD): 001115

Form Approved
OMB No. 0704-0188

PROCESSING ACTIVITY NUMBER: LOS3047

1. ORIGINATOR NAME AND ADDRESS:
CAPCO, INC.
1328 WINTERS AVE.
GRAND JUNCTION, CO 81501

2. CONTRACT NUMBER AND LINE ITEM: DAAE20-99-D-0140/0002

3. PROCESSING CONTRACTING OFFICER: Kristan Mendoza

4. TITLE OF CHANGE: Ammo Can Holder/Bracket Mounting changes

5. SCP NUMBER	REV	AMEND	6. CAGE CODE	7. CLASS OF SCP	8. JUST. CODE	9. PRIORITY
01400002			04099	I N		K

10. SPECIFICATIONS AFFECTED

CAGE CODE	SPECIFICATION / DOCUMENT NO	REV

11. DRAWINGS AFFECTED

CAGE CODE	NUMBER	REV
	see attached	A

12. CONFIGURATION ITEM NOMENCLATURE / TYPE DESIGNATION / WEAPON SYSTEM CODE: MK93 MOD 1 Upgrade

13. IF PRODUCTION: | X | YES | | NO

14. HIGHEST ASSEMBLY AFFECTED

NOMENCLATURE	PART NO.	NEW
see attached		

15. DESCRIPTION OF CHANGE

see attached

16. NEED FOR CHANGE

see attached

-5 DEC 2000
AMSTA-AR OAD
2000 DEC -5 A 7:03

17. EFFECT ON ASSOCIATED EQUIPMENT: NONE

18. PRODUCTION EFFECTIVITY BY SERIAL NUMBER: ALL PRODUCTION

19. EFFECT ON PRODUCTION DELIVERY SCHEDULE: NONE

20. RECOMMENDED RETROFIT EFFECTIVITY: N/A

21. ESTIMATED RF DELIVERY SCHEDULE:

22. ESTIMATED COSTS / SAVINGS: N/A

23. SIGNATURE ACTIVITY AUTHORIZED SIGNATURE: [signature]

23a. TITLE: Engineer

24. APPROVAL/DISAPPROVAL A. RECOMMEND | X | APPROVAL | | DISAPPROVAL w/ MOD 1 OF 9

B. APPROVAL | X | APPROVAL w/ MOD | | DISAPPROVAL

C. GOVERNMENT ACTIVITY

SIGNATURE: [signature] DATE YYMMDD: 20010108

D. APPROVAL | | APPROVAL

E. GOVERNMENT ACTIVITY

SIGNATURE: Ronald E. Elbe
Chief, CCAC Prod & Field Spt Team

DATE YYMMDD:

TACOM-ARDEC, AMSTA-AR-CCL-F

DIST. STATEMENT A

L053047

ECP Continuation Sheet

	NOR #	DOCUMENT #	BLOCK 14 NOMENCLATURE / PART#	BLOCK 15	BLOCK 16
	001	6650435	AMMO CAN HOLDER ASSEMBLY / 6650724	A	I
001	002	6650435	AMMO CAN HOLDER, .50 CAL / 6650435	B	II
001	003	6650435	AMMO CAN HOLDER, .50 CAL / 6650435	C	III
002	004	12929251	BRACKET, MOUNTING ASSY FOR PA 120 AND M548 AMMO CAN / 12929150	D	IV
003	005	12929150	BRACKET, WELDMENT / 12929150	E	V
004	006	6650724	LATCH / BRACKET / 12972502	F	VI
005	007	6659717	AMMO CAN HOLDER, ASSEMBLY / 6650724	G	VII

A	INCORPORATE ADDITIONAL WELDING SPEC'S
B	SPECIFY MATERIAL
C	SPECIFY MATERIAL
D	ALLOW FOR ALTERNATE DESIGN
E	SPECIFY MATERIAL
F	CLARIFY PROTECTIVE FINISH REQUIREMENT
G	CLARIFY PROTECTIVE FINISH REQUIREMENT

I	PERMIT ONE WELD CERTIFICATION TO GOVERN PRODUCTION OF SIMILAR PRODUCTS
II	MATERIAL SPECIFIED IS NOT MADE IN ROUND STOCK
III	MATERIAL SPECIFIED IS NOT MADE IN ROUND STOCK
IV	IMPROVE MANUFACTURABILITY
V	INCREASE MATERIAL AVAILABILITY
VI	IMPROVE MANUFACTURABILITY AND CLARIFY PROPER FINISH
VII	IMPROVE MANUFACTURABILITY AND CLARIFY PROPER FINISH

NOTICE OF REVISION (NOR)

THIS REVISION DESCRIBED BELOW HAS BEEN AUTHORIZED FOR THE DOCUMENT LISTED.

1. DATE (YYMMDD)

FORM APPROVED
OMB NO. 0704-0188

[illegible]

PLEASE DO NOT RETURN YOUR COMPLETED FORM TO EITHER OF THESE ADDRESSES. RETURN COMPLETED FORM TO THE GOVERNMENT ISSUING CONTRACTING OFFICER FOR THE CONTRACT/PROCURING ACTIVITY

2. PROCURING ACTIVITY NO.
L0S3047

3. DODAAC

4. ORIGINATOR

5. ADDRESS (Street, City, State, Zip Code)
CAPCO, INC.
1320 WINTERS AVE.
GRAND JUNCTION, CO 18501

6. CAGE CODE
04[illegible]

7. CAGE CODE

8. NOR NO.
-003

9. TYPED NAME
Ed Repshire

10. DOCUMENT NO.
12929159

11. SEP NO.

12. TITLE OF DOCUMENT
BRACKET, Sheet 2

13. REVISION LETTER
a. CURRENT
C
b. NEW

14. CONFIGURATION ITEM (NR SYSTEM) TO WHICH SEP APPLIES

15. DESCRIPTION OF REVISION

ADD TEXT: ZONE D-1:
"WASHER ALTERNATE MATERIAL: STEEL 1008 THRU 1020 PER ASTM A29"

3

16. THIS SECTION FOR GOVERNMENT USE ONLY

a. (X ONE)
(1) Existing document supplemented by this NOR may be used in manufacture.
(2) Revised document must be received before manufacturer may incorporate this change.
(3) Cancellation of master document shall make above revision and furnish revised document.

b. ACTIVITY AUTHORIZED TO APPROVE CHANGE FOR GOVERNMENT
TACOM-ARDEC, AMSTA-AR-CCL-F

c. TYPED NAME (First, Middle Initial, Last)

d. TYPED NAME
Ronald E. Elbs
Chief, CCAC Prod & Field Spt Team

e. SIGNATURE
[signature]

f. DATE SIGNED (YYMMDD)
20010108

15a. ACTIVITY ACCOMPLISHING REVISION

b. REVISION COMPLETED (Signature)

c. DATE SIGNED (YYMMDD)

DIST. STATEMENT A

NOTICE OF REVISION (NOR)

[illegible]

1. DATE (YYMMDD)		FORM APPROVED OMB NO. [illegible]	
[illegible]		2. PROCURING ACTIVITY NO. L053047	
		3. DODAAC	
4. ORIGINATOR	5. ADDRESS (Street, City, State, Zip Code) CAPCO, INC. 1328 WINTERS AVE. GRAND JUNCTION, CO 18501	6. CAGE CODE 04099	7. NOR NO. -002
8. TYPED NAME Ed Repshire		9. CAGE CODE	10. DOCUMENT NO. 12929251
11. TITLE OF DOCUMENT Pin, Retainer	12. REVISION LETTER a. CURRENT C	b. NEW	11. SCP NO.

13. CONFIGURATION ITEM (CR SYSTEM) TO WHICH SCP APPLIES

13. DESCRIPTION OF REVISION

ADD NOTE: ZONE C8
"12. WELD PER MIL-STD-1261 OR MIL-STD-2219

ADD NOTE: ZONE B8
"13. RANDOM RADIAL POSITION PERMITTED.

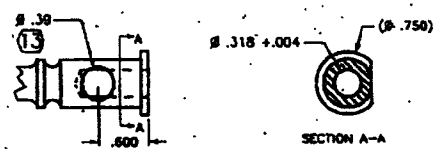

NOTE: .312 SHAFT REMOVED FOR CLARITY

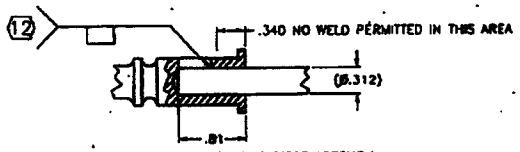

ALTERNATE DESIGN: TWO PIECE ASSEMBLY

4

14. THIS SECTION FOR GOVERNMENT USE ONLY

a. (X ONE)		(1) Existing document supplemented by the NOR may be used in manufacture.
		(2) Revised document must be received before manufacture may incorporate this change.
		(3) Revision of master document shall make above revision and furnish revised document.

b. ACTIVITY AUTHORIZED TO APPROVE CHANGE FOR GOVERNMENT TACOM-ARDEC, AMSTA-AR-CCL-F		c. TYPED NAME (First, Middle Initial, Last)
d. TITLE Ronald E. Elbe Chief, CCAC Prod & Field Spt Team	e. SIGNATURE [signature]	f. DATE SIGNED (YYMMDD) 20010108
15. ASSIGNED ACCEPTANCE/DISTRIBUTION	h. REVISION COMPLETED (Signature)	g. DATE SIGNED (YYMMDD)

DIST. STATEMENT A

NOTICE OF REVISION (NOR)

THIS REVISION DESCRIBED BELOW HAS BEEN AUTHORIZED FOR THE DOCUMENT LISTED.

1. DATE (YYMMDD)

FORM APPROVED
OMB NO. 0704-0188

[illegible]
PLEASE DO NOT RETURN YOUR COMPLETED FORM TO ERROR OF THESE ADDRESSES. RETURN COMPLETED FORM TO THE GOVERNMENT ISSUING CONTRACTING OFFICER FOR THE CONTRACT/PROCURING ACTIVITY

2. PROCURING ACTIVITY NO.

3. DODAAC

4. ORIGINATOR	5. ADDRESS (Street, City, State, Zip Code)	6. CAGE CODE	8. NOR NO.
	CAPCO, INC. 1320 WINTERS AVE. GRAND JUNCTION, CO 15001	04089	-004
9. TYPED NAME: Ed Repshire		7. CAGE CODE	9. DOCUMENT NO.: 12972502

9. TITLE OF DOCUMENT	10. REVISION LETTER		11. ECP NO.
	a. CURRENT	b. NEW	
12972502, LATCH / BRACKET	—		

12. CONFIGURATION ITEM (OR SYSTEM) TO WHICH ECP APPLIES

13. DESCRIPTION OF REVISION

CHANGE NOTE 3 TO READ FOLLOWING; ZONE D4
"PROTECTIVE FINISH: APPLY BLACK OXIDE FINISH 3.3.4 OF MIL-STD-171"

5

14. THIS SECTION FOR GOVERNMENT USE ONLY

a. (X ONE)
(1) Existing document supplemented by this NOR may be used in manufacture.
(2) Revised document must be received before manufacturer may incorporate this change.
(3) Cancellation of master document shall make above revision and furnish revised document.

b. ACTIVITY AUTHORIZED TO APPROVE CHANGE FOR GOVERNMENT	c. TYPED NAME (First, Middle Initial, Last)	
TACOM-ARDEC, AMSTA-AR-CCL-F		
d. TITLE: Ronald E. Elbe, Chief, CCAC Prod & Field Spt Team	e. SIGNATURE: Ronald E Elbe	f. DATE SIGNED (YYMMDD): 20010108
15.a. ACTIVITY ACCOMPLISHING REVISION	b. REVISION COMPLETED (Signature)	c. DATE SIGNED (YYMMDD)

DIST. STATEMENT A

NOTICE OF REVISION (NOR)

THIS REVISION DESCRIBED BELOW HAS BEEN AUTHORIZED FOR THE DOCUMENT LISTED

1. DATE (YYYYMMDD): 20010103

Form Approved OMB No. 0704-0188

Public reporting burden for this collection of information is estimated to average 2 hours per response, including the time for reviewing instructions, searching existing data sources, gathering and maintaining the data needed, and completing and reviewing the collection of information. Send comments regarding this burden estimate or any other aspect of this collection of information, including suggestions for reducing this burden to Department of Defense, Washington Headquarters Services, Directorate of Information Operations and Reports, 1215 Jefferson Davis Highway, Suite 1204, Arlington, VA 22202-4302, and to the Office of Management and Budget, Paperwork Reduction Project (0704-0188), Washington, DC 20503.

PLEASE DO NOT RETURN YOUR COMPLETED FORM TO EITHER OF THESE ADDRESSES. RETURN COMPLETED FORM TO THE GOVERNMENT ISSUING CONTRACTING OFFICER FOR THE CONTRACT / PROCURING ACTIVITY NUMBER LISTED IN ITEM 2 OF THIS FORM.

2. PROCURING ACTIVITY NO.: LBS3047

3. DODAAC:

4. ORIGINATOR

a. TYPED NAME (First, Middle Initial, Last): PHILIP L. VERNON

b. ADDRESS (Street, City, State, Zip Code): ARDEC, AMSTA-AR-CCL-PS, ROCK ISLAND, IL 61299

5. CAGE CODE: 19200

6. NOR NO.: -001

7. CAGE CODE: 19200

8. DOCUMENT NO.: F9890435

9. TITLE OF DOCUMENT: AMMO CAN HOLDER, .50 CAL

10. REVISION LETTER: a. CURRENT: D; b. NEW:

11. ECP NO.: 0140E002

12. CONFIGURATION ITEM (OR SYSTEM) TO WHICH ECP APPLIES: MK93 MOD I MOUNT

13. DESCRIPTION OF REVISION

CHANGE: SHEET 1: IN NOTE 2:

FROM: "WELD PER AWS-D1.1 STRUCTURAL WELDING CODE AND/OR AWS-D9.1 SHEET METAL WELDING CODE.
TO: "WELD PER MIL-STD-1261 OR SAE-AMS-STD-2219 OR AWS-D1.1 STRUCTURAL WELDING CODE AND/OR AWS-D8.1 SHEET METAL WELDING CODE.

ADD: SHEET 1: ZONE B-1:
FIND NO. 6, COLUMN 6: "MATERIAL: STEEL 1018 PER ASTM A29"

ADD: SHEET 1 ZONE B-1:
FIND NO. 7: COLUMN 6: "MATERIAL: STEEL 1008 THRU 1020 PER ASTM A29"

6

14. THIS SECTION FOR GOVERNMENT USE ONLY

a. (X one)
- [X] (1.) Existing document supplemented by this NOR may be used in manufacture.
- [ ] (2.) Revised document must be received before manufacture may incorporate this change.
- [ ] (3.) Custodian of master document shall make above revision and furnish revised document.

b. ACTIVITY AUTHORIZED TO APPROVE CHANGE FOR GOVERNMENT: TACOM-ARDEC, AMSTA-AR-CCL-F

c. TYPED NAME (First, Middle Initial, Last):

d. TITLE: Configuration Manager, Ch, Cmbt Spt & Sm Cal Wpn Sys Div

e. SIGNATURE:

f. DATE SIGNED: 20010108

15a. ACTIVITY ACCOMPLISHING REVISION:

b. REVISION COMPLETED (Signature):

c. DATE SIGNED:

DD Form 1695, APR 92

Previous editions are obsolete.

DISTRIBUTION STATEMENT A: APPROVED FOR PUBLIC DISTRIBUTION, DISTRIBUTION IS UNLIMITED

NOTICE OF REVISION (NOR)

THIS REVISION DESCRIBED BELOW HAS BEEN ARRANGED FOR THE DOCUMENT LISTED.

[illegible]

PLEASE DO NOT RETURN YOUR COMPLETED FORM TO BENCH OF THESE ADDRESSES. RETURN COMPLETED FORM TO THE GOVERNMENT ISSUING CONTRACTING OFFICER FOR THE CONTRACT/PROCURING ACTIVITY

1. DATE (YYMMDD)			FORM APPROVED OMB NO. 0700-0136
			2. PROCURING ACTIVITY NO. L0S3047
			3. DODAAC
4. ORIGINATOR	5. ADDRESS (Street, City, State, Zip Code) CAPCO, INC. 1328 WINTERS AVE. GRAND JUNCTION, CO 18501	6. CAGE CODE D4088	8. NOR NO. -005
9. TYPED NAME Ed Repshire		7. CAGE CODE 53711	9. DOCUMENT NO. 6650724
9. TITLE OF DOCUMENT AMMO CAN HOLDER, ASSEMBL	10. REVISION LETTER a. CURRENT A	b. NEW	11. SCP NO.

12. CONFIGURATION ITEM (OR SYSTEM) TO WHICH SCP APPLIES

13. DESCRIPTION OF REVISION

CHANGE:
NOTE 1:

FROM:"1. PROTECTIVE FINISH: APPLY BLACK OXIDE FINISH 3.3.4 OF MIL-STD-171 TO FN'S 2 AND 4 BEFORE ASSEMBLY, THEN APPLY FINISH 20.24 AFTER ASSEMBLY."

TO:"1. PROTECTIVE FINISH: APPLY BLACK OXIDE FINISH 3.3.4 OF MIL-STD-171 TO FN 4 BEFORE ASSEMBLY."

7

14. THIS SECTION FOR GOVERNMENT USE ONLY

a. (X ONE)
- (1) Existing document supplemented by this NOR may be used in manufacture.
- (2) Revised document must be received before manufacturer may incorporate this change.
- (3) Custodian of master document shall make above revision and furnish revised document.

b. ACTIVITY AUTHORIZED TO APPROVE CHANGE FOR GOVERNMENT TACOM-ARDEC, AMSTA-AR-CCL-F		c. TYPED NAME (First, Middle Initial, Last)
d. Ronald E. Elbe Chief, CCAC Prod & Field Spt Team	e. SIGNATURE Ronald E Elbe	f. DATE SIGNED (YYMMDD) 20010108
14a. ACTIVITY ACCOMPLISHING REVISION	h. REVISION COMPLETED (Signature)	g. DATE SIGNED (YYMMDD)

DIST. STATEMENT A

CONFIGURATION CONTROL BOARD DIRECTIVE

1. PAN L0S3047

2. CONFIGURATION ITEM / PART NUMBER: MK93 MOD I MOUNT / 6650435

3. CCB NAME / LEVEL / DATE: SMALL ARMS WEAPONS / II / 3 JAN 01

4. TYPE OF ACTION: [X] ECP [ ] VECP [ ] RFW [ ] VEP [ ] RFD [ ] OTHER:

5. ACTION ORIGINATOR NAME: CAPCO, INC.

6. ACTION ORIGINATOR NUMBER AND DATE: 0146E002 15 NOV 00

7. COORDINATION WITH COMBAT DEVELOPER
Determine by completing a Combat Developer Coordination Checksheet for all Class I ECPs for type classified items.

INFORMAL SCHOOL CODES FOR INSTRUCTION: [X] NO [ ] 01 [ ] 02 [ ] 03 [ ] 04 [ ] 05 [ ] 06 [ ] 07 [ ] 08 [ ] 09 [ ] OTHER _____

FORMAL: [ ] YES [ ] NA

8. SYNOPSIS OF CHANGE: MISC. CLARIFICATIONS CHANGES AND UPDATES

9. MODIFICATION TO SUBMITTED ACTION: [ ] NONE [ ] REVISION [X] CORRECTION [ ] SEE PAGE ___

10. POSITION ON RECOMMENDATION TO CONFIGURATION MANAGER

OFFICE SYMBOL	SIGNATURE	CONCUR YES	CONCUR NO	OFFICE SYMBOL	SIGNATURE	CONCUR YES	CONCUR NO
AMSTA-LC-CSIH	[signature]	X					
AMSTA-AR-QAWE	[signature]	X					
AMSTA-LC-CSC-A	S. [signature] EMAIL	X					
MCLNO-LMC	GYSGT. NEUHALFEN FONCON	X					
AFLNO	W. [signature] CMS	X					
NVLNO	[signature]	X					
AMSTA-AR-CCL-FS	[signature]						
AMSTA-AR-CCL-A	R. SMITH FONCON	X					

11. REMARKS

SEE PAGE 2

8

12a. ECP CLASSIFICATION: [X] I [ ] II

12b. RFW / RFD DESIGNATION: [ ] CRITICAL [ ] MINOR [ ] MAJOR

12c. RECURRING RFD / RFW? [ ] NO [ ] YES - ECP REQUIRED [ ] YES [ ] NO

12d. ECP RESULTS FROM RFW / RFD: [ ] YES [X] NO

12e. COST IMPACT: [X] NONE [ ] INCREASE $ _____ [ ] DECREASE $ _____

13a. CHAIRMAN RECOMMENDATION: [ ] APPROVE [X] APPROVE AS MODIFIED [ ] DISAPPROVE [ ] OTHER

13b. CCB CHAIRMAN: [signature] LE
Loren Brunton, AMSTA-AR-CCL-FS
PRINTED / TYPED NAME, OFFICE SYMBOL AND SIGNATURE

13c. DATE: 8 Jan 2001

13d. TELEPHONE: x26160

14a. DECISION ON ACTION: [ ] APPROVE [X] APPROVE AS MODIFIED [ ] DISAPPROVE [ ] OTHER

14b. CONFIGURATION MANAGER: [signature]
Chief, CCAC, Production & Field Support Team
PRINTED / TYPED NAME, OFFICE SYMBOL AND SIGNATURE

14c. DATE: 1/8/01

14d. TELEPHONE: x25475

AMCCOM Form 390-R-E, 1 Feb 92

Replaces AMCCOM Form 390-R-R, 1 Jun 91 and SMCAR-BA Forms 1517 and 1518, which may not be used.

CONFIGURATION CONTROL BOARD DIRECTIVE	1. PAN L0S3047

11. REMARKS, CONTINUED:

a. CCB BOARD RECOMMENDATION W/RATIONALE: RECOMMEND APPROVAL AS MODIFIED. THIS CHANGE ADDS MISSING MATERIAL SPECIFICATIONS, CLARIFIES WELDING REQUIREMENTS AND PROTECTIVE FINISH REQUIREMENTS AND ADDS ALTERNATIVE WELDED CONFIGURATION TO PN 12329251.

b. MODIFICATIONS/CORRECTIONS: CLASS OF ECP WAS CHANGED TO "I". NORs FOR DASH NUMBERS WERE CONSOLIDATED ON A SINGLE NOR, PROPOSED SPECIFICATIONS WERE UPDATED TO REFLECT THE LATEST COMMERCIAL DESIGNATIONS, PROPOSED MATERIAL ADDITION TO DRAWING 12329159 WAS CHANGED TO ALTERNATE. THESE MODIFICATIONS ARE ALL INCORPORATED IN THE ENCLOSED NORs.

c. QAP CHANGES NEEDED/INCLUDED: N/A

d. TM AFFECTED: N/A

e. OTHER SYSTEMS AFFECTED: N/A

f. CONTRACTS AFFECTED: DAAE20-99-D-0140

g. IMPLEMENTATION INSTRUCTIONS: AMSTA-LC-CSC-A WILL INCORPORATE THIS CHANGE IN THE ABOVE CONTRACT AT NO COST TO THE GOVERNMENT. THIS CHANGE MAY BE ALTERNATELY INCORPORATED IN OTHER PRODUCERS CONTRACTS ON A NO COST BASIS.

FOR ECPS:
- ☐ OPTIONAL
- ☒ MANDATORY
  - ☒ WITHOUT/ ☐ WITH OBSOLESCENCE
  - ☒ NO COST ☐ COST NTE $_____

h. READINESS IMPACT: N/A

i. EOD IMPACT: N/A

j. VE SAVINGS:

k. RATIONALE/CALCULATIONS FOR COST CONCESSION (RFW) OR CONTRACTUAL COST ADJUSTMENT (RFD, ECP, VECP):

TOTAL $ N/A – %

l. OZONE DEPLETING SUBSTANCE ELIMINATED: YES ☐ NO ☒

9

SH2

NOTICE OF REVISION (NOR)

THIS REVISION DESCRIBED BELOW HAS BEEN AUTHORIZED FOR THE DOCUMENT LISTED.

1. DATE (YYMMDD)

FORM APPROVED
OMB NO. 0704-0190

[illegible]

PLEASE DO NOT RETURN YOUR COMPLETED FORM TO EITHER OF THESE ADDRESSES. RETURN COMPLETED FORM TO THE GOVERNMENT MAILING CONTRACTING OFFICER FOR THE CONTRACT PROCURING ACTIVITY

2. PROCURING ACTIVITY NO.
L053047

3. DODAAC

4. ORIGINATOR	5. ADDRESS (Street, City, State, Zip Code) CAPCO, INC. 1320 WINTERS AVE. GRAND JUNCTION, CO 18501	6. CAGE CODE 04099	8. NOR NO. -004
9. TYPED NAME Ed Repshire		7. CAGE CODE 19200	9. DOCUMENT NO. C12972502
9. TITLE OF DOCUMENT 12972502, LATCH / BRACKET	10. REVISION LETTER a. CURRENT –	b. NEW A	11. ECP NO.

12. COMPENSATION ITEM (OR JYSTEM) TO WHICH ECP APPLIES

13. DESCRIPTION OF REVISION

CHANGE NOTE 3 TO READ FOLLOWING; ZONE D4
"PROTECTIVE FINISH: APPLY BLACK OXIDE FINISH 3.3.4 OF
MIL-STD-171"

14. THIS SECTION FOR GOVERNMENT USE ONLY

a. (X ONE)
(1) Existing document supplemented by this NOR may be used in manufacture.
(2) Revised document must be received before manufacturer may incorporate this change.
(3) Custodian of master document shall make above revision and furnish revised document.

b. ACTIVITY AUTHORIZED TO APPROVE CHANGE FOR GOVERNMENT
TACOM-ARDEC, AMSTA-AR-CCL-F

c. TYPED NAME (First, Middle Initial, Last)

d. TITLE Ronald E. Elbe Chief, CCAC Prod & Field Spt Team	e. SIGNATURE Ronald E Elbe	f. DATE SIGNED (YYMMDD) 20010108
15.a. ACTIVITY ASSEMBLING REVISION ASTM-AR-CCL-A	b. REVISION COMPLETED (Signature) R.E. Smith	c. DATE SIGNED (YYMMDD) 010131

DIST. STATEMENT A

SH3

NOTICE OF REVISION (NOR)

THIS REVISION DESCRIBED BELOW HAS BEEN ASSIGNED FOR THE DOCUMENT LISTED.

[redacted]

1. PROCURING ACTIVITY NO.	L053047
2. ORIGINATOR	
3. ADDRESS (Street, City, State, Zip Code)	CAPCO, INC. 1329 WINTERS AVE. GRAND JUNCTION, CO 18501
4. CAGE CODE	04688
5. REV NO.	-002
6. TYPED NAME	Ed Repshire
7. CAGE CODE	19200 D
8. DOCUMENT NO.	12929251
9. TITLE OF DOCUMENT	Pin, Retainer
10A. REVISION LETTER: a. SUPERSEDES	C
b. NEW	D
11. DEP NO.	
12. CONFIGURATION ITEM (OR SYSTEM) TO WHICH DEP APPLIES	

13. DESCRIPTION OF REVISION

ADD NOTE: ZONE C8
"(12) WELD PER MIL-STD-1261 OR MIL-STD-2219

ADD NOTE: ZONE B8
"(13) RANDOM RADIAL POSITION PERMITTED.

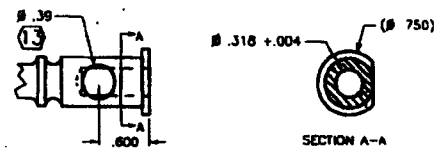

NOTE: .312 SHAFT REMOVED FOR CLARITY

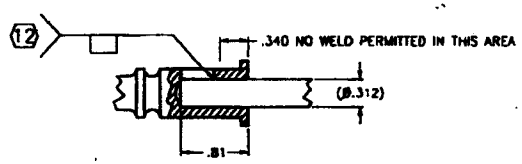

ALTERNATE DESIGN: TWO PIECE ASSEMBLY

14. THIS SECTION FOR GOVERNMENT USE ONLY

a. (X one)	(1) Existing document supplemented by this NOR may be used in manufacture.
	(2) Revised document incorporating the results of future manufacturing may incorporate this change.
	(3) Destruction of master document shall make change revision and furnish revised document.

b. ACTIVITY AUTHORIZED TO APPROVE CHANGE REVISION DEPARTMENT	TACOM-ARDEC, AMSTA-AR-CCL-F
c. TYPED NAME (First, Middle Initial, Last)	
d. TITLE	Runaki E. Elhe Chief, LX/AC Prod & Flight Qlt Team
e. SIGNATURE	
f. DATE SIGNED (YYMMDD)	20010108
g. ACTIVITY ADDRESS (Include Zip Code)	AMSTA-AR-CCL-A
h. REVISION COMPLETED (Signature)	
i. DATE SIGNED (YYMMDD)	010131

DIST. STATEMENT A

SH4

NOTICE OF REVISION (NOR)

THIS REVISION DESCRIBED BELOW HAS BEEN AUTHORIZED FOR THE DOCUMENT LISTED

1. DATE (YYYYMMDD): 20010103

Form Approved OMB No. 0704-0188

Public reporting burden for this collection of information is estimated to average 2 hours per response, including the time for reviewing instructions, searching existing data sources, gathering and maintaining the data needed, and completing and reviewing the collection of information. Send comments regarding this burden estimate or any other aspect of this collection of information, including suggestions for reducing this burden to Department of Defense, Washington Headquarters Services, Directorate of Information Operations and Reports, 1215 Jefferson Davis Highway, Suite 1204, Arlington, VA 22202-4302, and to the Office of Management and Budget, Paperwork Reduction Project (0704-0188), Washington, DC 20503.

PLEASE DO NOT RETURN YOUR COMPLETED FORM TO EITHER OF THESE ADDRESSES. RETURN COMPLETED FORM TO THE GOVERNMENT ISSUING CONTRACTING OFFICER FOR THE CONTRACT / PROCURING ACTIVITY NUMBER LISTED IN ITEM 2 OF THIS FORM.

2. PROCURING ACTIVITY NO.: L0S3047

3. DODAAC:

4. ORIGINATOR
a. TYPED NAME (First, Middle Initial, Last): PHILIP L. VERNON
b. ADDRESS (Street, City, State, Zip Code): ARDEC, AMSTA-AR-CCL-FS, ROCK ISLAND, IL 61299

5. CAGE CODE: 19200

6. NOR NO.: -001

7. CAGE CODE: 53711

8. DOCUMENT NO.: F8650435 SH1

9. TITLE OF DOCUMENT: AMMO CAN HOLDER, .50 CAL

10. REVISION LETTER
a. CURRENT: D
b. NEW: E

11. ECP NO.: 0140E002

12. CONFIGURATION ITEM (OR SYSTEM) TO WHICH ECP APPLIES: MK93 MOD I MOUNT

13. DESCRIPTION OF REVISION

CHANGE: SHEET 1: IN NOTE 2:

FROM: "WELD PER AWS-D1.1 STRUCTURAL WELDING CODE AND/OR AWS-D9.1 SHEET METAL WELDING CODE.
TO: "WELD PER MIL-STD-1261 OR SAE-AMS-STD-2219 OR AWS-D1.1 STRUCTURAL WELDING CODE AND/OR AWS-D9.1 SHEET METAL WELDING CODE.

ADD: SHEET 1: ZONE B-1:
FIND NO. 6, COLUMN 6: "MATERIAL: STEEL 1018 PER ASTM A29"

ADD: SHEET 1 ZONE B-1:
FIND NO. 7: COLUMN 6: "MATERIAL: STEEL 1008 THRU 1020 PER ASTM A29"

UPDATE "REV STATUS OF SHEETS" BLOCK:
SHEET 1: FROM "D" TO "E"

ADMINISTRATIVE/EDITORIAL ADDITIONS ARE APPROVED:
Signature SMCAR-BAT-Q Date 010131

14. THIS SECTION FOR GOVERNMENT USE ONLY

a. (X one)
[X] (1.) Existing document supplemented by this NOR may be used in manufacture.
[ ] (2.) Revised document must be received before manufacture may incorporate this change.
[ ] (3.) Custodian of master document shall make above revision and furnish revised document.

b. ACTIVITY AUTHORIZED TO APPROVE CHANGE FOR GOVERNMENT: TACOM-ARDEC, AMSTA-AR-CCL-F
c. TYPED NAME (First, Middle Initial, Last):

d. TITLE: Configuration Manager, Ch, Cmbt Spt & Sm Cal Wpn Sys Div
e. SIGNATURE:
f. DATE SIGNED: 20010108

15a. ACTIVITY ACCOMPLISHING REVISION: AMSTA-AR-CCL-A
b. REVISION COMPLETED (Signature): R E Smith
c. DATE SIGNED: 010131

DD Form 1695, APR 92 — Previous editions are obsolete.

DISTRIBUTION STATEMENT A: APPROVED FOR PUBLIC DISTRIBUTION, DISTRIBUTION IS UNLIMITED

SH5

NOTICE OF REVISION (NOR)

THIS REVISION REQUIRED SIGNATURES HERE ANTICIPATED FOR THE DOCUMENT LISTED

3. DATE (YYMMDD)

FORM APPROVED OMB NO. 0704-0188

[redacted]

PLEASE SIGN AND RETURN YOUR COMPLETED REVISION OFFER OF USED ASSEMBLIES, BEFORE COMPLETED FORM TO THE GOVERNMENT CONTRACTING OFFICER FOR THE CONTRACTING PROCURING ACTIVITY

2. PROCURING ACTIVITY NO. L063047

3. DODAAC

4. CONTRACTOR

5. ADDRESS (Street, City, State, Zip Code)
CAPCO, INC.
1330 WINTERS AVE.
GRAND JUNCTION, CO 18901

6. CAGE CODE 04080

7. CAGE CODE 53711 F

8. NOR NO. -005

9. DOCUMENT NO. 6650721

9. TYPED NAME Ed Repshire

10. TITLE OF DOCUMENT AMMO CAN HOLDER, ASSEMBL

11. REVISION/LETTER
a. CURRENT A
b. NEW B

12. MIP NO.

13. COMPLETED NOR (FOR DOCUMENTS TO WHICH MIP APPLIES)

14. DESCRIPTION OF REVISION

CHANGE:
NOTE 1:

FROM:"1. PROTECTIVE FINISH: APPLY BLACK OXIDE FINISH 3.3.4 OF MIL-STD-171 TO FN'S 2 AND 4 BEFORE ASSEMBLY, THEN APPLY FINISH 20.24 AFTER ASSEMBLY."

TO:"1. PROTECTIVE FINISH: APPLY BLACK OXIDE FINISH 3.3.4 OF MIL-STD-171 TO FN 4 BEFORE ASSEMBLY."

15. THIS SECTION FOR GOVERNMENT USE ONLY

a. (X ONE)
(1) Existing documents supplemented by this NOR may be used in manufacture.
(2) Revised documents must be received before manufacture may incorporate this change.
(3) Completion of master document shall make above revision and handle related documents.

b. ACTIVITY AUTHORIZED TO APPROVE CHANGE FOR GOVERNMENT
TACOM-ARDEC, AMSTA-AR-CCL-F

c. TYPED NAME (First, Middle Initial, Last)
Ronald E. Elde
Chief, CCAC Prod & Field Spt Team

d. SIGNATURE

e. DATE SIGNED (YYMMDD) 20010108

f. ACTIVITY ASSIGNED REVISION
AMSTA-AR-CCL-A

g. REVISION COMPLETED (Signature)

h. DATE SIGNED (YYMMDD) 010131

DIST. STATEMENT A

SH6

NOTICE OF REVISION (NOR)

THE REVISION INDICATED BELOW HAS BEEN AUTHORIZED FOR THE DOCUMENT LISTED.

[redacted]

[redacted]

PLEASE SIGN, PROVIDE THE DATE AND RETURN TO ISSUER OF THIS NOTICE. RETURN COMPLETED FORM TO THE GOVERNMENT ENGINEER OVERSEEING THE DESIGNATED PROCURING ACTIVITY

2. PROCURING ACTIVITY NO.: L0S3047

3. SIGNAL:

4. ORIGINATOR:

5. ADDRESS (Street, City, State, Zip Code): CAPCO, INC. 1388 WINTERS AVE. GRAND JUNCTION, CO 10501

6. CAGE CODE: 04888

7. NOR NO.: -003

8. TYPED NAME: Ed Repshire

9. CAGE CODE: 19200 F

10. DOCUMENT NO.: 12929159 SH 1,2

11. TITLE OF DOCUMENT: BRACKET, Sheet 2

12. REVISION LETTER: a. CURRENT: SEE BLK 13 b. NEW: SEE BLK 13

13. DEP NO.:

14. CONTRACTOR (Name and Address) PROVIDING THE DESIGN OF REVISION:

15. DESCRIPTION OF REVISION:

SH 2:

ADD TEXT: ZONE D-1:
"WASHER ALTERNATE MATERIAL: STEEL 1008 THRU 1020 PER ASTM A29"

SH 1:

UPDATE "REVISION STATUS OF SHEETS" BLOCK:
SHEET 1: FROM "H" TO "J"
SHEET 2: FROM "C" TO "J"

ADMINISTRATIVE/EDITORIAL ADDITIONS ARE APPROVED:
SMCAR-BAT-Q 010131
Signature Date

16. THIS SECTION FOR GOVERNMENT USE ONLY

a. (Check one)
(1) Existing documents affected by this NOR may be used in current form.
(2) Revised documents must be submitted to the design activity for approval.
(3) Submission of revised documents shall make above revisions and furnish revised documents.

b. ACTIVITY ASSIGNED TO ATTEND CHANGES FOR GOVERNMENT: TACOM-ARDEC, AMSTA-AR-CCL-F

c. TYPED NAME (First, Middle Initial, Last): Michael E. Ellis
Chief, CCAC Prod & Field Spt Team

d. SIGNATURE:

e. DATE SIGNED (YYMMDD): 20010108

f. ACTIVITY ASSIGNED FOR PROCESSING: AMSTA-AR-CCL-A

g. REVISION COMPLETED (Signature): R.G. Smith

h. DATE SIGNED (YYMMDD): 010131

DIST. STATEMENT A

AMSTA-AR-CCL

ENGINEERING RELEASE RECORD (ERR)

Form Approved
OMB No. 0704-0188

Public reporting burden for this collection of information is estimated to average 1 hour per response, including the time for reviewing the instructions, searching existing data sources, gathering and maintaining the data needed, and completing and reviewing the collection of information. Send comments regarding this burden estimate or any other aspect of this collection of information, including suggestions for reducing this burden, to Department of Defense, Washington Headquarters Services, Directorate for Information Operations and Reports, 1215 Jefferson Davis Highway, Suite 1204, Arlington Va 22202-4302.

1. ERR NUMBER	2. DATE (yymmdd)	3. PROCURING ACTIVITY NUMBER	4. DODAC
L0S3047	010131	L0S3047	

5. BASELINE ESTABLISHED/CHANGED	6. TYPE OF RELEASE	7. a. ECP NUMBER	b. EFFECTIVE DATE (YYMMDD)
[ ] Functional [ ] Allocated [X] Product	[ ] Initial [X] Change	0140E002	010108

8. FUNCTIONAL ASSEMBLY NOMENCLATURE

a. NOMENCLATURE	b. PART NUMBER

9. SYSTEM/CONFIGURATION ITEM
MK93 MOD 1 MOUNT

10. REMARKS/MISCELLANEOUS
THIS ERR CONTAINS ALL AFFECTED DOCUMENTS.

11. DATA RELEASED OR REVISED

Cage Code a.	DOCUMENT TYPE b.	DOCUMENT NUMBER c.	Page d.	Page e.	REVISION Letter f.	REVISION Date (yymmdd) g.	RELEASE h. IR	RELEASE h. NAR	CHANGE i. CH	CHANGE i. CAN	OTHER j.
		C12972502			A	010131			X		
		D12929251			D	010131			X		
53711		F6650435	1	2	E	010131			X		
53711		F6650724			B	010131			X		
		F12929159	1-2	2	J	010131			X		

12. SUBMITTED BY (Signature)

13. APPROVED BY (Signature)

Attachment 007

CCL-FS

ENGINEERING CHANGE PROPOSAL

(PRIORITY FORM)

(See MIL-STD-481 for Instructions)

DATE (YYMMDD): 001005

Form Approved OMB No. 0704-0188

PROCURING ACTIVITY NUMBER: L053052

1. ORIGINATOR NAME AND ADDRESS:
CAPCO, INC.
1328 WINTERS AVE.
GRAND JUNCTION, CO 81501

2. CONTRACT NUMBER AND LINE ITEM: DAAE20-99-D-0040/0002

3. PROCURING CONTRACTING OFFICER: Kristen Mendoza

4. TITLE OF CHANGE: Azimuth Bar QAP Change

5. ECP NUMBER: 0140E001 REV AMEND

6. CAGE CODE: 04099

7. CLASS OF ECP:

8. JUST. CODE:

9. PRIORITY:

10. SPECIFICATIONS AFFECTED

CAGE CODE	SPECIFICATION / DOCUMENT NO	REV

11. DRAWINGS AFFECTED

CAGE CODE	NUMBER	REV
19200	SQ6650496	A

12. CONFIGURATION ITEM NOMENCLATURE / TYPE DESIGNATION / WEAPON SYSTEM CODE: MK93 MOD 1 Upgrade

13. IN PRODUCTION: [ ] YES [X] NO

14. LOWEST ASSEMBLY AFFECTED

NOMENCLATURE: Adjustable Arm Assembly

PART NO.: 6650488

NSN:

15. DESCRIPTION OF CHANGE

Delete Characteristic 106 in its entirety.

16. NEED FOR CHANGE

The black oxide coating is per MIL-STD-171 and MIL-C-13924. Paragraph 4.9 and 4.4.3 of MIL-C-13924 state resistance to salt spray applies to 300 series corrosion resistant steel only. The Azimuth Bar is 17-4 stainless steel. Therefore the Salt Spray Test per Char. 106 does not apply.

AM STA-AR DAD
2000 DEC 14 A 10:09

14 DEC 2000

17. EFFECT ON ASSOCIATED EQUIPMENT: NONE

18. PRODUCTION EFFECTIVITY BY SERIAL NUMBER: N/A

19. EFFECT ON PRODUCTION DELIVERY SCHEDULE: NONE

20. RECOMMENDED RETROFIT EFFECTIVITY: N/A

21. ESTIMATED IOT DELIVERY SCHEDULE:

22. ESTIMATED COSTS / SAVINGS: N/A

23. SUBMITTING ACTIVITY AUTHORIZED SIGNATURE: [signature]

23.a. TITLE: Sales Engineer

24. APPROVAL / DISAPPROVAL: A. RECOMMEND [X] APPROVAL [ ] DISAPPROVAL w/ MOD 1 OF 4

25. APPROVAL: [X] APPROVAL w/ MOD [ ] DISAPPROVAL

26. GOVERNMENT ACTIVITY:

SIGNATURE: [signature]

DATE YYMMDD: 20010108

27. APPROVAL: [X] APPROVAL w/ MOD [ ] DISAPPROVAL

28. GOVERNMENT ACTIVITY: TACOM-ARDEC, AMSTA-AR-CCL-F

SIGNATURE: Ronald E. Elbe
Chief, CCAC Prod & Field Spt Team

DATE YYMMDD:

DIST STATEMENT A

NOTICE OF REVISION (NOR)

THIS REVISION DESCRIBED BELOW HAS BEEN AUTHORIZED FOR THE DOCUMENT LISTED

1. DATE (YYYYMMDD): 20010103

Form Approved OMB No. 0704-0188

Public reporting burden for this collection of information is estimated to average 2 hours per response, including the time for reviewing instructions, searching existing data sources, gathering and maintaining the data needed, and completing and reviewing the collection of information. Send comments regarding this burden estimate or any other aspect of this collection of information, including suggestions for reducing this burden to Department of Defense, Washington Headquarters Services, Directorate of Information Operations and Reports, 1215 Jefferson Davis Highway, Suite 1204, Arlington, VA 22202-4302, and to the Office of Management and Budget, Paperwork Reduction Project (0704-0188), Washington, DC 20503.
PLEASE DO NOT RETURN YOUR COMPLETED FORM TO EITHER OF THESE ADDRESSES. RETURN COMPLETED FORM TO THE GOVERNMENT ISSUING CONTRACTING OFFICER FOR THE CONTRACT / PROCURING ACTIVITY NUMBER LISTED IN ITEM 2 OF THIS FORM.

2. PROCURING ACTIVITY NO.: L0S3052

3. BODAAC

4. ORIGINATOR

a. TYPED NAME (First, Middle Initial, Last): PHILIP L. VERNON

b. ADDRESS (Street, City, State, Zip Code): ARDEC, AMSTA-AR-CCL-FS, ROCK ISLAND, IL 61299

5. CAGE CODE: 19200

6. NOR NO.: -001

7. CAGE CODE: 19200

8. DOCUMENT NO.: SQ6650496

9. TITLE OF DOCUMENT: QAP FOR AZIMUTH BAR

10. REVISION LETTER: a. CURRENT: A; b. NEW:

11. ECP NO.: 0140E001

12. CONFIGURATION ITEM (OR SYSTEM) TO WHICH ECP APPLIES: MK 93 MOD I MOUNT

13. DESCRIPTION OF REVISION

SHEET 3:
DELETE CHARACTERISTIC 106 IN ITS ENTIRETY.

RENUMBER CHARACTERISTIC 107 TO READ 106 FOR CONTINUITY.

2

14. THIS SECTION FOR GOVERNMENT USE ONLY

a. (X one)
- [X] (1.) Existing document supplemented by this NOR may be used in manufacture.
- [ ] (2.) Revised document must be received before manufacture may incorporate this change.
- [ ] (3.) Custodian of master document shall make above revision and furnish revised document.

b. ACTIVITY AUTHORIZED TO APPROVE CHANGE FOR GOVERNMENT: TACOM-ARDEC, AMSTA-AR-CCL-F

c. TYPED NAME (First, Middle Initial, Last):

d. TITLE: Configuration Manager, Ch, Cmbt Spt & Sm Cal Wpn Sys Div

e. SIGNATURE: Ronald E Elk

f. DATE SIGNED: 20010108

15a. ACTIVITY ACCOMPLISHING REVISION:

b. REVISION COMPLETED (Signature):

c. DATE SIGNED:

DD Form 1685, APR 92 — Previous editions are obsolete.

DISTRIBUTION STATEMENT A: APPROVED FOR PUBLIC DISTRIBUTION, DISTRIBUTION IS UNLIMITED

CONFIGURATION CONTROL BOARD DIRECTIVE

1. PAN L0S3052

2. CONFIGURATION ITEM / PART NUMBER: MK93 MOD I MOUNT / 6658488

3. CCB NAME / LEVEL / DATE: SMALL ARMS WEAPONS / II / 3 JAN 01

4. TYPE OF ACTION: [X] ECP [ ] VECP [ ] RFW [ ] VEP [ ] RFD [ ] OTHER:

5. ACTION ORIGINATOR NAME: CAPCO, INC.

6. ACTION ORIGINATOR NUMBER AND DATE: 0140E091 5 OCT 00

7. COORDINATION WITH COMBAT DEVELOPER
Determine by completing a Combat Developer Coordination Checksheet for all Class I ECPs for type classified items.

INFORMAL CONCUR, GOOD FOR NOTIFICATION: [X] NO [ ] 01 [ ] 02 [ ] 03 [ ] 04 [ ] 05 [ ] 06 [ ] 07 [ ] 08 [ ] 09 [ ] OTHER _____

FORMAL: [ ] YES [ ] NA

8. SYNOPSIS OF CHANGE: ELIMINATE ERRONEOUS QAP CHARACTERISTIC

9. MODIFICATION TO SUBMITTED ACTION: [ ] NONE [X] REVISION [ ] CORRECTION [ ] SEE PAGE ___

10. POSITION ON RECOMMENDATION TO CONFIGURATION MANAGER

OFFICE SYMBOL	SIGNATURE	CONCUR YES	CONCUR NO	OFFICE SYMBOL	SIGNATURE	CONCUR YES	CONCUR NO
AMSTA-LC-CSIH	[signature]	X					
AMSTA-AR-QAW/E	[signature]	X					
AMSTA-LC-CSC-A	S. [signature] EMAIL	X					
MCLNO-LMC	[signature] FONCON	X					
AFLNO	[signature]	X					
NVLNO	[signature]	X					
AMSTA-AR-CCL-FS	[signature]	X					
AMSTA-AR-CCL-A	R. SMITH FONCON	X					

11. REMARKS

SEE PAGE 2

3

12a. ECP CLASSIFICATION: [X] I [ ] II

12b. RFW / RFD DESIGNATION: [ ] CRITICAL [ ] MINOR [ ] MAJOR

12c. RECURRING RFD / RFW? [ ] NO [ ] YES - ECP REQUIRED [ ] YES [ ] NO

12d. ECP RESULTS FROM RFW / RFD: [ ] YES [X] NO

12e. COST IMPACT: [X] NONE [ ] INCREASE $ _____ [ ] DECREASE $ _____

13a. CHAIRMAN RECOMMENDATION: [ ] APPROVE [X] APPROVE AS MODIFIED [ ] DISAPPROVE [ ] OTHER

13b. CCB CHAIRMAN: [signature] RE
Loren Brunten, AMSTA-AR-CCL-FS
PRINTED / TYPED NAME, OFFICE SYMBOL AND SIGNATURE

13c. DATE: 8 Jan 2001

13d. TELEPHONE: x28160

14a. DECISION ON ACTION: [ ] APPROVE [X] APPROVE AS MODIFIED [ ] DISAPPROVE [ ] OTHER

14b. CONFIGURATION MANAGER: [signature]
Chief, CCAC, Production & Field Support Team
PRINTED / TYPED NAME, OFFICE SYMBOL AND SIGNATURE

14c. DATE: 1/8/01

14d. TELEPHONE: x25475

AMCCOM Form 390-R-E, 1 Feb 92

Replaces AMCCOM Form 390-R-R, 1 Jun 91 and SMCAR-BA Forms 1517 and 1518, which may not be used.

CONFIGURATION CONTROL BOARD DIRECTIVE	1. PAN L0S3052

11. REMARKS, CONTINUED:

a. CCB BOARD RECOMMENDATION W/RATIONALE: RECOMMEND APPROVAL AS MODIFIED. THIS CHANGE ELIMINATES THE REQUIREMENT TO PERFORM SALT SPRAY FROM THE QAP. PROVISIONS OF MIL-DTL-13924 (BLACK OXIDE) REQUIRES SALT SPRAY ONLY ON AISI 300 SERIES CORROSION RESISTING STEELS. SINCE THIS COMPONENT IS MADE FROM CMPSN 17-4, THIS TEST DOES NOT APPLY.

b. MODIFICATIONS/CORRECTIONS: A NOR WAS ADDED TO DEFINITIZE THIS CHANGE.

c. QAP CHANGES NEEDED/INCLUDED: N/A

d. TM AFFECTED: N/A

e. OTHER SYSTEMS AFFECTED: N/A

f. CONTRACTS AFFECTED: DAAE20-89-D-0140

g. IMPLEMENTATION INSTRUCTIONS: AMSTA-LC-CSC-A WILL INCORPORATE THIS CHANGE IN THE ABOVE CONTRACT AT NO COST TO THE GOVERNMENT. THIS CHANGE MAY BE OPTIONALLY INCORPORATED IN OTHER PRODUCERS CONTRACTS ON A NO COST BASIS.

FOR ECPS:
- ☐ OPTIONAL
- ☒ MANDATORY
  - ☒ WITHOUT/ ☐ WITH OBSOLESCENCE
  - ☒ NO COST ☐ COST NTE $_____

h. READINESS IMPACT: N/A

i. EOD IMPACT: N/A

j. VE SAVINGS:

k. RATIONALE/CALCULATIONS FOR COST CONCESSION (RFW) OR CONTRACTUAL COST ADJUSTMENT (RFD, ECP, VECP):

TOTAL $. N/A – %

l. OZONE DEPLETING SUBSTANCE ELIMINATED: YES ☐ NO ☒

4

Attachment 008

L0S3056

January 2, 2001

AMSTA-AR-CCL-FS (70-37)

MEMORANDUM FOR

AMSTA-LC-CSI-H
MCLNO-LMC

AMSTA-AR-QAWC
MVLNO

AMSTA-LC-CSC-A
AFLNO

SUBJECT: Notice of Configuration Control Board Meeting - Small Arms Weapons

1. Enclosed documentation listed below is submitted for your evaluation, determination of life cycle impact and recommendation for approval or disapproval. It will be considered at a Configuration Control Board Meeting in the AMSTA-AR-CCL (R) conference room A, Bldg 62, 2nd floor, at 1000 on 23 Jan 01.

TYPE	CONTROL	CONTRACT	PART #	END ITEM
ECP	L0S3056	DAAE20-99-D-0140	6650435	MK93 Mod I
ECP	L0S3057	DAAE20-99-D-0140	6650671	MK93 Mod I
RFD	L0S7028	DAAE20-99-D-0140	6650433	MK93 Mod I

2. Request your representative, IAW the formalized AMCCOM Roster, participate in this meeting. If your representative cannot attend this CCB, please respond by 1st End below at least two working days prior to the meeting.

3. Failure to respond or attend shall constitute a "no input / no vote" by the addressee. Concurrence in taskers and suspense dates determined at the CCB will be assumed. Any non-concurrences will be brought to the Board in writing, or to this office NLT 1 working day after the Board. Signature will be at Division Chief or designated alternate level.

4. Point of contact is Mr. Phil Vernon, AMSTA-AR-CCL-FS, extension 28164, email vernonp.

Encl

Philip L. Vernon
Small Caliber Systems Team

FOR AMSTA-AR-CCL-FS

X Concur with CCB decision. 23 Jan 01

_____ Other - See following statement(s).

L0S3056_19200_CP_-_0013_0001_U_N
April 18, 2001 10:08 AM

NOTICE OF REVISION (NOR)

THIS REVISION DESCRIBED BELOW HAS BEEN AUTHORIZED FOR THE DOCUMENT LISTED.

1. DATE (YYYYMMDD): 001129

FORM APPROVED: OMB NO. 0704-0188

[illegible]

PLEASE DO NOT RETURN YOUR COMPLETED FORM TO EITHER OF THESE ADDRESSES. RETURN COMPLETED FORM TO THE GOVERNMENT ISSUING CONTRACTING OFFICER FOR THE CONTRACT/PROCURING ACTIVITY

2. PROCURING ACTIVITY NO.

3. DODAAC

4. ORIGINATOR	b. ADDRESS (Street, City, State, Zip Code)	5. CAGE CODE	6. NOR NO.
	CAPCO, INC. 1328 WINTERS AVE. GRAND JUNCTION, CO 18501	04099	-001
c. TYPED NAME: Ed Rapshire		7. CAGE CODE: 53711	8. DOCUMENT NO.: 6850435

9. TITLE OF DOCUMENT	10. REVISION LETTER a. CURRENT	b. NEW	11. ECP NO.
Ammo Can Holder, .50 Cal.	D	E	0140E003

12. CONFIGURATION ITEM (OR SYSTEM) TO WHICH ECP APPLIES
MK93 MOD 1 MOUNT

13. DESCRIPTION OF REVISION

In parts list, change from: "9 1 - MS20257-C3-400 HINGE CRES MS20257"
to: "9 1 - ~~MS35822-10 D~~ HINGE CARBON STEEL ~~MS35822~~"
AA5590-10 D CID AA5590

14. THIS SECTION FOR GOVERNMENT USE ONLY

a. (X ONE)		
	X	(1) Existing document supplemented by this NOR may be used in manufacture.
		(2) Revised document must be received before manufacturer may incorporate this change.
		(3) Custodian of master document shall make above revision and furnish revised document.

b. ACTIVITY AUTHORIZED TO APPROVE CHANGE FOR GOVERNMENT	c. TYPED NAME (First, Middle Initial, Last)	
TACOM ARDEC, AMSTA AR-CCL-F		
a. TITLE: Ronald E. Elbe Chief, CCAC Prod & Field Spt Team	e. SIGNATURE: Lawrence Bernth	f. DATE SIGNED (YYYYMMDD): 20010126
15.a. ACTIVITY ACCOMPLISHING REVISION	b. REVISION COMPLETED (Signature)	c. DATE SIGNED (YYYYMMDD)

DD FORM 1695, APR 92

DIST STMT A: UNLIMITED

COMMENTS ON WAIVER, DEVIATION OR ENGINEERING CHANGE REQUEST

1. DATE OF REQUEST: 20 Dec 00

2. PRIME CONTRACTOR (Name, city and state): Capco, Inc. 1328 Winters Ave Grand Junction, CO 81501

3. PLANT (Name, city & state, if different than Item 2):

4. TYPE OF REQUEST: [ ] WAIVER [ ] DEVIATION [X] ECP

5. CLASS OF ECP OR TYPE OF NONCONFORMANCE: [ ] I [ ] II [X] NOT CLASSIFIED

6. REQUEST OR ECP NUMBER: 0MA0 E003

7. CONTRACT NUMBER:

ROUTINGS, ACTIONS, RECOMMENDATION, COMMENTS AND/OR REMARKS

8. QUALITY ASSURANCE REPRESENTATIVE: A. [X] APPROVED AND ACCEPTANCE OF REPORTED VIOLATIONS B. [ ] CONCUR IN CLASSIFICATION C. [ ] NONCONCUR IN CLASSIFICATION D. [X] APPROVAL RECOMMENDED E. [ ] APPROVAL NOT RECOMMENDED

TYPED NAME AND TITLE OF INITIATOR: David P. Peterson, Quality Assurance Specialist
SIGNATURE:
OFFICE SYMBOL: DCMA-CBOC
PHONE NO.: 970-245-0407
DATE SIGNED: 20 Dec 00

9. [ ] ROUTED TO GO. STAFF OR ENGINEER: A. [ ] CONCUR IN CLASSIFICATION B. [ ] NONCONCUR IN CLASSIFICATION C. [ ] APPROVAL RECOMMENDED D. [ ] APPROVAL NOT RECOMMENDED

TYPED NAME AND TITLE OF REVIEWER:
SIGNATURE:
OFFICE SYMBOL:
PHONE NO.:
DATE SIGNED:

10. [ ] ROUTED TO CAC PRODUCTION OFFICE: A. [ ] APPROVAL RECOMMENDED B. [ ] DISAPPROVAL RECOMMENDED
OFFICE SYMBOL: PHONE NO.: DATE SIGNED:
TYPED NAME AND TITLE OF REVIEWER: SIGNATURE:

11. [ ] ROUTED TO ACO: A. [ ] APPROVAL RECOMMENDED B. [ ] DISAPPROVAL RECOMMENDED
OFFICE SYMBOL: PHONE NO.: DATE SIGNED:
TYPED NAME AND TITLE OF REVIEWER: SIGNATURE:

12. [ ] ROUTED TO OTHER (Specify): A. [ ] APPROVAL RECOMMENDED B. [ ] DISAPPROVAL RECOMMENDED:
OFFICE SYMBOL: PHONE NO.: DATE SIGNED:
TYPED NAME AND TITLE OF REVIEWER: SIGNATURE:

13. [ ] ROUTED TO PCO
OFFICE SYMBOL: PHONE NO.:

14. COMMENTS AND/OR REMARKS (When recommending on Items 8 thru 12, be sure to identify it with related item. Continue on reverse side if necessary)

Block 8: I reviewed this ECP with Mr. Ed Rejshire, Capco Technical Engineer for the MK93 program.

15. CONCLUDING DECISION OR ACTION: A. [ ] APPROVED B. [ ] DISAPPROVED

16. MODIFICATION OF CONTRACT #: A. [ ] ISSUED Bilateral/Unilateral Modification B. [ ] NOT REQUIRED

17. TYPED NAME AND TITLE (Approving or disapproving authority):
SIGNATURE:
DATE:

DISTRIBUTION OF COPIES: [ ] CONTRACTOR [ ] ACO [ ] DAR [ ] OTHER (Specify)

DD FORM 1998, JUL 75 (EG) Reference DLA Form 573 which is obsolete. PerFORM (DLA)

CONFIGURATION CONTROL BOARD DIRECTIVE

1. PAN L0S3056

2. CONFIGURATION ITEM / PART NUMBER: MK93 MOD I MOUNT / 6650435

3. CCB NAME / LEVEL / DATE: SMALL ARMS WEAPONS / II / 23 JAN 01

4. TYPE OF ACTION: [X] ECP [ ] VECP [ ] RFW [ ] VEP [ ] RFD [ ] OTHER:

5. ACTION ORIGINATOR NAME: CAPCO, INC.

6. ACTION ORIGINATOR NUMBER AND DATE: 0140E003 29 NOV 00

7. COORDINATION WITH COMBAT DEVELOPER
Determine by completing a Combat Developer Coordination Checksheet for all Class I ECPs for type classified items.

INFORMAL SCHOOL CODES FOR NOTIFICATION: [X] NO [ ] 01 [ ] 02 [ ] 03 [ ] 04 [ ] 05 [ ] 06 [ ] 07 [ ] 08 [ ] 09 [ ] OTHER _____

FORMAL: [ ] YES [ ] NA

8. SYNOPSIS OF CHANGE
REPLACE STAINLESS STEEL HINGE WITH CARBON STEEL HINGE

9. MODIFICATION TO SUBMITTED ACTION: [ ] NONE [X] REVISION [ ] CORRECTION [ ] SEE PAGE ___

10. POSITION ON RECOMMENDATION TO CONFIGURATION MANAGER

OFFICE SYMBOL	SIGNATURE	CONCUR YES	CONCUR NO	OFFICE SYMBOL	SIGNATURE	CONCUR YES	CONCUR NO
AMSTA-LC-CSIH	[signature]	X					
AMSTA-AR-QAWA	J. FARMER FONCON	X					
AMSTA-LC-CSC-A	S. FITZER EMAIL	X					
MCLNO-LMC	[signature]	X					
AFLNO	W. FENDER EMAIL	X					
NVLNO	[signature]	X					
AMSTA-AR-CCL-FS	[signature]	X					
AMSTA-AR-CCL-A	D. SMITH FONCON	X					

11. REMARKS

SEE PAGE 2

12a. ECP CLASSIFICATION: [X] I [ ] II

12b. RFW / RFD DESIGNATION: [ ] CRITICAL [ ] MAJOR [ ] MINOR

12c. RECURRING RFD / RFW? [ ] NO [ ] YES - ECP REQUIRED [ ] YES [ ] NO

12d. ECP RESULTS FROM RFW / RFD: [ ] YES [X] NO

12e. COST IMPACT: [ ] NONE [X] INCREASE $ $872.00 [ ] DECREASE $ _____

13a. CHAIRMAN RECOMMENDATION: [ ] APPROVE [X] APPROVE AS MODIFIED [ ] DISAPPROVE [ ] OTHER

13b. CCB CHAIRMAN: Gerald A Strall for Loren Brunton, AMSTA-AR-CCL-FS
PRINTED / TYPED NAME, OFFICE SYMBOL AND SIGNATURE

13c. DATE: 26 Jan 2001

13d. TELEPHONE: x28160

14a. DECISION ON ACTION: [ ] APPROVE [X] APPROVE AS MODIFIED [ ] DISAPPROVE [ ] OTHER

14b. CONFIGURATION MANAGER: [signature]
Chief, CCAC, Production & Field Support Team
PRINTED / TYPED NAME, OFFICE SYMBOL AND SIGNATURE

14c. DATE: 26 Jan 2001

14d. TELEPHONE: x25475

AMCCOM Form 390-R-E, 1 Feb 92

Replaces AMCCOM Form 390-R-R, 1 Jun 91 and SMCAR-BA Forms 1517 and 1518, which may not be used.

CONFIGURATION CONTROL BOARD DIRECTIVE	1. PAN L0S3056

11. REMARKS, CONTINUED:

a. CCB BOARD RECOMMENDATION W/RATIONALE: RECOMMEND APPROVAL AS MODIFIED. THIS CHANGE PROPOSES REPLACEMENT OF THE STAINLESS STEEL HINGE WITH A CARBON STEEL HINGE. THE AMMO CAN HOLDER WAS PREVIOUSLY CHANGED FROM STAINLESS TO CARBON STEEL AND THE HINGE WAS INADVERTENTLY OMITTED FROM THE PRIOR CHANGE.

b. MODIFICATIONS/CORRECTIONS: THE PROPOSED MILITARY STANDARD HAS BEEN CANCELLED. THE ECP IS THEREFORE REVISED TO REFLECT THE COMMERCIAL ITEM DESCRIPTION WHICH REPLACES IT. THIS CHANGE HAS BEEN INCORPORATED ON THE NOR.

c. QAP CHANGES NEEDED/INCLUDED: N/A

d. TM AFFECTED: N/A

e. OTHER SYSTEMS AFFECTED: N/A

f. CONTRACTS AFFECTED: DAAE20-99-D-0140

g. IMPLEMENTATION INSTRUCTIONS: AMSTA-LC-CSC-A WILL INCORPORATE THIS CHANGE IN THE ABOVE CONTRACT AT COST NOT TO EXCEED $872.00.

FOR ECPS:
- ☐ OPTIONAL
- ☒ MANDATORY
  - ☒ WITHOUT/ ☐ WITH OBSOLESCENCE
  - ☐ NO COST ☒ COST NTE $ 872.00

h. READINESS IMPACT: N/A

i. EOD IMPACT: N/A

j. VE SAVINGS:

k. RATIONALE/CALCULATIONS FOR COST CONCESSION (RFW) OR CONTRACTUAL COST ADJUSTMENT (RFD, ECP, VECP):

TOTAL $ N/A - %

$872.00 COST OF IMPLEMENTATION COVERS REPLACEMENT OF STAINLESS HINGES ALREADY PURCHASED BY THE CONTRACTOR.

l. OZONE DEPLETING SUBSTANCE ELIMINATED: YES ☐ NO ☒

L 0 S 3 0 5 6

AMSTA-AR-CCL-FS (70-37a) 26 Jan 01

MEMORANDUM FOR AMSTA-LC-CSC-A

SUBJECT: Transmittal of Completed Engineering Action Number L0S3056 and Implementation Data

1. The ARDEC Configuration Control Board Directive (CCBD), dated 23 Jan 01 and associated change documentation (encl), subject: MK 93 MOD I Mount / 6650435 are provided for expeditious action. If tasked to execute an action and implementation cannot be accomplished on or before the agreed to CCB date, the POC identified in paragraph 2 should be notified of the slippage by return endorsement with explanation/reason for the slippage, and a new planned implementation date.

2. The POC is Mr. Vernon, AMSTA-AR-CCL-FS, ext 28164, email vernonp.

LOREN BRUNTON
Chief, Small Caliber Systems Team

Encl

CF:
AMSTA-AR-QAD

L0S3056_19200_CP_-_0006_0001_U_N
April 18, 2001 10:06 AM

Vernon, Phil

From: Fender, CMSgt Wayne M
Sent: Monday, January 22, 2001 4:31 PM
To: Vernon, Phil
Subject: ECP L0S3056, 3057, 7028

Importance: High

The Air Force Liaison will concur with subject configuration actions.

Vr,

CMS Mike Fender

L0S3056_19200_CP_-_0007_0001_U_N
April 18, 2001 10:06 AM

FSC. SUP CLASS 5340

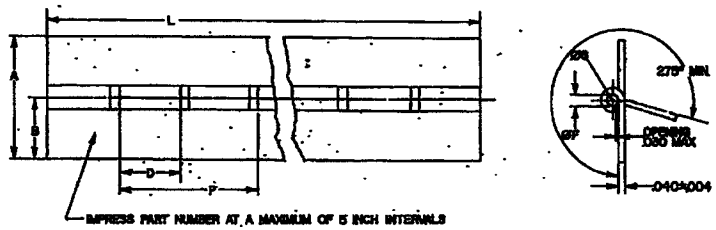

TABLE I BASE NUMBERS AND DIMENSIONS

DASH NO.	WIDTH A REF	WIDTH B ±.031	STOCK LENGTH L ±.03	KNUCKLE LENGTH 1/ D	PITCH 2/ P	KNUCKLE ØF	PIN ØG
9	1.062	.532	72.00	.490 +.002 -.008	1.000±.015	.096 +.007 -.001	.091 ±.002
10	1.250	.625	SEE				
11	1.500	.750	NOTE 2				
12	2.000	1.000					
13	1.062	.531	72.00				
14	1.250	.625	SEE	.623 +.000 -.010	1.250 +.015 -.003	.096 +.007 -.001	.091 ±.002
15	1.500	.750	NOTE 2				
16	2.000	1.000					

1/ SEE REQUIREMENT 3

2/ SEE REQUIREMENT 4

Ⓔ ENTIRE STANDARD REVISED

INCH - POUND

APPROVED 24 JUN 57 REVISED Ⓔ 6 JAN 89

P.A. ARMY—AR Other Cust NAVY—AS AIR FORCE—99	INTERNATIONAL INTEREST	TITLE HINGE, BUTT, CONTINUOUS (PIANO) .040 THICKNESS .091 PIN DIA	MILITARY STANDARD MS35822
PROCUREMENT SPECIFICATION MIL-H-9850	SUPERSEDES:		PAGE 1 OF 2

DD FORM 1 MAY 73 672-1 (COORDINATED) PREVIOUS EDITIONS OF THIS FORM ARE OBSOLETE 5340-1859

USER ACTIVITIES: NAVY—MC

REVIEWER ACTIVITIES: ARMY—AT, AV, MI, GL AIR FORCE—82 DLA—IS

DISTRIBUTION STATEMENT A. Approved for public release; distribution is unlimited. This military standard is approved for use by all Departments and Agencies of the Department of Defense. Intentions for all new engineering and design applications and for repetitive use shall be made from this document when applicable.

AMSC N/A

Information Handling Services, DODSTD Issue DW0004

L0S3056_19200_CP_-_0008_0001_U_N
April 18, 2001 10:07 AM

FSC CLASS 5340

REQUIREMENTS:

1. MATERIAL: A. ALUMINUM-ALLOY-SHEET, 3004 OR 3004 HALF-HARD, UNS (A93003) IN ACCORDANCE WITH QQ-A-250/8. ALUMINUM-ROD-SHEET, HALF-HARD (UNS A93003) IN ACCORDANCE WITH QQ-A-225/7.

   B. BRASS-SHEET-ALLOY 260 (UNS C26000) TEMPER HALF-HARD, IN ACCORDANCE WITH QQ-B-613. COPPER-ROD-ALLOY 260 (UNS C26000), TEMPER HALF-HARD IN ACCORDANCE WITH QQ-W-626.

   C. CORROSION RESISTANT STEEL-SHEET-CLASS 301, (UNS S30100), 302 (UNS S30200), OR 304 (UNS S30400), CONDITION A, TEMPER ANNEALED, IN ACCORDANCE WITH QQ-S-766. CORROSION RESISTANT STEEL-ROD-FORM I, CONDITION B, CONDITION 302 (UNS S30200), 304 (UNS S30400), 305 (UNS S30500) AND 316 (UNS S31600). IN ACCORDANCE WITH ASTM A313.

   D. CARBON STEEL-SHEET-COLD-ROLLED, TEMPER NO. 4 IN ACCORDANCE WITH QQ-S-698. CARBON STEEL-ROD-COMPOSITION 1018 (UNS G10180), 1020 (UNS G10200). IN ACCORDANCE WITH QQ-W-461.

   E. CARBON STEEL-SHEET-COLD-ROLLED TEMPER NO. 4 IN ACCORDANCE WITH QQ-S-698. COPPER-ROD-ALLOY 260 (UNS C26000) TEMPER HALF-HARD IN ACCORDANCE WITH QQ-W-626.

2. FINISH: MATERIAL A, B, C AND D SHALL BE PLAIN (UNCOATED). WHEN SPECIFIED, MATERIALS D SHALL BE ZINC PLATED IN ACCORDANCE WITH ASTM B633 TYPE II, FE/ZN 13 OR CADMIUM PLATED IN ACCORDANCE WITH QQ-P-416 TYPE II CLASS 1. MATERIAL E SHALL BE CADMIUM PLATED IN ACCORDANCE WITH QQ-P-416, TYPE II, CLASS 1.

1/ 3. HINGELAP - END HINGELAP SHALL BE A MINIMUM 1/2 OF HINGELAP.

2/ 4. FORCE - CHARACTER TOLERANCE OF FORCE IS ±.015 INCHES IN ANY 36 INCH SPANNER.

5. PART NUMBER - THE MS PART NUMBER CONSISTS OF THE MS NUMBER PLUS THE DASH NUMBER FOLLOWED BY THE MATERIAL CODE FOR MATERIAL FROM REQUIREMENT 1.

EXAMPLE: MS35822 - 10 B

- MATERIAL CODE
- DASH NUMBER
- BASIC MS NUMBER

WHEN PROTECTIVE FINISH IS REQUIRED FOR MATERIAL D, ADD F TO THE PART NUMBER.

NOTES:

1. ALL DIMENSIONS ARE IN INCHES UNLESS OTHERWISE SPECIFIED.
2. HINGES SHALL BE STOCKED AND ISSUED IN LENGTHS OF 72.00 INCHES. APPLICATION MAY BE OF ANY LENGTH WITHIN THE ABOVE LENGTH.
3. IN THE EVENT OF A CONFLICT BETWEEN THE TEXT OF THIS STANDARD AND THE REFERENCES CITED HEREIN, THE TEXT OF THIS STANDARD SHALL TAKE PRECEDENCE.
4. REFERENCED GOVERNMENT OR (NON-GOVERNMENT) DOCUMENTS OF THE ISSUE LISTED IN THE ISSUE OF THE DEPARTMENT OF DEFENSE INDEX OF SPECIFICATIONS AND STANDARDS (DODISS) SPECIFIED IN THE SOLICITATION FORM A PART OF THIS STANDARD TO THE EXTENT SPECIFIED HEREIN.
5. DASH NUMBER 1 THRU 8 ARE CHECKERED AND NEW DASH NUMBERS ASSIGNED FOR 1 DIMENSION (72.00) INCHES.

TABLE II. CROSS REFERENCE OF CHECKERED DASH NUMBERS

CHECKERED	LENGTH	REFERENCE	LENGTH
MS35822-1	36	MS35822-9	72
MS35822-2	36	MS35822-10	72
MS35822-3	36	MS35822-11	72
MS35822-4	36	MS35822-12	72
MS35822-5	36	MS35822-13	72
MS35822-6	36	MS35822-14	72
MS35822-7	36	MS35822-15	72
MS35822-8	36	MS35822-16	72

APPROVED 24 JUN 57 REVISED (E) FOR CHANGES SEE PAGES 1 AND 2

P.A. ARMY—AR Naval Ships NAVY—AS AIR FORCE—99	INTERNATIONAL INTEREST	TITLE HINGE, BUTT, CONTINUOUS (PIANO) .040 THICKNESS .091 PIN DIA	MILITARY STANDARD MS35822
PROCUREMENT SPECIFICATION MIL-H-9650	SUPERSEDES		PAGE 2 OF 2

DD FORM 1 MAY 72 672-1 (COORDINATED) PREVIOUS EDITIONS OF THIS FORM ARE OBSOLETE 5340-1959

★U.S. GOVERNMENT PRINTING OFFICE:1969 684-833/12864

USER ACTIVITIES: NAVY—MC

REVIEWER ACTIVITIES: ARMY—AT,AV,ML,SL AIR FORCE—82 DLA—IS

DISTRIBUTION STATEMENT A. Approved for public release; distribution is unlimited. This military standard is approved for use by all Departments and Agencies of the Department of Defense. Distribution: Total package or portions thereof, as required, may be released to foreign governments where applicable.

AMSC N/A

INCH-POUND

A-A-55590A
31 October 1997
SUPERSEDING
A-A-55590
31 October 1994

COMMERCIAL ITEM DESCRIPTION

HINGE, BUTT, CONTINUOUS (PIANO) .040 THICKNESS, .091 PIN DIA

The General Services Administration has authorized the use of this Commercial Item Description for all Federal Agencies.

1. SCOPE. This Commercial Item Description (CID) covers commercial and industrial quality, continuous butt piano hinges suitable for use on cases, chests, and any other adaptable surface.

2. SALIENT CHARACTERISTICS.

2.1 Butt hinges and pin hinge furnished under this CID shall conform to the dimensions as specified in Table I and figure below.

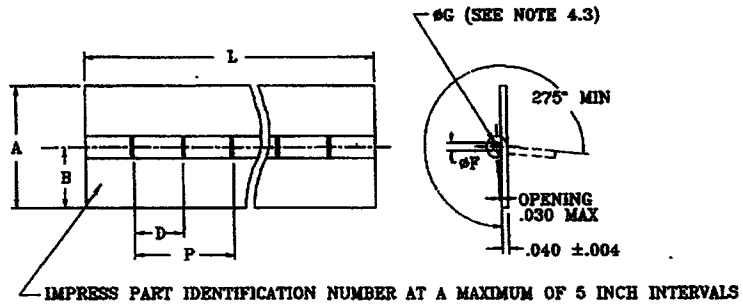

TABLE I. DASH NUMBERS AND DIMENSIONS

DASH No.	WIDTH A REF	WIDTH B ±.031	KNUCKLE LENGTH D 1/	PITCH P 2/	KNUCKLE ØF +.007 -.001	PIN ØG	STOCK LENGTH L ±.03
8	-	-	-	-	-		
9	1.062	.531					
10	1.250	.625					72.00 SEE SAL. CHAR. 2.6
11	1.500	.750	.490+.002 -.008	1.000±.015	.096	.091±.001	
12	2.000	1.000					
13	1.062	.531					
14	1.250	.625	.623+.000 -.010	1.250+.015 -.003			72.50 SEE SAL. CHAR. 2.6
15	1.500	.750					
16	2.000	1.000					

1/ SEE SAL. CHAR. 2.4
2/ SEE SAL. CHAR. 2.5

BENEFICIAL COMMENTS, RECOMMENDATIONS, ADDITIONS, CLARIFICATIONS, ETC., AND DATA WHICH MAY IMPROVE THIS DOCUMENT SHOULD BE SENT TO: DEFENSE INDUSTRIAL SUPPLY CENTER, ATTN: DISC-EED, 700 ROBBINS AVENUE, PHILADELPHIA, PA. 19111-5096.

DISTRIBUTION STATEMENT A. Approved for public release; distribution is unlimited.

Information Handling Services, DODSTD Issue DW0004

L0S3056_19200_CP__0010_0001_U_N
April 18, 2001 10:07 AM

2.2 MATERIAL:

A. Aluminum-leaf-Temper, H24 or H34 half-hard, (UNS A95052) in accordance with QQ-A-250/8.
Aluminum-pin-Temper, half-hard, (UNS A95052) in accordance with QQ-A-225/7.

B. Brass-leaf-Alloy 268 (UNS C26800) temper HO2, in accordance with ASTM B36.
Copper-pin-Alloy 260 (UNS C26000) temper HO2, in accordance with ASTM B134.

C. Corrosion resistant steel-leaf-Class 301 (UNS S30100), 302 (UNS S30200) or 304 (UNS S30400), condition A, temper annealed, in accordance with QQ-S-766.
Corrosion resistant steel-pin-Form 1, condition B, composition 302 (UNS S30200), 304 (UNS S30400), 305 (UNS S30500) and 316 (UNS S31600) in accordance with ASTM A313.

D. Carbon-steel-leaf-Cold-rolled, temper no. 4 in accordance with QQ-S-698.
Carbon-steel-pin-Composition 1010 (UNS G10100), 1020 (UNS G10200),. in accordance with ASTM A641.

E. Carbon steel leaf-cold-rolled, temper no. 4 in accordance with QQ-S-698.
Copper-pin-Alloy 260 (UNS C26000), temper HO2 in accordance with ASTM B134.

2.3 FINISH: Material A, B and D shall be plain (uncoated). When specified, material A shall be chemical conversion coated in accordance with MIL-C-5541, class 1A, material B shall be clear coated (one mil minimum) in accordance with A-A-344, and material D shall be zinc plated in accordance with ASTM B633, TYPE II, FE/ZN 13. Material C shall be passivated in accordance with QQ- P-35. Material E shall be cadmium plated in accordance with QQ-P-416, Type II, Class 1.

2.4. Knuckles: End knuckles shall be a minimum of 1/2 of knuckle.

2.5 Pitch: Cumulative tolerance on pitch is ±.015 inches in any 36 inch segment.

2.6 Hinges shall be stocked and issued in lengths of 72.00 inches or 72.50 inches as specified. Application may be of any length within the above length.

2.7 Workmanship. The hinges furnished shall be free from imperfections which may impair durability or serviceability.

3. QUALITY ASSURANCE PROVISIONS.

3.1 Product conformance. The products provided shall meet the salient characteristics of this commercial item description, conform to the producer's own drawings, specifications, standards, and the quality assurance practices, and be the same product offered for sale in the commercial market. The government reserves the right to require proof of such performance.

4. NOTES:

4.1 Unless otherwise specified, all dimensions are in inches.

4.2 Unless otherwise specified in the contract or purchase order, packaging shall be in accordance with ASTM D3951.

4.3 Pin without butt leaves will be supplied when the part identification number specifies dash 8.

4.4 The part number identification number (PIN) shall consist of the basic commercial item description number followed by a dash number from Table I, and material code. When protective finish is required for material A or D, add "F" to the PIN.

Example: AA55590-10 B

- Material code
- Dash number
- Basic number

Information Handling Services, DODSTD Issue DW0004

L0S3056_19200_CP__0011_0001_U_N
April 18, 2001 10:07 AM

Military Interests:

Custodian:
Army-AR
Navy-AS
Air Force-99

Review activities:
Army-AT, AV, MI
Navy-MC
Air Force-82

Civil Agency Coordination Activity:
GSA-FSS

Preparing Activity:
DLA-IS

(Project No. 5340-2397)

Information Handling Services, DODSTD Issue DW0004

L0S3056_19200_CP__0012_0001_U_N
April 18, 2001 10:08 AM

L0S3057

Attachment 009

January 2, 2001

AMSTA-AR-CCL-FS (70-37)

MEMORANDUM FOR

AMSTA-LC-CSI-H AMSTA-AR-QAWC AMSTA-LC-CSC-A
MCLMO-LMC NVLMO AFLMO

SUBJECT: Notice of Configuration Control Board Meeting - Small Arms Weapons

1. Enclosed documentation listed below is submitted for your evaluation, determination of life cycle impact and recommendation for approval or disapproval. It will be considered at a Configuration Control Board Meeting in the AMSTA-AR-CCL (R) conference room A, Bldg 62, 2nd floor, at 1000 on 23 Jan 01.

TYPE	CONTROL	CONTRACT	PART #	END ITEM
ECP	L0S3056	DAAE20-99-D-0140	6650435	MK93 Mod I
ECP	L0S3057	DAAE20-99-D-0140	6650671	MK93 Mod I
RFD	L0S7028	DAAE20-99-D-0140	6650433	MK93 Mod I

2. Request your representative, IAW the formalized AMCCOM Roster, participate in this meeting. If your representative cannot attend this CCB, please respond by 1st End below at least two working days prior to the meeting.

3. Failure to respond or attend shall constitute a "no input / no vote" by the addressee. Concurrence in taskers and suspense dates determined at the CCB will be assumed. Any non-concurrences will be brought to the Board in writing, or to this office NLT 1 working day after the Board. Signature will be at Division Chief or designated alternate level.

4. Point of contact is Mr. Phil Vernon, AMSTA-AR-CCL-FS, extension 28164, email vernonp.

Philip L. Vernon
Philip L. Vernon
Small Caliber Systems Team

Encl

FOR AMSTA-AR-CCL-FS

X Concur with CCB decision. 23 Jan 01

_____ Other - See following statement(s).

L0S3057_19200_CP_-_0010_0001_U_N
April 18, 2001 10:13 AM

Vernon, Phil

From: Fender, CMSgt Wayne M
Sent: Monday, January 22, 2001 4:31 PM
To: Vernon, Phil
Subject: ECP.L0S3056, 3057, 7028

Importance: High

The Air Force Liaison will concur with subject configuration actions.

Vr,

CMS Mike Fender

L0S3057_19200_CP_-_0011_0001_U_N
April 18, 2001 10:13 AM

Designation: A 108 – 99

An American National Standard

AMERICAN SOCIETY FOR TESTING AND MATERIALS
100 Barr Harbor Dr., West Conshohocken, PA 19428
Reprinted from the Annual Book of ASTM Standards, Copyright ASTM

Standard Specification for Steel Bars, Carbon, Cold-Finished, Standard Quality[1]

This standard is issued under the fixed designation A 108; the number immediately following the designation indicates the year of original adoption or, in the case of revision, the year of last revision. A number in parentheses indicates the year of last reapproval. A superscript epsilon (ε) indicates an editorial change since the last revision or reapproval.

This standard has been approved for use by agencies of the Department of Defense.

1. Scope

1.1 This specification covers standard quality cold-finished carbon steel bars produced to chemical compositions. Standard quality cold-finished bars are suitable for heat treatment, for machining into components, or for use in the as-finished condition as shafting, or in constructional applications, or for other similar purposes (Note 1). Grades of steel are identified by grade numbers or by chemical composition.

NOTE 1—A guide for the selection of steel bars is contained in Practice A 400.

1.2 Material furnished under this specification shall conform to the applicable requirements of the current edition of Specification A 29/A 29M.

1.3 Some end uses may require material superior to standard quality involving one or more of the available designations shown under Supplementary Requirements. Supplementary requirements shall apply only when specified individually by the purchaser.

2. Referenced Documents

2.1 *ASTM Standards:*

A 29/A 29M Specification for Steel Bars, Carbon and Alloy, Hot-Wrought and Cold-Finished, General Requirements for[2]

A 370 Test Methods and Definitions for Mechanical Testing of Steel Products[3]

A 400 Practice for Steel Bars, Selection Guide, Composition, and Mechanical Properties[2]

A 510 Specification for General Requirements for Wire Rods and Coarse Round Wire, Carbon Steel[3]

A 576 Specification for Steel Bars, Carbon, Hot-Wrought, Special Quality[2]

E 45 Test Methods for Determining the Inclusion Content of Steel[4]

E 527 Practice for Numbering Metals and Alloys (UNS)[5]

2.2 *Other Documents:*

SAE J1086 Recommended Practice for Numbering Metals and Alloys (UNS)[6]

SAE Handbook[6]

Federal Standard 66 C Steel, Chemical Composition and Hardenability[7]

AISI Steel Product Manual for Cold Finished Bars[8]

3. Terminology

3.1 Definition:

3.1.1 *standard quality*—cold-finished carbon steel bars produced from special quality hot-wrought carbon steel bars or rods of equivalent quality.

3.1.1.1 *Discussion*—Bars of standard quality are commonly produced in standard chemical grade compositions or to mechanical property specifications and are subject to product analysis tolerances.

3.1.1.2 *Discussion*—The available sections and sizes are covered by Specification A 29/A 29M. The bars are normally produced in cut lengths but some small sizes are supplied in coils. The producer should be consulted regarding sections and sizes available in coils.

4. Ordering Information

4.1 Orders for cold-finished bars to this specification should include the following items to adequately describe the material:

4.1.1 Name of material,

4.1.2 ASTM specification number and date of issue,

4.1.3 Chemical composition grade designation or limits,

4.1.4 Silicon, if required,

4.1.5 Additional machinability-enhancing elements (see Footnote D to Table 1),

4.1.6 Condition,

4.1.7 Quality,

4.1.8 Shape (round, hex, square, etc.), size, and length,

[1] This specification is under the jurisdiction of ASTM Committee A-1 on Steel, Stainless Steel, and Related Alloys and is the direct responsibility of Subcommittee A01.15 on Bars.

Current edition approved March 10, 1999. Published June 1999. Originally published as A 108–36 T. Last previous edition A 108–95.

[2] *Annual Book of ASTM Standards*, Vol 01.05.

[3] *Annual Book of ASTM Standards*, Vol 01.03.

[4] *Annual Book of ASTM Standards*, Vol 03.01.

[5] *Annual Book of ASTM Standards*, Vol 01.01.

[6] Available from Society of Automotive Engineers, 400 Commonwealth Drive, Warrendale, PA 15096.

[7] Available from the Standardization Documents Order Desk, Bldg. 4, Section D, 700 Robbins Ave., Philadelphia, PA 19111-5094 Attn: NPODS.

[8] Available from the American Iron and Steel Institute, 150 East 42nd St., New York, NY 10017.

COPYRIGHT 2000 American Society for Testing and Materials

L0S3057_19200_CP_-_0012_0001_U_N
April 18, 2001 10:13 AM

Designation: A 108 – 99

An American National Standard

AMERICAN SOCIETY FOR TESTING AND MATERIALS
100 Barr Harbor Dr., West Conshohocken, PA 19428
Reprinted from the Annual Book of ASTM Standards, Copyright ASTM

Standard Specification for Steel Bars, Carbon, Cold-Finished, Standard Quality[1]

This standard is issued under the fixed designation A 108; the number immediately following the designation indicates the year of original adoption or, in the case of revision, the year of last revision. A number in parentheses indicates the year of last reapproval. A superscript epsilon (ε) indicates an editorial change since the last revision or reapproval.

This standard has been approved for use by agencies of the Department of Defense.

1. Scope

1.1 This specification covers standard quality cold-finished carbon steel bars produced to chemical compositions. Standard quality cold-finished bars are suitable for heat treatment, for machining into components, or for use in the as-finished condition as shafting, or in constructional applications, or for other similar purposes (Note 1). Grades of steel are identified by grade numbers or by chemical composition.

NOTE 1—A guide for the selection of steel bars is contained in Practice A 400.

1.2 Material furnished under this specification shall conform to the applicable requirements of the current edition of Specification A 29/A 29M.

1.3 Some end uses may require material superior to standard quality involving one or more of the available designations shown under Supplementary Requirements. Supplementary requirements shall apply only when specified individually by the purchaser.

2. Referenced Documents

2.1 *ASTM Standards:*

A 29/A 29M Specification for Steel Bars, Carbon and Alloy, Hot-Wrought and Cold-Finished, General Requirements for[2]

A 370 Test Methods and Definitions for Mechanical Testing of Steel Products[3]

A 400 Practice for Steel Bars, Selection Guide, Composition, and Mechanical Properties[2]

A 510 Specification for General Requirements for Wire Rods and Coarse Round Wire, Carbon Steel[2]

A 576 Specification for Steel Bars, Carbon, Hot-Wrought, Special Quality[2]

E 45 Test Methods for Determining the Inclusion Content of Steel[4]

E 527 Practice for Numbering Metals and Alloys (UNS)[5]

2.2 *Other Documents:*

SAE J1086 Recommended Practice for Numbering Metals and Alloys (UNS)[6]

SAE Handbook[6]

Federal Standard 66 C Steel, Chemical Composition and Hardenability[7]

AISI Steel Product Manual for Cold Finished Bars[8]

3. Terminology

3.1 Definition:

3.1.1 *standard quality*—cold-finished carbon steel bars produced from special quality hot-wrought carbon steel bars or rods of equivalent quality.

3.1.1.1 *Discussion*—Bars of standard quality are commonly produced in standard chemical grade compositions or to mechanical property specifications and are subject to product analysis tolerances.

3.1.1.2 *Discussion*—The available sections and sizes are covered by Specification A 29/A 29M. The bars are normally produced in cut lengths but some small sizes are supplied in coils. The producer should be consulted regarding sections and sizes available in coils.

4. Ordering Information

4.1 Orders for cold-finished bars to this specification should include the following items to adequately describe the material:

4.1.1 Name of material,

4.1.2 ASTM specification number and date of issue,

4.1.3 Chemical composition grade designation or limits,

4.1.4 Silicon, if required,

4.1.5 Additional machinability-enhancing elements (see Footnote D to Table 1),

4.1.6 Condition,

4.1.7 Quality,

4.1.8 Shape (round, hex, square, etc.), size, and length,

[1] This specification is under the jurisdiction of ASTM Committee A-1 on Steel, Stainless Steel, and Related Alloys and is the direct responsibility of Subcommittee A01.15 on Bars.

Current edition approved March 10, 1999. Published June 1999. Originally published as A 108–26 T. Last previous edition A 108–95.

[2] *Annual Book of ASTM Standards*, Vol 01.05.

[3] *Annual Book of ASTM Standards*, Vol 01.03.

[4] *Annual Book of ASTM Standards*, Vol 03.01.

[5] *Annual Book of ASTM Standards*, Vol 01.01.

[6] Available from Society of Automotive Engineers, 400 Commonwealth Drive, Warrendale, PA 15096.

[7] Available from the Standardization Documents Order Desk, Bldg. 4, Section D, 700 Robbins Ave., Philadelphia, PA 19111-5094 Attn: NPODS.

[8] Available from the American Iron and Steel Institute, 150 East 42nd St., New York, NY 10017.

COPYRIGHT 2000 American Society for Testing and Materials

L0S3057_19200_CP_-_0012_0001_U_N
April 18, 2001 10:13 AM

TABLE 1 Composition of Cold-Finished Carbon Steel Bars

Note 1—Grade designations and compositions correspond to the respective AISI designations and compositions.

UNS Designation[A]	Grade Designation	Carbon, %	Manganese, %	Phosphorus, %	Sulfur, %
Open-Hearth, Basic-Oxygen, and Electric-Furnace Grades[B,C,D]					
G 10080	1008	0.10 max	0.30-0.50	0.040 max	0.050 max
G 10100	1010	0.08-0.13	0.30-0.60	0.040 max	0.050 max
G 10120	1012	0.10-0.15	0.30-0.60	0.040 max	0.050 max
G 10140	1014	0.10-0.16	0.60-0.90	0.040 max	0.050 max
G 10160	1016	0.13-0.18	0.60-0.90	0.040 max	0.050 max
G 10180	1018	0.15-0.20	0.60-0.90	0.040 max	0.050 max
G 10200	1020	0.18-0.23	0.30-0.60	0.040 max	0.050 max
G 10220	1022	0.18-0.23	0.70-1.00	0.040 max	0.050 max
G 10250	1025	0.22-0.28	0.30-0.60	0.040 max	0.050 max
G 10300	1030	0.28-0.34	0.60-0.90	0.040 max	0.050 max
G 10350	1035	0.32-0.38	0.60-0.90	0.040 max	0.050 max
G 10400	1040	0.37-0.44	0.60-0.90	0.040 max	0.050 max
G 10450	1045	0.43-0.50	0.60-0.90	0.040 max	0.050 max
G 10500	1050	0.48-0.55	0.60-0.90	0.040 max	0.050 max
G 10600	1060	0.55-0.65	0.60-0.90	0.040 max	0.050 max
Open-Hearth, Basic-Oxygen, and Electric-Furnace Free Cutting Grades[B,C,E]					
G 11170	1117	0.14-0.20	1.00-1.30	0.040 max	0.08-0.13
G 11180	1118	0.14-0.20	1.30-1.60	0.040 max	0.08-0.13
G 11370	1137	0.32-0.39	1.35-1.65	0.040 max	0.08-0.13
G 11410	1141	0.37-0.45	1.35-1.65	0.040 max	0.08-0.13
G 11440	1144	0.40-0.48	1.35-1.65	0.040 max	0.24-0.33
G 11510	1151	0.48-0.55	0.70-1.00	0.040 max	0.08-0.13
G 12110	1211	0.13 max	0.60-0.90	0.07-0.12	0.10-0.15
G 12120	1212	0.13 max	0.70-1.00	0.07-0.12	0.16-0.23
G 12130	1213	0.13 max	0.70-1.00	0.07-0.12	0.24-0.33
...	12L14[F]	0.15 max	0.85-1.15	0.04-0.09	0.26-0.35
G 12150	1215	0.09 max	0.75-1.05	0.04-0.09	0.26-0.35

[A] New designations established in accordance with Practice E 527 and SAE J1086.
[B] When silicon is required, the following ranges and limits are commonly specified: 0.10 % max, 0.10-0.20 %, 0.15-0.35 %, or 0.20-0.40 %.
[C] When required, lead is specified as an added element to a standard steel. A range from 0.15-0.35 %, inclusive, is commonly specified. Such a steel is identified by inserting the letter "L" between the second and third numeral of the grade number, for example, 11L17. A cast or heat analysis is not determinable when lead is added to the bulk stream.
[D] The elements bismuth, calcium, selenium, or tellurium may be added as agreed upon between purchaser and supplier.
[E] Grades 1211, 1212, 1213, 12L14, and 1215 are not supplied with a specified silicon content.
[F] Lead content shall be 0.15-0.35 %.

4.1.9 Report of heat analysis, if required,

4.1.10 Bad use,

4.1.11 Additions to the specification and special or supplementary requirements, if required, and

4.1.12 For coiled product, the coil weights, inside diameter and outside diameter limitations, when required.

Note 2—A typical ordering description is as follows: Steel Bar, ASTM A 108, dated _____; SAE 1117; Coarse Grain; Cold Drawn; 6000 lb of 1.500-in. diameter by 10.0 to 12.0 ft long; Heat Analysis Required; Screw Machine Parts.

5. Materials and Manufacture

5.1 *Melting Practice*—The steel shall be made by one or more of the following primary processes: open-hearth, basic-oxygen, or electric-furnace. The primary melting may incorporate separate degassing or refining and may be followed by secondary melting using electroslag remelting or vacuum-arc remelting. Where secondary melting is employed, the heat shall be defined as all of the ingots remelted from a single primary heat.

5.2 *Deoxidation*:

5.2.1 Unless otherwise specified, the steel may be rimmed, capped, semi-killed, or killed at the manufacturer's option.

5.2.2 When required, the deoxidation practice, including killed steel, may be specified.

5.3 *Discard*—Sufficient discard shall be made to ensure freedom from pipe and undue segregation.

5.4 *Redraw Stock*—The bars shall be produced from special quality hot-wrought carbon steel bars (Specification A 576) or from hot-wrought rods designated for cold-finished bars (Specification A 510).

5.5 *Condition*—The bars shall be furnished in one of the following conditions as specified by the purchaser:

5.5.1 *Rounds*:

5.5.1.1 Cold drawn,

5.5.1.2 Cold drawn, turned, and polished,

5.5.1.3 Cold drawn, ground, and polished,

5.5.1.4 Cold drawn, turned, ground, and polished,

5.5.1.5 Hot wrought, turned, and polished, or

5.5.1.6 Hot wrought, turned, ground, and polished.

5.5.2 *Squares, Hexagons*—Cold drawn.

5.5.3 *Flats*:

5.5.3.1 Cold drawn or

5.5.3.2 Cold rolled.

5.6 *Heat Treatment*:

5.6.1 Unless otherwise specified, the bars shall be furnished as cold finished except that when the maximum of the carbon range is over 0.55 % they shall be annealed for cold finishing.

5.6.2 When property characteristics are required that are not available for the specified grade as developed in the as-rolled

COPYRIGHT 2000 American Society for Testing and Materials

L0S3057_19200_CP_-_0013_0001_U_N
April 18, 2001 10:13 AM

cold-finished condition, the following thermal treatments can be ordered:

5.6.2.1 Annealed and cold finished,

5.6.2.2 Normalized and cold finished,

5.6.2.3 Cold drawn and stress relieved, or

5.6.2.4 Carbon restoration anneal to overcome surface decarburization on cold-drawn bars. (For round bars produced by turning, surface decarburization is removed during the manufacturing process.)

6. Chemical Composition

6.1 *Chemical Composition*:

6.1.1 The steel shall conform to the chemical composition limits specified in Table 1 for the grade specified by the purchaser.

6.1.2 Carbon steels not listed in Table 1 can be specified. Steels may be selected from Specifications A 510 and A 576; Federal Standard 66 C; the SAE Handbook; or the AISI Steel Product Manual for Carbon Steel Bars.

6.1.3 When a steel cannot be identified by a standard grade number in accordance with 6.1.1 and 6.1.2, the limits for each required element may be specified using the chemical ranges shown in the table (Heat Analysis Chemical Ranges and Limits of Carbon Steel Bars) of Specification A 29/A 29M.

6.1.4 When additional machinability-enhancing elements are specified in accordance with Footnote D to Table 1, the specified content of the element or elements shall be agreed upon between purchaser and supplier.

6.2 *Heat Analysis*—An analysis of each heat shall be made by the manufacturer to determine the percentages of the elements specified. The analysis shall be made from a test sample preferably taken during the pouring of the heat. The chemical composition thus determined shall be reported to the purchaser or his representative when required by the purchase order, and shall conform to the specified requirements.

6.3 *Product Analysis*—A product analysis may be made by the purchaser. The chemical composition thus determined, as to elements required or restricted, shall conform to the ordered chemical composition subject to the permissible variations on product analysis of the table (Permissible Variations for Product Analysis of Carbon Steel) in Specification A 29/A 29M.

7. Workmanship, Finish, and Appearance

7.1 *Workmanship*—The bars shall be free of pipe, cracks, and flakes. Within the limits of good manufacturing and inspection practices, the bars shall be free of injurious seams, laps, segregation, or other imperfections which, due to their nature, degree, or extent, will interfere with the use of the material in machining or fabrication of suitable parts.

7.2 *Finish*:

7.2.1 Unless otherwise specified, the bars shall have a commercial bright smooth surface finish obtained by conventional cold-finishing operations such as cold drawing, cold rolling, or turning and polishing.

7.2.2 When required, bars may be specified to be ground and polished, turned and polished, or turned, ground, and polished.

7.2.3 Bars that are thermal treated after cold finishing may have a discolored or oxidized surface.

7.3 *Oiling*—The bars shall be given a surface coating of oil or other rust inhibitor to protect against rust during shipment.

8. Certification

8.1 Upon request of the purchaser in the contract or order, a manufacturer's certification that the material was manufactured and tested in accordance with this specification together with a report of the test results shall be furnished at the time of shipment. If bismuth, selenium, tellurium, or calcium are added in accordance with Footnote D of Table 1, the presence of these additional elements shall be noted on the certification.

9. Keywords

9.1 carbon steel bars; cold-finished steel bars; steel bars

SUPPLEMENTARY REQUIREMENTS

One or more of the following supplementary requirements shall be applied only when specified by the purchaser in the inquiry, contract, or order. Details of these supplementary requirements shall be agreed upon in writing by the manufacturer and the purchaser. Supplementary requirements shall in no way negate any requirement of the specification itself.

S1. Cold Working Quality

S1.1 The classification encompasses bars subject to severe cold plastic deformation such as, but not limited to, upsetting, heading, forging, forward or backward extrusion.

S1.2 If the type of steel or chemical composition does not have adequate cold working characteristics, appropriate thermal treatments should be specified.

S1.3 When Supplementary Requirement S1 is specified, the bars shall be produced by manufacturing practices and subjected to mill tests and inspection and freedom from injurious surface imperfections to the extent that the bars shall be suitable for the manufacture of identified parts. The quality requirements of individual application vary.

S2. Special Surface Quality

S2.1 Special surface steels are produced with exacting control and appropriate inspection and surface preparation to minimize the frequency and degree of seams and other surface imperfections.

S3. Special Internal Soundness Requirement

S3.1 Special internal soundness is relative freedom from segregation and porosity, as evaluated by means of a macroetch test which is performed on representative billet or bar samples. The test consists of deep etching a cross section in a hot acid

COPYRIGHT 2000 American Society for Testing and Materials

L0S3057_19200_CP_-_0014_0001_U_N
April 18, 2001 10:14 AM

solution and examination to evaluate soundness. An alternative method consists of fracturing a billet section and examination of the fracture to evaluate soundness.

S4. Nonmetallic Inclusion Requirements

S4.1 The nonmetallic inclusion requirement comprises a metallographic examination of longitudinal sections to determine the nature and frequency of the nonmetallic inclusions. Experience indicates that samples taken midway between the center and surface of the bloom, billet, slab, or bar are most representative of the average inclusion content of the lot involved. The test specimen is generally heated and quenched to harden it before being polished to avoid polishing pits. The specimen is examined at 100 diameters. Methods for determining the nonmetallic inclusion content of steel are described in Test Methods E 45.

S4.2 For resulfurized steels, much of the sulfur is present as sulfide inclusions. For this reason, these steels are not generally produced to inclusion rating.

S5. Special Heat-Treating Requirements

S5.1 *Special heat treating (hardenability)* is a term used when the purchaser specifies as a requirement the ability of a steel to heat treat to specified mechanical property values that the purchaser must meet after his heat treatment. Care should be taken so that the desired mechanical property values are compatible with the chemical composition, size, and cross section of the steel.

S5.2 Hardenability band limits have been established for 1038H, 1045H, and 1541H as well as other grades that appear in the SAE Handbook.

S6. Grain Size

S6.1 The steel shall conform to either the coarse austenitic grain size requirement (except as stated in S6.2), or the fine austenitic grain size requirement of Specification A 29/A 29M.

S6.2 Certain elements, or combinations of elements, such as manganese, sulfur, and lead tend to produce grain refinement and it is technically inappropriate to ensure coarse grain size as measured by the McQuaid-Ehn test on high manganese, high sulfur, and leaded steels such as 1144, 1151, and 11L41.

S7. Restricted Incidental Elements

S7.1 The purchaser may specify maximum requirements for copper, nickel, chromium, molybdenum, or other elements.

S8. Thermal Treatment

S8.1 When required, the purchaser may specify that the material be stress relieved, annealed to specified structure, annealed to no specified structure, or normalized.

S9. Mechanical Properties

S9.1 When required, cold-finished bars can be supplied to mechanical properties. Mechanical properties shall be determined in accordance with Test Methods and Definitions A 370.

The American Society for Testing and Materials takes no position respecting the validity of any patent rights asserted in connection with any item mentioned in this standard. Users of this standard are expressly advised that determination of the validity of any such patent rights, and the risk of infringement of such rights, are entirely their own responsibility.

This standard is subject to revision at any time by the responsible technical committee and must be reviewed every five years and if not revised, either reapproved or withdrawn. Your comments are invited either for revision of this standard or for additional standards and should be addressed to ASTM Headquarters. Your comments will receive careful consideration at a meeting of the responsible technical committee, which you may attend. If you feel that your comments have not received a fair hearing you should make your views known to the ASTM Committee on Standards, 100 Barr Harbor Drive, West Conshohocken, PA 19428.

COPYRIGHT 2000 American Society for Testing and Materials

L0S3057_19200_CP_-_0015_0001_U_N
April 18, 2001 10:14 AM

CCL-FS

ENGINEERING CHANGE PROPOSAL

(SHORT FORM)
(See MIL-STD-481 for Instructions)

DATE (YYMMDD): 001211

Form Approved OMB No. 0704-0188

PROCURING ACTIVITY NUMBER: LOS3057

1. ORIGINATOR NAME AND ADDRESS:
CAPCO, INC.
1328 WINTERS AVE.
GRAND JUNCTION, CO 81501

2. CONTRACT NUMBER AND DIRECTION: DAAE20-99-D-0140/0002

3. PROCURING CONTRACTING OFFICER: Kristan Mendoza

4. TYPE OF CHANGE:

5. DEP NUMBER / REV / AMEND	6. CAGE CODE	7. CLASS OF ECP	8. JUST. CODE	9. PRIORITY
01408004	04099	I	C	R

10. SPECIFICATIONS AFFECTED

CAGE CODE	SPECIFICATION / DOCUMENT NO	REV

11. DRAWINGS AFFECTED

CAGE CODE	NUMBER	REV
53711	6650671	C
19200	12012063	B

12. CONFIGURATION ITEM NOMENCLATURE / TYPE DESIGNATION / WEAPON SYSTEM CODE: MK93 MOD 1

13. IN PRODUCTION: [ ] YES [X] NO

14. LOWEST ASSEMBLY AFFECTED

NOMENCLATURE	PART NO	NSN
Catchbag/Frame Assembly (NOR 001)	6650723	
Pintle Adaptor/Arm Assy.(NOR 002)	12012070	

15. DESCRIPTION OF CHANGE
NOR 001: Clarify material call out and change weld requirement

NOR 002: Add tolerance block information

16. NEED FOR CHANGE
NOR 001: Material call out in Note 1 disagrees with material call out in parts list block; Weld change will permit one certification to govern production of similar products

NOR 002: No tolerances are given

17. EFFECT ON ASSOCIATED EQUIPMENT
None; No affect to safety

18. PRODUCTION EFFECTIVITY BY SERIAL NUMBER: All production

19. EFFECT ON PRODUCTION DELIVERY SCHEDULE: None

20. RECOMMENDED INTRODUCTION EFFECTIVITY: N/A

21. ESTIMATED KIT DELIVERY SCHEDULE:

22. ESTIMATED COSTS / SAVINGS: N/A

23. SUBMITTING ACTIVITY AUTHORIZED SIGNATURE: [signature]

23a. TITLE: Engineer

24. APPROVAL / DISAPPROVAL: A. RECOMMEND [X] APPROVAL [ ] DISAPPROVAL

B. APPROVAL	C. GOVERNMENT ACTIVITY	SIGNATURE	DATE YYMMDD
[ ] APPROVAL [ ] DISAPPROVAL			

D. APPROVAL	E. GOVERNMENT ACTIVITY	SIGNATURE	DATE YYMMDD
[X] APPROVAL [ ] DISAPPROVAL	TACOM-ARDEC, AMSTA-AR-CCL-F	[signature] for Ronald E. [illegible] Chief, CCAC Prod & Field Spt Team	2001/01/26

STMT A: UNLIMITED

LOS3057_19200_CP_-_0001_0001_U_N
April 18, 2001 10:10 AM

L 0S3057

NOTICE OF REVISION (NOR)

THIS REVISION DESCRIBED BELOW HAS BEEN AUTHORIZED FOR THE DOCUMENT NAMED.

1. DATE (YYMMDD): 001129

FORM APPROVED: OMB No. [illegible]

[illegible]

PLEASE DO NOT RETURN YOUR COMPLETED FORM TO EITHER OF THESE ADDRESSES. RETURN COMPLETED FORM TO THE GOVERNMENT ISSUING CONTRACTING OFFICER FOR THE CONTRACT/PROCURING ACTIVITY

2. PROCURING ACTIVITY NO.: LOS3057

3. DODAAC:

4. ORIGINATOR	5. ADDRESS (Street, City, State, Zip Code)	6. CAGE CODE	7. NOR NO.
	CAPCO, INC. 1328 WINTERS AVE. GRAND JUNCTION, CO 18501	04099	-001
8. TYPED NAME: Ed Repetire		7. CAGE CODE: 53711	8. DOCUMENT NO.: 8650671

9. TITLE OF DOCUMENT	10. REVISION LETTER		11. ECP NO.
	a. CURRENT	b. NEW	
Catch Bag Frame	C	D	

12. CONFIGURATION ITEM (OR SYSTEM) TO WHICH ECP APPLIES
MK93 MOD 1 MOUNT

13. DESCRIPTION OF REVISION

Delete Note 1 in its entirety.
Replace with: "Material: See Parts List below"

Change Parts List specification call outs in zone B1 to read:

Find Number	Specification
5	ASTM A108
4	ASTM A108
3	ASTM A569
2	ASTM A108
1	ASTM A108

Change Note 3 to: "Weld per MIL-STD-1261, MIL-STD-2219, or AWS-D1.1 Structural Welding Code."

14. THIS SECTION FOR GOVERNMENT USE ONLY

a. (X ONE)		
	X	(1) Existing document supplemented by this NOR may be used in manufacture.
		(2) Revised document must be received before manufacturer may incorporate this change.
		(3) Curtailed of reader document shall make above revision and furnish revised document.

b. ACTIVITY AUTHORIZED TO APPROVE CHANGE FOR GOVERNMENT: TACOM-ARDEC, AMSTA-AR-CCL-F

c. TYPED NAME (First, Middle Initial, Last):

d. TITLE	e. SIGNATURE	f. DATE SIGNED (YYMMDD)
Ronald E. Elbe Chief, CCAC Prod & Field Spt Team	[signature]	20010126

15.a. ACTIVITY ACCOMPLISHING REVISION	b. REVISION COMPLETED (Signature)	c. DATE SIGNED (YYMMDD)

DD FORM 1695, APR 92

STAT A: UNLIMITED

LOS3057_19200_CP_-_0002_0001_U_N
April 18, 2001 10:11 AM

NOTICE OF REVISION (NOR)

THIS REVISION DESCRIBED BELOW HAS BEEN AUTHORIZED FOR THE DOCUMENT NOTED.

1. DATE (YYMMDD)	001129
FORM APPROVED	OMB NO. [illegible]
2. PROCURING ACTIVITY NO.	LOS3057
3. DODAAC	

[illegible]
PLEASE DO NOT RETURN YOUR COMPLETED FORM TO EITHER OF THESE ADDRESSES. RETURN COMPLETED FORM TO THE GOVERNMENT ISSUING CONTRACTING OFFICER FOR THE CONTRACT/PROCURING ACTIVITY

4. ORIGINATOR	b. ADDRESS (Street, City, State, Zip Code)	5. CAGE CODE	6. NOR NO.
	CAPCO, INC. 1328 WINTERS AVE. GRAND JUNCTION, CO 18501	04099	-002
a. TYPED NAME		7. CAGE CODE	8. DOCUMENT NO.
Ed Repshire		19200	12012063

9. TITLE OF DOCUMENT	10. REVISION LETTER		11. ECP NO.
Body, Pintle Adaptor	a. CURRENT: B	b. NEW: C	

12. CONFIGURATION ITEM (OR SYSTEM) TO WHICH ECP APPLIES
MK93 MOD 1 MOUNT

13. DESCRIPTION OF REVISION

Add tolerances to tolerance block, zone A3:

.x +/- .1
.xx +/- .02
.xxx +/- .005
Angles +/- 1 Degree

14. THIS SECTION FOR GOVERNMENT USE ONLY

a. (X ONE)		(1) Existing document supplemented by this NOR may be used in manufacture.
		(2) Revised document must be received before manufacturer may incorporate this change.
		(3) Cartridge of master document shall make above revision and furnish revised document.

b. ACTIVITY AUTHORIZED TO APPROVE CHANGE FOR GOVERNMENT	c. TYPED NAME (First, Middle initial, last)
TACOM-ARDEC, AMSTA-AR-CCL-F	

Ronald E. Elbe Chief, CCAC Prod & Field Spt Team	e. SIGNATURE: [signature]	f. DATE SIGNED (YYMMDD): 20010126
1.1.a. ACTIVITY ACCOMPLISHING REVISION	b. REVISION COMPLETED (Signature)	c. DATE SIGNED (YYMMDD)

DD FORM 1695, APR 92

STMT A: UNLIMITED

L 0 S 3 0. 5 7

COMMENTS ON WAIVER, DEVIATION OR ENGINEERING CHANGE REQUEST

1. DATE OF REQUEST: 11 Dec 00

2. PRIME CONTRACTOR (Name, city and state): Capco, Inc. 1328 Winters Ave Grand Junction, Co 81501

3. PLANT (Name, city & state, if different than Item 2):

4. TYPE OF REQUEST: [ ] WAIVER [ ] DEVIATION [X] ECP

5. CLASS OF DEP OR TYPE OF NONCONFORMANCE: [ ] I [ ] II [X] NON CLASSIFIED

6. NUMBER OF DEP WAIVER: 01406004

7. CONTRACT NUMBER: DAAE20-99-D-0140 order 0002

ROUTINGS, ACTIONS, RECOMMENDATION, COMMENTS AND/OR REMARKS

8. QUALITY ASSURANCE REPRESENTATIVE
A. [X] APPROVED AND ACCEPTED BY CONTRACTOR
B. [ ] SENT TO CLASSIFICATION
C. [ ] RECLASSIFICATION CLASSIFICATION
D. [X] APPROVED RECOMMENDED
E. [ ] APPROVED NOT RECOMMENDED

TYPED NAME AND TITLE OF INSPECTOR: David P. Peterson Quality Assurance Specialist
SIGNATURE:
OFFICE SYMBOL: DCMA-GJOC
PHONE NO.: 970-245-0407
DATE SIGNED: 20 Dec 00

9. [ ] ROUTED TO QA STAFF OR SUPERVISOR
A. [ ] SENT TO CLASSIFICATION
B. [ ] RECLASSIFICATION IN CLASSIFICATION
C. [ ] APPROVED RECOMMENDED
D. [ ] APPROVED NOT RECOMMENDED

TYPED NAME AND TITLE OF REVIEWER:
SIGNATURE:
OFFICE SYMBOL:
PHONE NO.:
DATE SIGNED:

10. [ ] ROUTED TO CAO PRODUCTION OFFICE
A. [ ] APPROVED RECOMMENDED
B. [ ] DISAPPROVED RECOMMENDED
OFFICE SYMBOL: PHONE NO.: DATE SIGNED:
TYPED NAME AND TITLE OF REVIEWER: SIGNATURE:

11. [ ] ROUTED TO ACO
A. [ ] APPROVED RECOMMENDED
B. [ ] DISAPPROVED RECOMMENDED
OFFICE SYMBOL: PHONE NO.: DATE SIGNED:
TYPED NAME AND TITLE OF REVIEWER: SIGNATURE:

12. [ ] ROUTED TO OTHER (Specify).
A. [ ] APPROVED RECOMMENDED
B. [ ] DISAPPROVED RECOMMENDED
OFFICE SYMBOL: PHONE NO.: DATE SIGNED:
TYPED NAME AND TITLE OF REVIEWER: SIGNATURE:

13. [ ] ROUTED TO PCO
OFFICE SYMBOL: PHONE NO.:

14. COMMENTS AND/OR REMARKS (Attach separately on basis of Item 13, be sure to identify it with related item. Continue on reverse side if necessary)

Block 8: I reviewed this ECP with Mr. Ed Rephshire, Capco Technical Engineer for the MK93 program

15. CONCURRENCE DECISION OR ACTION
A. [ ] APPROVED
B. [ ] DISAPPROVED

16. MODIFICATION OF CONTRACT IS
A. [ ] REQUIRED (Modification Number _____)
B. [ ] NOT REQUIRED

17. TYPED NAME AND TITLE (Approving or disapproving authority)
SIGNATURE:
DATE:

DISTRIBUTION OF COPIES: [ ] CONTRACTOR [ ] ACO [ ] QAR [ ] OTHER (Specify)

DD FORM 1998, JUL 75 (EG) Replaces DLA Form 573 which is obsolete. PerFORM (DLA)

L0S3057_19200_CP_0004_0001_U_N
April 18, 2001 10:11 AM

LOS3057_19200_CP_-_0005_0001_U_N
April 18, 2001 10:11 AM

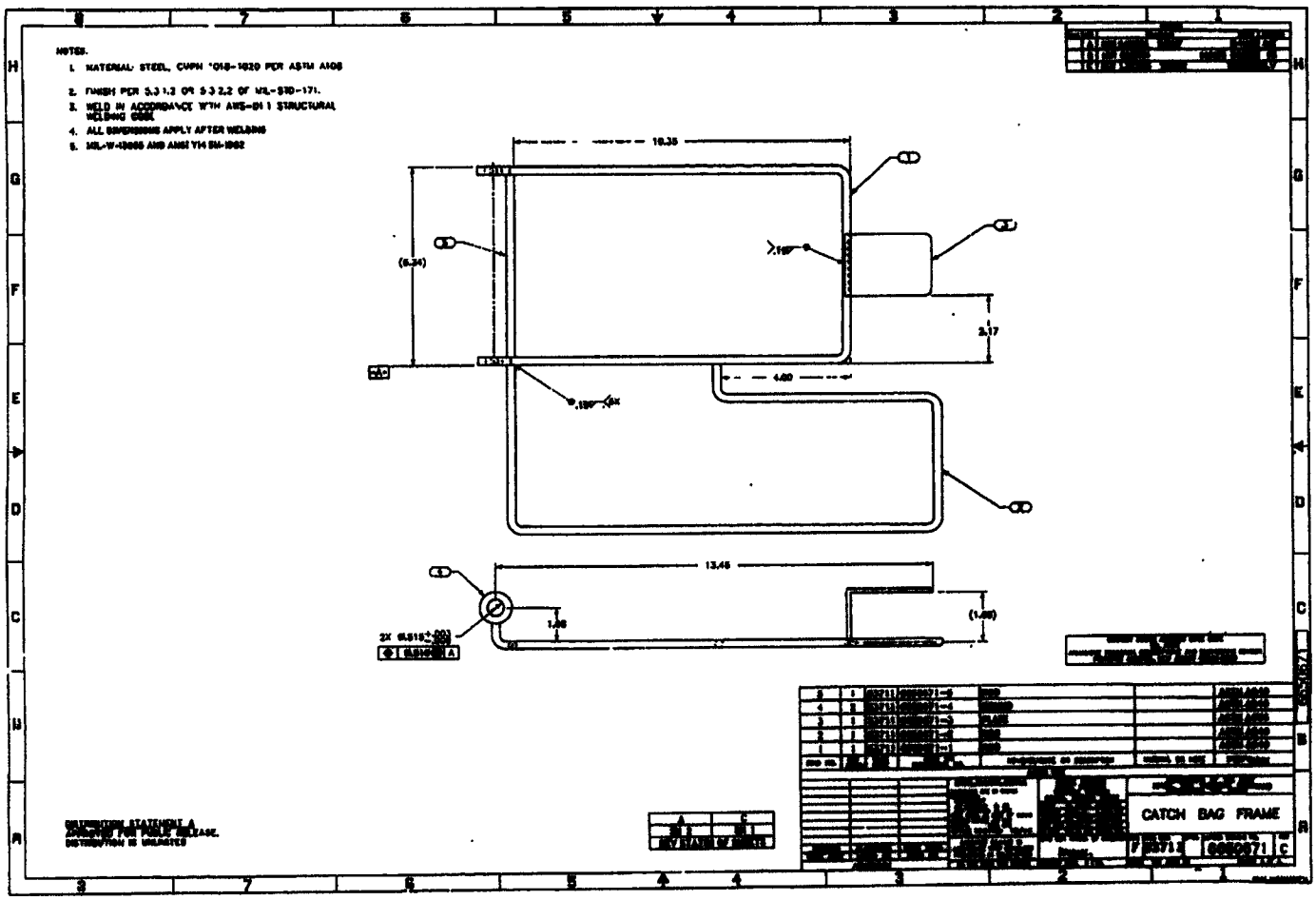

LOS30.57

NOTES.-

1. APPLICABLE STANDARDS/SPECIFICATIONS:
   A. ANSI Y14.5M-1982
   B. MIL-W-13855
   C. MIL-STD-100E
2. MATERIAL: STEEL, CMPSN 8620, 8617, OR 4118 PER ASTM A322.
3. MACHINING CENTER OPTIONAL.

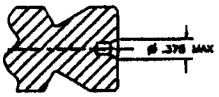

ALTN CONSTRUCTION

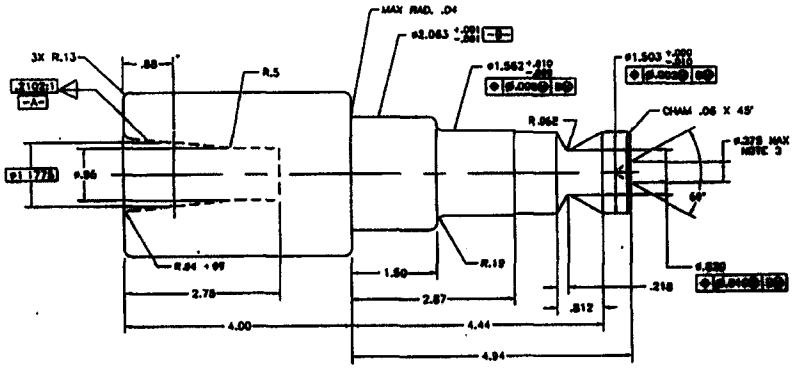

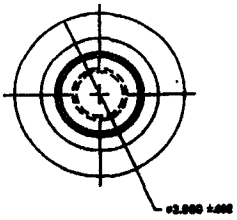

PART NO. 12012063

BODY, PINTLE ADAPTER

D 19200 12012063

L0S3057

CONFIGURATION CONTROL BOARD DIRECTIVE

1. PAN L0S3057

2. CONFIGURATION ITEM / PART NUMBER: MK93 MOD I MOUNT / 6650723

3. CCB NAME / LEVEL / DATE: SMALL ARMS WEAPONS / II / 23 JAN 01

4. TYPE OF ACTION: [X] ECP [ ] VECP [ ] RFW [ ] VEP [ ] RFD [ ] OTHER:

5. ACTION ORIGINATOR NAME: CAPCO, INC.

6. ACTION ORIGINATOR NUMBER AND DATE: 0140E004 11 DEC 00

7. COORDINATION WITH COMBAT DEVELOPER
Determine by completing a Combat Developer Coordination Checksheet for all Class I ECPs for type classified items.

INFORMAL SCHOOL CODES FOR NOTIFICATION: [X] NO [ ] 01 [ ] 02 [ ] 03 [X] 04 [ ] 05 [ ] 06 [ ] 07 [ ] 08 [ ] 09 [ ] OTHER _____

FORMAL: [ ] YES [ ] NA

8. SYNOPSIS OF CHANGE

REPLACE ERRONEOUS STAINLESS STEEL SPECIFICATION IN PART LIST AND APPLY GENERAL TOLERANCES.

9. MODIFICATION TO SUBMITTED ACTION: [X] NONE [ ] REVISION [ ] CORRECTION [ ] SEE PAGE ___

10. POSITION ON RECOMMENDATION TO CONFIGURATION MANAGER

OFFICE SYMBOL	SIGNATURE	CONCUR YES	CONCUR NO	OFFICE SYMBOL	SIGNATURE	CONCUR YES	CONCUR NO
AMSTA-LC-CSIH	[signature]	X					
AMSTA-AR-QAWA	J. FARMER FONCON	X					
AMSTA-LC-CSC-A	S. PITZER EMAIL	X					
MCLNO-LMC	[signature]	X					
AFLNO	W. FENDER EMAIL	X					
NVLNO	[signature] Gonzalez	X					
AMSTA-AR-CCL-FS	[signature] Vernon	X					
AMSTA-AR-CCL-A	D. SMITH FONCON	X					

11. REMARKS

SEE PAGE 2

12a. ECP CLASSIFICATION: [X] I [ ] II

12b. RFW / RFD DESIGNATION: [ ] CRITICAL [ ] MINOR [ ] MAJOR

12c. RECURRING RFD / RFW? [ ] NO [ ] YES - ECP REQUIRED [ ] YES [ ] NO

12d. ECP RESULTS FROM RFW / RFD: [ ] YES [X] NO

12e. COST IMPACT: [X] NONE [ ] INCREASE $ _____ [ ] DECREASE $ _____

13a. CHAIRMAN RECOMMENDATION: [X] APPROVE [ ] APPROVE AS MODIFIED [ ] DISAPPROVE [ ] OTHER

13b. CCB CHAIRMAN: Gerald A Strall RE
for Loren Brunton, AMSTA-AR-CCL-FS
PRINTED / TYPED NAME, OFFICE SYMBOL AND SIGNATURE

13c. DATE: 26 Jan 2001

13d. TELEPHONE: x28160

14a. DECISION ON ACTION: [X] APPROVE [ ] APPROVE AS MODIFIED [ ] DISAPPROVE [ ] OTHER

14b. CONFIGURATION MANAGER: [signature]
Chief, CCAC, Production & Field Support Team
PRINTED / TYPED NAME, OFFICE SYMBOL AND SIGNATURE

14c. DATE: 26 Jan 2001

14d. TELEPHONE: x25475

AMCCOM Form 390-R-E, 1 Feb 92

Replaces AMCCOM Form 390-R-R, 1 Jun 91 and SMCAR-BA Forms 1517 and 1518, which may not be used.

CONFIGURATION CONTROL BOARD DIRECTIVE	1. PAN L0S3057

11. REMARKS, CONTINUED:

a. CCB BOARD RECOMMENDATION W/RATIONALE: RECOMMEND APPROVAL. THIS CHANGE REPLACES MATERIAL SPECIFICATIONS IN THE PART LISTING THAT IS IN CONFLICT WITH THE MATERIAL NOTE, ADDS STANDARD WELD SPECIFICATIONS, AND MISSING GENERAL TOLERANCES.

b. MODIFICATIONS/CORRECTIONS: N/A

c. QAP CHANGES NEEDED/INCLUDED: N/A

d. TM AFFECTED: N/A

e. OTHER SYSTEMS AFFECTED: N/A

f. CONTRACTS AFFECTED: DAAE20-99-D-0140

g. IMPLEMENTATION INSTRUCTIONS: AMSTA-LC-CSC-A WILL INCORPORATE THIS CHANGE IN THE ABOVE CONTRACT AT NO COST TO THE GOVERNMENT.

FOR ECPS:
- ☐ OPTIONAL
- ☒ MANDATORY
  - ☒ WITHOUT/ ☐ WITH OBSOLESCENCE
  - ☒ NO COST ☐ COST NTE $_____

h. READINESS IMPACT: N/A

i. EOD IMPACT: N/A

j. VE SAVINGS:

k. RATIONALE/CALCULATIONS FOR COST CONCESSION (RFW) OR CONTRACTUAL COST ADJUSTMENT (RFD, ECP, VECP):

TOTAL $ N/A – %

l. OZONE DEPLETING SUBSTANCE ELIMINATED: YES ☐ NO ☒

L0S3057

AMSTA-AR-CCL-FS (70-37a) 26 Jan 01

MEMORANDUM FOR AMSTA-LC-CSC-A

SUBJECT: Transmittal of Completed Engineering Action Number L0S3057
and Implementation Data

1. The ARDEC Configuration Control Board Directive (CCBD), dated 23 Jan 01 and associated change documentation (encl), subject: MK 93 MOD I Mount / 6650723 are provided for expeditious action. If tasked to execute an action and implementation cannot be accomplished on or before the agreed to CCB date, the POC identified in paragraph 2 should be notified of the slippage by return endorsement with explanation/reason for the slippage, and a new planned implementation date.

2. The POC is Mr. Vernon, AMSTA-AR-CCL-FS, ext 28164, email vernonp.

Encl

LOREN BRUNTON
Chief, Small Caliber Systems Team

CF:
AMSTA-AR-QAD

L0S3057_19200_CP_0009_0001_U_N
April 18, 2001 10:12 AM