ENGINEERING CHANGE PROPOSAL (ECP), PAGE 1

1. DATE (YYMMDD): 2001/05/14

Form Approved OMB No. 0704-0188

Public reporting burden for this collection of information is estimated to average 2 hours per response, including the time for reviewing instructions, searching existing data sources, gathering and maintaining the data needed, and completing and reviewing the collection of information. Send comments regarding this burden estimate or any other aspect of this collection of information, including suggestions for reducing this burden, to Department of Defense, Washington Headquarters Services, Directorate for Information Operations and Reports, 1215 Jefferson Davis Highway, Suite 1204, Arlington, VA 22202-4302, and to the Office of Management and Budget, Paperwork Reduction Project (0704-0188) Washington, DC 20503.

PLEASE DO NOT RETURN YOUR COMPLETED FORM TO EITHER OF THESE ADDRESSES. RETURN COMPLETED FORM TO THE GOVERNMENT ISSUING CONTRACTING OFFICER FOR THE CONTRACT/PROCURING ACTIVITY NUMBER LISTED IN ITEM 2 OF THIS FORM.

2. PROCURING ACTIVITY NO.: R1R3006

3. DODAAC:

4. ORIGINATOR

a. TYPED NAME (First, Middle Initial, Last): DONALD E. DAVIS

b. ADDRESS (Street, City, State, Zip Code): COMMANDER, U.S. ARMY AVIATION AND MISSILE COMMAND, ATTN: AMSAM-RD-PS-SA, REDSTONE ARSONEL, AL 35898

5. CLASS OF ECP: I

6. JUST. CODE: D

7. PRIORITY: R

8. ECP DESIGNATION

a. MODEL/TYPE: M260 & M261

b. CAGE CODE: 18876

c. SYSTEM DESIGNATION: M260 & M261 ROCKET LAUNCHER

d. ECP NO.: MI-M7565

e. TYPE: F

f. REV:

9. BASELINE AFFECTED: [ ] FUNCTIONAL [X] PRODUCT [ ] ALLOCATED

10. OTHER SYS./CONFIG. ITEMS AFFECTED: [ ] YES [X] NO

11. SPECIFICATIONS AFFECTED

	CAGE Code	Specification/Document No.	Rev.	SCN
a. SYSTEM				
b. DEVELOPMENT				
c. PRODUCT				

12. DRAWINGS AFFECTED

CAGE Code	Number	Rev.	NOR
	SEE PAGE 1A		

13. TITLE OF CHANGE: ELIMINATION OF UNNESSECCARY HOLE, CONNECTOR MODIFICATION AND COMBINATION OF TWO PARTS

14. CONTRACT NO. LINE ITEM

15. PROCURING CONTRACTING OFFICER

a. NAME (First, Middle Initial, Last): ADELAIDE TKATCH

b. CODE

c. TELEPHONE NO.

16. CONFIGURATION ITEM NOMENCLATURE: M260 7-TUBE AND M261 19-TUBE 2.75 INCH AIRCRAFT ROCKET LAUNCHER

17. IN PRODUCTION: [ ] YES [X] NO

18. ALL LOWER LEVEL ITEMS AFFECTED

a. NOMENCLATURE: SEE PAGE 1A

b. PART NO.: SEE PAGE 1A

c. NSN: N/A

19. DESCRIPTION OF CHANGE: SEE PAGE 1A

20. NEED FOR CHANGE: SEE PAGE 1A

21. PRODUCTION EFFECTIVITY BY SERIAL NUMBER: N/A

22. EFFECT ON PRODUCTION DELIVERY SCHEDULE: N/A

23. RETROFIT

a. RECOMMENDED ITEM EFFECTIVITY: N/A

b. SHIP / VEHICLE CLASS AFFECTED: N/A

c. ESTIMATED KIT DELIVERY SCHEDULE: N/A

d. LOCATIONS OR SHIP / VEHICLE NUMBERS AFFECTED: N/A

24. ESTIMATED COSTS / SAVINGS UNDER CONTRACT: SEE PAGE 1A

25. ESTIMATED NET TOTAL COSTS / SAVINGS: SEE PAGE 1A

26. SUBMITTING ACTIVITY

a. AUTHORIZED SIGNATURE

b. TITLE: PRINCIPLE SUPPORT ENGINEER

27. APPROVAL / DISAPPROVAL

a. CLASS I: [X] APPROVAL RECOMMENDED [ ] DISAPPROVAL RECOMMENDED

b. CLASS II: [ ] APPROVED [ ] DISAPPROVED

c. CLASS II: [ ] CONCUR IN CLASSIFICATION OF CHANGE [ ] DO NOT CONCUR IN CLASSIFICATION OF CHANGE

d. GOVERNMENT ACTIVITY

e. SIGNATURE

f. DATE SIGNED (YYMMDD)

g. APPROVAL: [X] APPROVED [ ] DISAPPROVED

h. GOVERNMENT ACTIVITY: Ronald E. Elbe, Configuration Manager, Chief, CCAC Production & Field Support Team, AMSTA-AR-CCL-F

i. SIGNATURE: Ronald E Elbe

j. DATE SIGNED (YYMMDD): 20010531

DD Form 1692, APR 92 — Previous editions are obsolete — USAPPC V1.00

DISTRIBUTION STATEMENT A. APPROVED FOR PUBLIC RELEASE. DISTRIBUTION IS UNLIMITED.

ATTACHMENT 004

BLOCK NO.	BLOCK TITLE SUPPLEMENTAL INFORMATION
12 & 18	DRAWINGS/ ALL LOWER LEVEL ITEMS AFFECTED:

Cage Code	Nomenclature	Part No.	NOR
55717	LAUNCHER, ROCKET, AIRCRAFT: 2.75 INCH, 7-TUBE, M260	13048750	1/18
55717	LAUNCHER TUBE ASSEMBLY	13048770	2/18
55717	STRONGBACK, LAUNCHER	13048775	3/18
55717	SKIN, LAUNCHER	13048777	4/18
55717	LAUNCHER SKIN AND SUPPORT	13048778	5/18
55717	STRONGBACK SUPPORT	13048780	6/18
55717	DETENT ASSEMBLY	13048880	7/18
55717	PARTS LIST DETENT ASSEMBLY	PL13048880	8/18
55717	HOUSING, DETENT	13048801	9/18
55717	SPRING, CONTACT	13048812	10/18
18876	SKIN, LAUNCHER	13048824	11/18
18876	CONNECTOR, COAXIAL-FUZE	13048827	12/18
55717	CONNECTOR, COAXIAL-FUZE	13048830	13/18
18876	LAUNCHER TUBE ASSEMBLY	13048840	14/18
18876	STRONGBACK, SUPPORT	13048848	15/18
18876	LAUNCHER SKIN AND SUPPORT	13048849	16/18
55717	LAUNCHER, ROCKET, AIRCRAFT: 2.75 INCH, 19-TUBE, M261	13048850	17/18
55717	STRONGBACK, LAUNCHER	13048875	18/18

19 DESCRIPTION OF CHANGE:

1. The hole in the top of the launcher for a hook to attach to the strongback is eliminated. This hole in the strongback and the hole in the launcher skin are eliminated. All subsequent drawings showing this hole are modified to remove it.
2. The contact plate in the detent assembly is removed and the contact spring is modified to take the place of the contact plate. The detent housing is modified to accept the new contact spring. The assembly drawing and parts list are modified to reflect this change.
3. The fuze connectors on front face of the launcher are modified to make a better fit with the mating connector coming off of each rocket.

20 NEED FOR CHANGE:

1. The army no longer uses the loading hook that the hole in the strongback was designed to fit with. The hole is eliminated to save the cost of machining it.
2. Due to the expansion and contraction rates differing between the two materials of the contact plate and the contact spring, the rivet joining the two was working loose. This broke the electrical connection to the contact spring from the firing harness. The two pieces are combined into a single piece of the same material to eliminate this problem. This will increase the number of firings the launcher is capable of before expiring by improving durability to match the specified requirements.
3. Due to tolerance issues, some fuze connectors failed to achieve proper contact between pins. The connector is modified and the important dimensions are now controlled such that this problem will be eliminated and ensure reliability matches the specified requirements.

24 & 25 ESTIMATED COST/SAVINGS UNDER CONTRACT-ESTIMATED NET TOTAL COST/SAVINGS:

1. The elimination of the hole will save $5.25 per launcher.
2. The changes to the detent and the fuze connectors will be incorporated at no increase to the current contract price.
3. The net total saving is $5.25 per launcher.

NOTICE OF REVISION (NOR)
THIS REVISION DESCRIBED BELOW HAS BEEN AUTHORIZED FOR THE DOCUMENT LISTED

1. DATE (YYYYMMDD) **2001/05/14**

Form Approved
OMB No. 0704-0188

The public reporting burden for this collection of information is estimated to average 2 hours per response, including the time for reviewing instructions, searching existing data sources, gathering and maintaining the data needed, and completing and reviewing the collection of information. Send comments regarding this burden estimate or any other aspect of this collection of information, including suggestions for reducing the burden, to Department of Defense, Washington Headquarters Services, Directorate for Information Operations and Reports (0704-0188), 1215 Jefferson Davis Highway, Suite 1204, Arlington, VA 22202-4302. Respondents should be aware that notwithstanding any other provision of law, no person shall be subject to any penalty for failing to comply with a collection of information if it does not display a currently valid OMB control number.
PLEASE DO NOT RETURN YOUR COMPLETED FORM TO THIS ADDRESS. RETURN COMPLETED FORM TO THE GOVERNMENT ISSUING CONTRACTING OFFICER FOR THE CONTRACT/PROCURING ACTIVITY NUMBER LISTED IN ITEM 2 OF THIS FORM.

2. PROCURING ACTIVITY NO. R1R3006

3. DODAAC

4. ORIGINATOR
a. TYPED NAME *(First, Middle Initial, Last)*
Donald E. Davis

b. ADDRESS *(Street, City, State, Zip Code)*
Commander
U.S. ARMY AVIATION AND MISSILE COMMAND
ATTN: AMSAM-RD-PS-SA
REDSTONE ARSENEL, AL 35898

5. CAGE CODE 18876

6. NOR NO. 1/18R1R3006.1

7. CAGE CODE 55717

8. DOCUMENT NO. 13048750

9. TITLE OF DOCUMENT
LAUNCHER, ROCKET, AIRCRAFT: 2.75 INCH, 7-TUBE, M260

10. REVISION LETTER
a. CURRENT: J
b. NEW: K

11. ECP NO. MI-M7565

12. CONFIGURATION ITEM *(OR SYSTEM)* TO WHICH ECP APPLIES
M260 7-TUBE 2.75 INCH AIRCRAFT ROCKET LAUNCHER

13. DESCRIPTION OF REVISION
THE DRAWING HAS BEEN REVISED AND REDRAWN. THE CLOUDS DEPICT THE AREAS OF CHANGE.

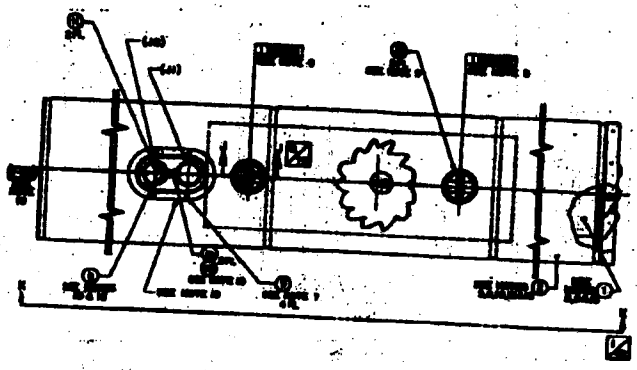

WAS

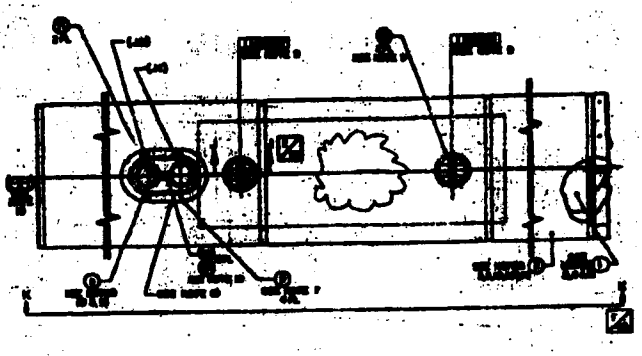

IS

14. THIS SECTION FOR GOVERNMENT USE ONLY

a. *(X one)*
- [ ] (1) Existing document supplemented by this NOR may be used in manufacture.
- [ ] (2) Revised document must be received before manufacturer may incorporate this change.
- [ ] (3) Custodian of master document shall make above revision and furnish revised document.

b. ACTIVITY AUTHORIZED TO APPROVE CHANGE FOR GOVERNMENT

c. TYPED NAME *(First, Middle Initial, Last)*

d. TITLE
Ronald E. Elba, Configuration Manager
Chief, CCAC Production & Field Support Team
AMSTA-AR-CCL-F

e. SIGNATURE
Ronald E. Elba

f. DATE SIGNED (YYYYMMDD)
2001/05/31

15.a. ACTIVITY ACCOMPLISHING REVISION

b. REVISION COMPLETED *(SIGNATURE)*

c. DATE SIGNED (YYYYMMDD)

DISTRIBUTION STATEMENT A. APPROVED FOR PUBLIC RELEASE. DISTRIBUTION IS UNLIMITED.

NOTICE OF REVISION (NOR) THIS REVISION DESCRIBED BELOW HAS BEEN AUTHORIZED FOR THE DOCUMENT LISTED	1. DATE (YYYYMMDD) 2001/05/14	Form Approved OMB No. 0704-0188

The public reporting burden for this collection of information is estimated to average 2 hours per response, including the time for reviewing instructions, searching existing data sources, gathering and maintaining the data needed, and completing and reviewing the collection of information. Send comments regarding this burden estimate or any other aspect of this collection of information, including suggestions for reducing the burden, to Department of Defense, Washington Headquarters Services, Directorate for Information Operations and Reports (0704-0188), 1215 Jefferson Davis Highway, Suite 1204, Arlington, VA 22202-4302. Respondents should be aware that notwithstanding any other provision of law, no person shall be subject to any penalty for failing to comply with a collection of information if it does not display a currently valid OMB control number.
PLEASE DO NOT RETURN YOUR COMPLETED FORM TO THIS ADDRESS. RETURN COMPLETED FORM TO THE GOVERNMENT ISSUING CONTRACTING OFFICER FOR THE CONTRACT/PROCURING ACTIVITY NUMBER LISTED IN ITEM 2 OF THIS FORM.

2. PROCURING ACTIVITY NO. R1R3006			
3. DODAAC			
4. ORIGINATOR a. TYPED NAME (First, Middle Initial, Last) Donald E. Davis	b. ADDRESS (Street, City, State, Zip Code) Commander U.S. ARMY AVIATION AND MISSILE COMMAND ATTN: AMSAM-RD-PS-SA REDSTONE ARSENAL, AL 35898	5. CAGE CODE 18876 7. CAGE CODE 55717	6. NOR NO. 2/18 R1R3006.2 8. DOCUMENT NO. 13048870
9. TITLE OF DOCUMENT LAUNCHER TUBE ASSEMBLY	10. REVISION LETTER a. CURRENT: E b. NEW: F		11. ECP NO. MI-M7565

12. CONFIGURATION ITEM (OR SYSTEM) TO WHICH ECP APPLIES
M260 7-TUBE 2.75 INCH AIRCRAFT ROCKET LAUNCHER

13. DESCRIPTION OF REVISION
THE DRAWING HAS BEEN REVISED AND REDRAWN. THE CLOUDS DEPICT THE AREAS OF CHANGE.

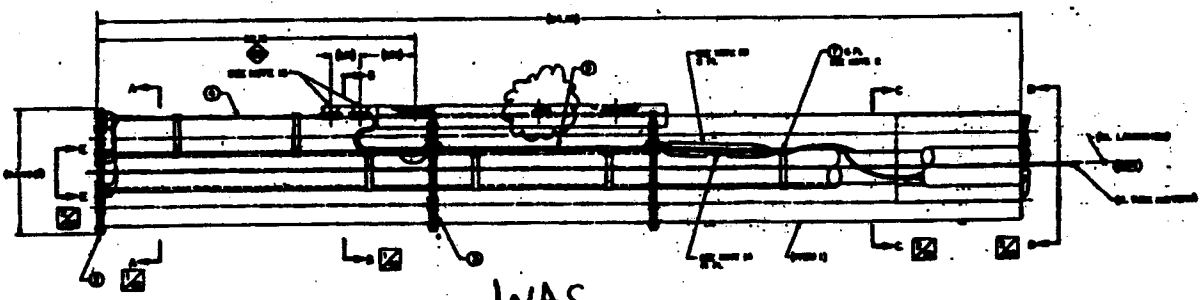

WAS

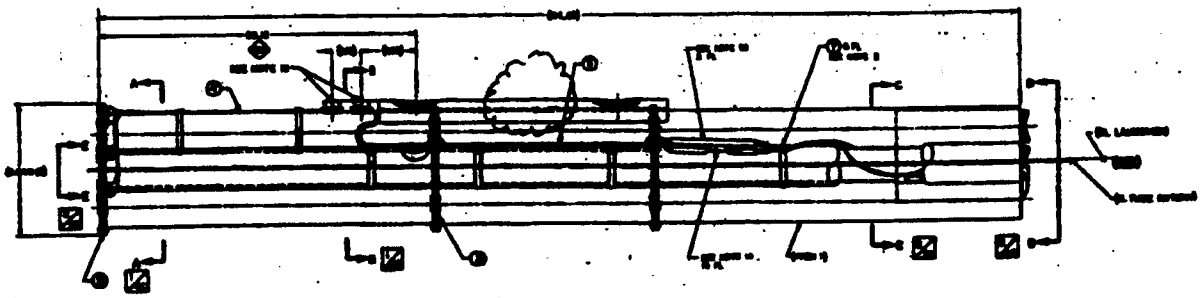

IS

14. THIS SECTION FOR GOVERNMENT USE ONLY

a. (X one)		
		(1) Existing document supplemented by this NOR may be used in manufacture.
		(2) Revised document must be received before manufacturer may incorporate this change.
		(3) Custodian of master document shall make above revision and furnish revised document.

b. ACTIVITY AUTHORIZED TO APPROVE CHANGE FOR GOVERNMENT	c. TYPED NAME (First, Middle Initial, Last)	
d. TITLE Ronald E. Elbe, Configuration Manager Chief, CCAC Production & Field Support Team AMSTA-AR-CCL-F	e. SIGNATURE Ronald E Elbe	f. DATE SIGNED (YYYYMMDD) 20010531
15.a. ACTIVITY ACCOMPLISHING REVISION	b. REVISION COMPLETED (SIGNATURE)	c. DATE SIGNED (YYYYMMDD)

DISTRIBUTION STATEMENT A. APPROVED FOR PUBLIC RELEASE. DISTRIBUTION IS UNLIMITED.

NOTICE OF REVISION (NOR) THIS REVISION DESCRIBED BELOW HAS BEEN AUTHORIZED FOR THE DOCUMENT LISTED	1. DATE (YYYYMMDD) 2001/05/14	Form Approved OMB No. 0704-0188
The public reporting burden for this collection of information is estimated to average 2 hours per response, including the time for reviewing instructions, searching existing data sources, gathering and maintaining the data needed, and completing and reviewing the collection of information. Send comments regarding this burden estimate or any other aspect of this collection of information, including suggestions for reducing the burden, to Department of Defense, Washington Headquarters Services, Directorate for Information Operations and Reports (0704-0188), 1215 Jefferson Davis Highway, Suite 1204, Arlington, VA 22202-4302. Respondents should be aware that notwithstanding any other provision of law, no person shall be subject to any penalty for failing to comply with a collection of information if it does not display a currently valid OMB control number. PLEASE DO NOT RETURN YOUR COMPLETED FORM TO THIS ADDRESS. RETURN COMPLETED FORM TO THE GOVERNMENT ISSUING CONTRACTING OFFICER FOR THE CONTRACT/PROCURING ACTIVITY NUMBER LISTED IN ITEM 2 OF THIS FORM.	2. PROCURING ACTIVITY NO. RIR3006 3. DODAAC	

4. ORIGINATOR a. TYPED NAME (First, Middle Initial, Last) Donald E. Davis	b. ADDRESS (Street, City, State, Zip Code) Commander U.S. ARMY AVIATION AND MISSILE COMMAND ATTN: AMSAM-RD-PS-SA REDSTONE ARSENAL, AL 35898	5. CAGE CODE 18876 7. CAGE CODE 55717	6. NOR NO. 3/18R1R3006.3 8. DOCUMENT NO. 13048775

9. TITLE OF DOCUMENT	10. REVISION LETTER		11. ECP NO.
	a. CURRENT	b. NEW	
STRONGBACK, LAUNCHER	C	D	MI-M7565

12. CONFIGURATION ITEM (OR SYSTEM) TO WHICH ECP APPLIES

M260 7-TUBE 2.75 INCH AIRCRAFT ROCKET LAUNCHER

13. DESCRIPTION OF REVISION

THE DRAWING HAS BEEN REVISED AND REDRAWN ON SHEETS 2 THRU 3. THE CLOUDS DEPICT THE AREAS OF CHANGE.

14. THIS SECTION FOR GOVERNMENT USE ONLY

a. (X one)

- [ ] (1) Existing document supplemented by this NOR may be used in manufacture.
- [ ] (2) Revised document must be received before manufacturer may incorporate this change.
- [ ] (3) Custodian of master document shall make above revision and furnish revised document.

b. ACTIVITY AUTHORIZED TO APPROVE CHANGE FOR GOVERNMENT	c. TYPED NAME (First, Middle Initial, Last)	
d. TITLE Ronald E. Elbe, Configuration Manager Chief, CCAC Production & Field Support Team AMSTA-AR-CCL-F	e. SIGNATURE Ronald E Elbe	f. DATE SIGNED (YYYYMMDD) 2001/05/31
15.a. ACTIVITY ACCOMPLISHING REVISION	b. REVISION COMPLETED (SIGNATURE)	c. DATE SIGNED (YYYYMMDD)

DD FORM 1695, AUG 96 (EG) PREVIOUS EDITION MAY BE USE

DISTRIBUTION STATEMENT A. APPROVED FOR PUBLIC RELEASE. DISTRIBUTION IS UNLIMITED.

NOTES - UNLESS OTHERWISE SPECIFIED

1. BREAK EDGES
2. SURFACE ROUGHNESS 125
3. CHROMATE CONVERSION COAT PER MIL C 5541, CL1A
4. DELETED
5. ~~[illegible]~~
6. INTERPRET DIMENSIONS PER ANSI-Y14.5-1973
7. 100% CLEANUP NOT REQD
8. ALTERNATE MATERIAL: AL ALLOY PER QQ-A-250/11, COMP 6061, TEM T6
9. QUALITY ASSURANCE PROVISIONS:
   A. QUALITY CONFORMANCE INSPECTION SHALL BE IN ACCORDANCE WITH TABLE I. SAMPLING AND LOT FORMATION SHALL BE PER MIL-STD-105, INSPECTION LEVEL II
   B. ALL CHARACTERISTICS NOT SHOWN IN TABLE I ARE CLASSIFIED MINOR AND SHALL BE INSPECTED UNDER THE CONTRACTER'S QUALITY INSPECTION SYSTEM
10. SME = STANDARD MEASURING EQUIPMENT
11. ~~[illegible]~~
12. ◇ = MAJOR CHARACTERISTIC
13. TOOLING HOLES OPTIONAL

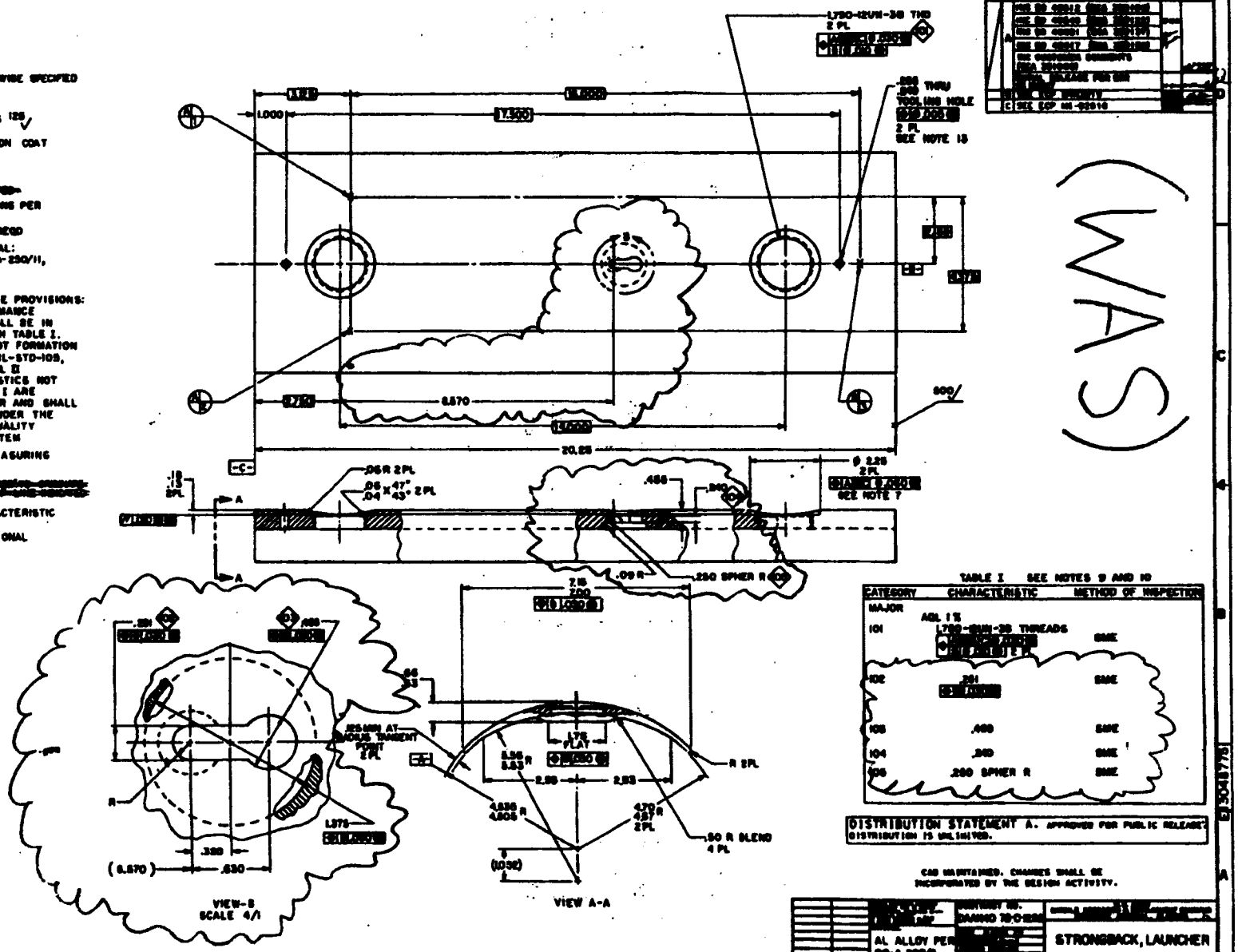

TABLE I SEE NOTES 9 AND 10

CATEGORY	CHARACTERISTIC	METHOD OF INSPECTION
MAJOR	AQL 1%	
101	1.750-12UN-3B THREADS	SME
102	.201	SME
103	.400	SME
104	.240	SME
105	.250 SPHER R	SME

DISTRIBUTION STATEMENT A. APPROVED FOR PUBLIC RELEASE; DISTRIBUTION IS UNLIMITED.

CAD MAINTAINED. CHANGES SHALL BE INCORPORATED BY THE DESIGN ACTIVITY.

AL ALLOY PER QQ-A-200/8 COMP 6061 TEM T6510 OR T651 SEE NOTE 8	DAAHO 10-0-[illegible]	STRONGBACK, LAUNCHER
	E 55717	13048775

ECP NO. MI-M7565 NOR 3/18 SHEET 2 OF 3

ECP NO. MI-M7565 NOR 3/18 SHEET 3 OF 3.

(IS)

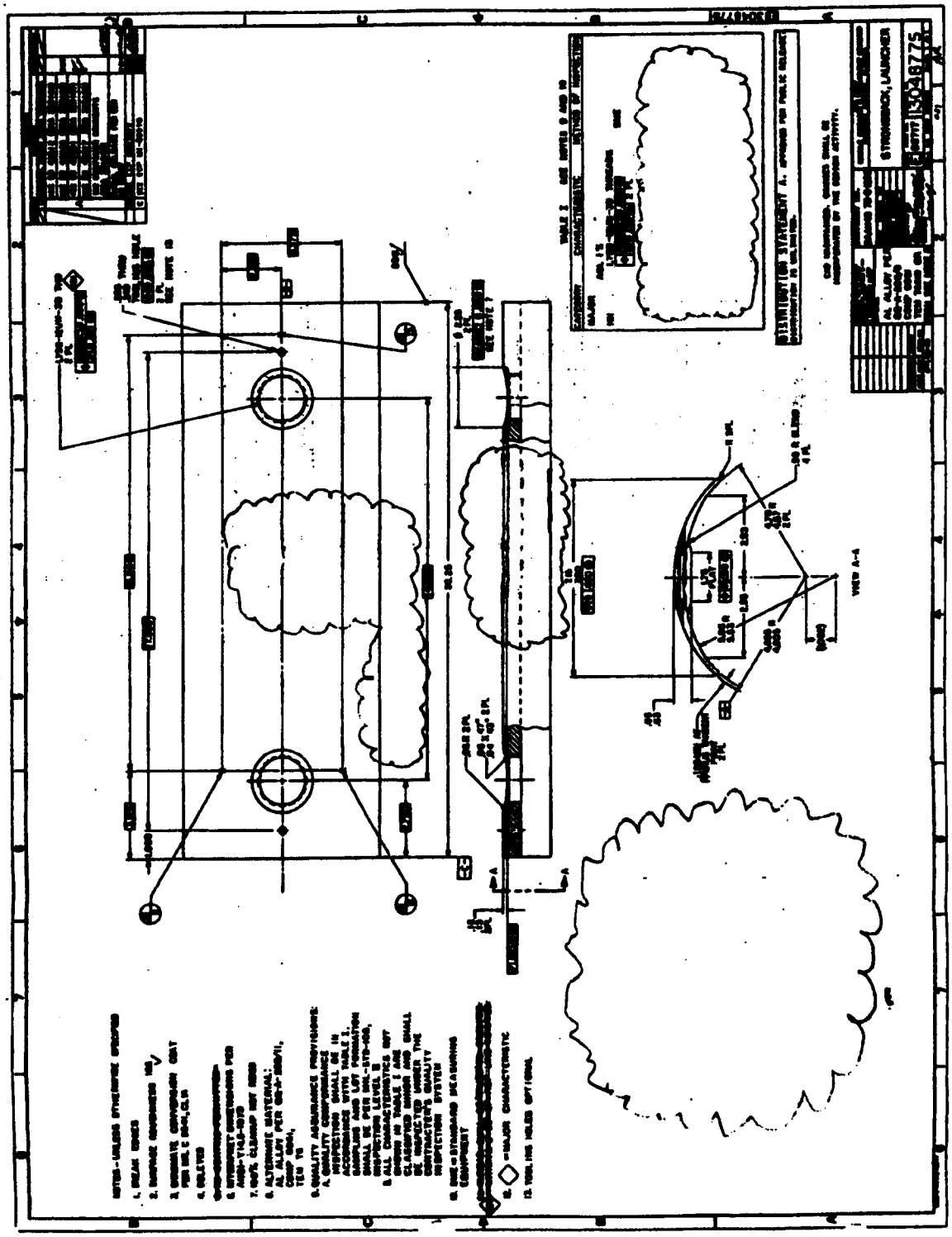

NOTICE OF REVISION (NOR) THIS REVISION DESCRIBED BELOW HAS BEEN AUTHORIZED FOR THE DOCUMENT LISTED	1. DATE (YYYYMMDD) 2001/05/14	Form Approved OMB No. 0704-0188
The public reporting burden for this collection of information is estimated to average 2 hours per response, including the time for reviewing instructions, searching existing data sources, gathering and maintaining the data needed, and completing and reviewing the collection of information. Send comments regarding this burden estimate or any other aspect of this collection of information, including suggestions for reducing the burden, to Department of Defense, Washington Headquarters Services, Directorate for Information Operations and Reports (0704-0188), 1215 Jefferson Davis Highway, Suite 1204, Arlington, VA 22202-4302. Respondents should be aware that notwithstanding any other provision of law, no person shall be subject to any penalty for failing to comply with a collection of information if it does not display a currently valid OMB control number. PLEASE DO NOT RETURN YOUR COMPLETED FORM TO THIS ADDRESS. RETURN COMPLETED FORM TO THE GOVERNMENT ISSUING CONTRACTING OFFICER FOR THE CONTRACT/PROCURING ACTIVITY NUMBER LISTED IN ITEM 2 OF THIS FORM.		2. PROCURING ACTIVITY NO. R1R3006 3. DODAAC

4. ORIGINATOR a. TYPED NAME (First, Middle Initial, Last) Donald E. Davis	b. ADDRESS (Street, City, State, Zip Code) Commander U.S. ARMY AVIATION AND MISSILE COMMAND ATTN: AMSAM-RD-PS-SA REDSTONE ARSENEL, AL 35898	5. CAGE CODE 18876 7. CAGE CODE 55717	6. NOR NO. 4/18 R1R3006.4 8. DOCUMENT NO. 13048777

9. TITLE OF DOCUMENT	10. REVISION LETTER		11. ECP NO.
	a. CURRENT	b. NEW	
SKIN, LAUNCHER	F	G	MI-M7565

12. CONFIGURATION ITEM (OR SYSTEM) TO WHICH ECP APPLIES

M260 7-TUBE 2.75 INCH AIRCRAFT ROCKET LAUNCHER

13. DESCRIPTION OF REVISION

THE DRAWING HAS BEEN REVISED AND REDRAWN. THE CLOUDS DEPICT THE AREAS OF CHANGE.

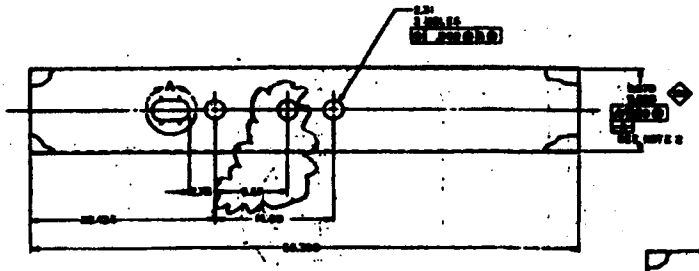

WAS

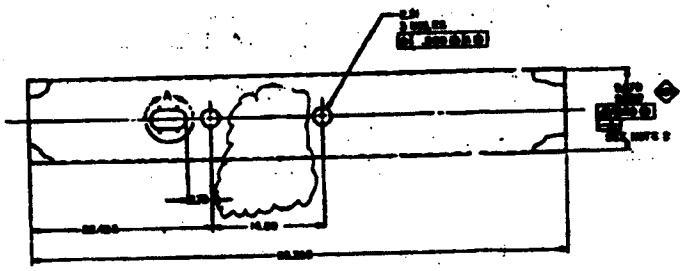

IS

14. THIS SECTION FOR GOVERNMENT USE ONLY

a. (X one)		
		(1) Existing document supplemented by this NOR may be used in manufacture.
		(2) Revised document must be received before manufacturer may incorporate this change.
		(3) Custodian of master document shall make above revision and furnish revised document.

b. ACTIVITY AUTHORIZED TO APPROVE CHANGE FOR GOVERNMENT	c. TYPED NAME (First, Middle Initial, Last)	
d. TITLE Ronald E. Elbe, Configuration Manager Chief, CCAC Production & Field Support Team AMSTA-AR-CCL-F	e. SIGNATURE Ronald E. Elbe	f. DATE SIGNED (YYYYMMDD) 20010531
15.a. ACTIVITY ACCOMPLISHING REVISION	b. REVISION COMPLETED (SIGNATURE)	c. DATE SIGNED (YYYYMMDD)

DD FORM 1695, AUG 96 (EG) PREVIOUS EDITION MAY BE USE

DISTRIBUTION STATEMENT A. APPROVED FOR PUBLIC RELEASE. DISTRIBUTION IS UNLIMITED.

NOTICE OF REVISION (NOR)
THIS REVISION DESCRIBED BELOW HAS BEEN AUTHORIZED FOR THE DOCUMENT LISTED

1. DATE (YYYYMMDD): 2001/05/14

Form Approved
OMB No. 0704-0188

The public reporting burden for this collection of information is estimated to average 2 hours per response, including the time for reviewing instructions, searching existing data sources, gathering and maintaining the data needed, and completing and reviewing the collection of information. Send comments regarding this burden estimate or any other aspect of this collection of information, including suggestions for reducing the burden, to Department of Defense, Washington Headquarters Services, Directorate for Information Operations and Reports (0704-0188), 1215 Jefferson Davis Highway, Suite 1204, Arlington, VA 22202-4302. Respondents should be aware that notwithstanding any other provision of law, no person shall be subject to any penalty for failing to comply with a collection of information if it does not display a currently valid OMB control number.
PLEASE DO NOT RETURN YOUR COMPLETED FORM TO THIS ADDRESS. RETURN COMPLETED FORM TO THE GOVERNMENT ISSUING CONTRACTING OFFICER FOR THE CONTRACT/PROCURING ACTIVITY NUMBER LISTED IN ITEM 2 OF THIS FORM.

2. PROCURING ACTIVITY NO. R1R3006

3. DODAAC

4. ORIGINATOR
a. TYPED NAME (First, Middle Initial, Last): Donald E. Davis

b. ADDRESS (Street, City, State, Zip Code)
Commander
U.S. ARMY AVIATION AND MISSILE COMMAND
ATTN: AMSAM-RD-PS-SA
REDSTONE ARSENAL, AL 35898

5. CAGE CODE: 18876

6. NOR NO.: 5/18R1R3006.5

7. CAGE CODE: 55717

8. DOCUMENT NO.: 13048778

9. TITLE OF DOCUMENT: LAUNCHER SKIN AND SUPPORT

10. REVISION LETTER
a. CURRENT: D
b. NEW: E

11. ECP NO.: MI-M7565

12. CONFIGURATION ITEM (OR SYSTEM) TO WHICH ECP APPLIES
M260 7-TUBE 2.75 INCH AIRCRAFT ROCKET LAUNCHER

13. DESCRIPTION OF REVISION
THE DRAWING HAS BEEN REVISED AND REDRAWN. THE CLOUDS DEPICT THE AREAS OF CHANGE.

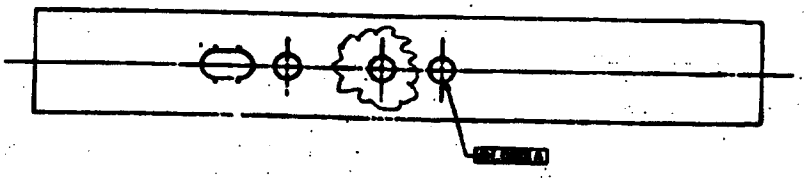

WAS

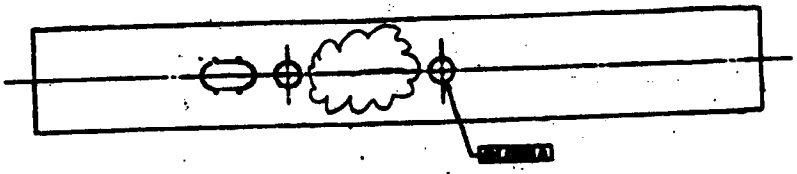

IS

14. THIS SECTION FOR GOVERNMENT USE ONLY

a. (X one)
- [ ] (1) Existing document supplemented by this NOR may be used in manufacture.
- [ ] (2) Revised document must be received before manufacturer may incorporate this change.
- [ ] (3) Custodian of master document shall make above revision and furnish revised document.

b. ACTIVITY AUTHORIZED TO APPROVE CHANGE FOR GOVERNMENT

c. TYPED NAME (First, Middle Initial, Last)

d. TITLE
Ronald E. Elbe, Configuration Manager
Chief, CCAC Production & Field Support Team
AMSTA-AR-CCL-F

e. SIGNATURE

f. DATE SIGNED (YYYYMMDD): 20010531

15.a. ACTIVITY ACCOMPLISHING REVISION

b. REVISION COMPLETED (SIGNATURE)

c. DATE SIGNED (YYYYMMDD)

DD FORM 1695, AUG 96 (EG) PREVIOUS EDITION MAY BE USE

DISTRIBUTION STATEMENT A. APPROVED FOR PUBLIC RELEASE. DISTRIBUTION IS UNLIMITED.

NOTICE OF REVISION (NOR)
THIS REVISION DESCRIBED BELOW HAS BEEN AUTHORIZED FOR THE DOCUMENT LISTED

1. DATE (YYYYMMDD)	2001/05/14
Form Approved OMB No. 0704-0188	
2. PROCURING ACTIVITY NO.	RIR3006
3. DODAAC	

The public reporting burden for this collection of information is estimated to average 2 hours per response, including the time for reviewing instructions, searching existing data sources, gathering and maintaining the data needed, and completing and reviewing the collection of information. Send comments regarding this burden estimate or any other aspect of this collection of information, including suggestions for reducing the burden, to Department of Defense, Washington Headquarters Services, Directorate for Information Operations and Reports (0704-0188), 1215 Jefferson Davis Highway, Suite 1204, Arlington, VA 22202-4302. Respondents should be aware that notwithstanding any other provision of law, no person shall be subject to any penalty for failing to comply with a collection of information if it does not display a currently valid OMB control number.
PLEASE DO NOT RETURN YOUR COMPLETED FORM TO THIS ADDRESS. RETURN COMPLETED FORM TO THE GOVERNMENT ISSUING CONTRACTING OFFICER FOR THE CONTRACT/PROCURING ACTIVITY NUMBER LISTED IN ITEM 2 OF THIS FORM.

4. ORIGINATOR a. TYPED NAME (First, Middle Initial, Last) Donald E. Davis	b. ADDRESS (Street, City, State, Zip Code) Commander U.S. ARMY AVIATION AND MISSILE COMMAND ATTN: AMSAM-RD-PS-SA REDSTONE ARSENAL, AL 35898	5. CAGE CODE 19876 7. CAGE CODE 55717	6. NOR NO. 6/18 RIR3006.6 8. DOCUMENT NO. 13048780
9. TITLE OF DOCUMENT STRONGBACK SUPPORT	10. REVISION LETTER a. CURRENT: G b. NEW: H		11. ECP NO. MI-M7565

12. CONFIGURATION ITEM (OR SYSTEM) TO WHICH ECP APPLIES
M260 7-TUBE 2.75 INCH AIRCRAFT ROCKET LAUNCHER

13. DESCRIPTION OF REVISION
THE DRAWING HAS BEEN REVISED AND REDRAWN. THE CLOUDS DEPICT THE AREAS OF CHANGE.

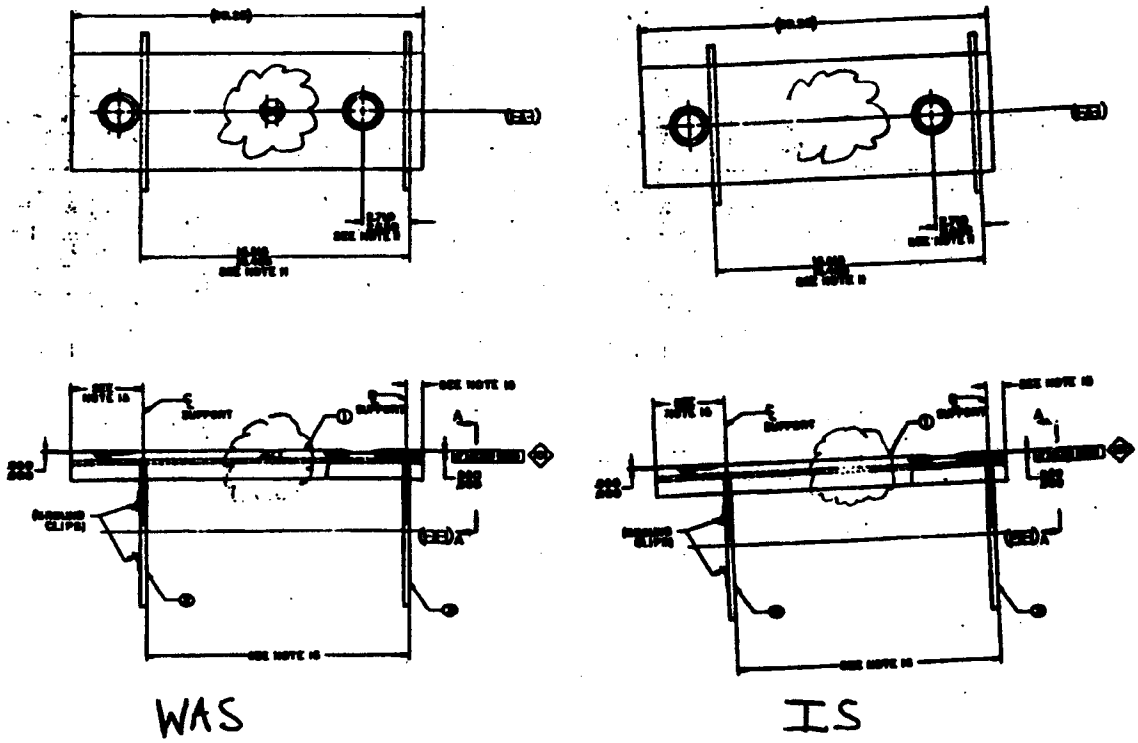

14. THIS SECTION FOR GOVERNMENT USE ONLY

a. (X one)
- [ ] (1) Existing document supplemented by this NOR may be used in manufacture.
- [ ] (2) Revised document must be received before manufacturer may incorporate this change.
- [ ] (3) Custodian of master document shall make above revision and furnish revised document.

b. ACTIVITY AUTHORIZED TO APPROVE CHANGE FOR GOVERNMENT	c. TYPED NAME (First, Middle Initial, Last)	
d. TITLE Ronald E. Elbe, Configuration Manager Chief, CCAC Production & Field Support Team AMSTA-AR-CCL-F	e. SIGNATURE Ronald E. Elbe	f. DATE SIGNED (YYYYMMDD) 20010531
15.a. ACTIVITY ACCOMPLISHING REVISION	b. REVISION COMPLETED (SIGNATURE)	c. DATE SIGNED (YYYYMMDD)

DD FORM 1695, AUG 96 (EG) PREVIOUS EDITION MAY BE USE

DISTRIBUTION STATEMENT A. APPROVED FOR PUBLIC RELEASE. DISTRIBUTION IS UNLIMITED.

NOTICE OF REVISION (NOR)
THIS REVISION DESCRIBED BELOW HAS BEEN AUTHORIZED FOR THE DOCUMENT LISTED

1. DATE (YYYYMMDD): 2001/05/14

Form Approved
OMB No. 0704-0188

The public reporting burden for this collection of information is estimated to average 2 hours per response, including the time for reviewing instructions, searching existing data sources, gathering and maintaining the data needed, and completing and reviewing the collection of information. Send comments regarding this burden estimate or any other aspect of this collection of information, including suggestions for reducing the burden, to Department of Defense, Washington Headquarters Services, Directorate for Information Operations and Reports (0704-0188), 1215 Jefferson Davis Highway, Suite 1204, Arlington, VA 22202-4302. Respondents should be aware that notwithstanding any other provision of law, no person shall be subject to any penalty for failing to comply with a collection of information if it does not display a currently valid OMB control number.
PLEASE DO NOT RETURN YOUR COMPLETED FORM TO THIS ADDRESS. RETURN COMPLETED FORM TO THE GOVERNMENT ISSUING CONTRACTING OFFICER FOR THE CONTRACT/PROCURING ACTIVITY NUMBER LISTED IN ITEM 2 OF THIS FORM.

2. PROCURING ACTIVITY NO.: R1R3006

3. DODAAC:

4. ORIGINATOR
a. TYPED NAME (First, Middle Initial, Last): Donald E. Davis

b. ADDRESS (Street, City, State, Zip Code):
Commander
U.S. ARMY AVIATION AND MISSILE COMMAND
ATTN: AMSAM-RD-PS-SA
REDSTONE ARSENAL, AL 35898

5. CAGE CODE: 18876

6. NOR NO.: 7/18 R1R3006.7

7. CAGE CODE: 55717

8. DOCUMENT NO.: 13048800

9. TITLE OF DOCUMENT: DETENT ASSEMBLY

10. REVISION LETTER
a. CURRENT: G
b. NEW: H

11. ECP NO.: MI-M7565

12. CONFIGURATION ITEM (OR SYSTEM) TO WHICH ECP APPLIES
M260 7-TUBE & M261 19-TUBE 2.75 INCH AIRCRAFT ROCKET LAUNCHER

13. DESCRIPTION OF REVISION
THE DRAWING HAS BEEN REVISED AND REDRAWN. THE CLOUDS DEPICT THE AREAS OF CHANGE.

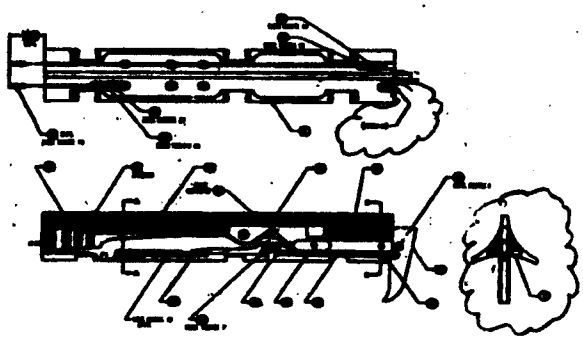

WAS

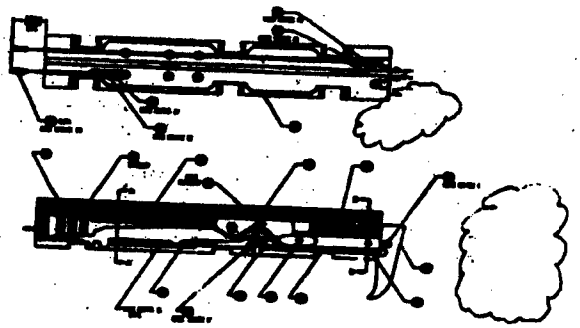

IS

14. THIS SECTION FOR GOVERNMENT USE ONLY
a. (X one)
(1) Existing document supplemented by this NOR may be used in manufacture.
(2) Revised document must be received before manufacturer may incorporate this change.
(3) Custodian of master document shall make above revision and furnish revised document.

b. ACTIVITY AUTHORIZED TO APPROVE CHANGE FOR GOVERNMENT

c. TYPED NAME (First, Middle Initial, Last)

d. TITLE
Ronald E. Elbe, Configuration Manager
Chief, CCAC Production & Field Support Team
AMSTA-AR-CCL-F

e. SIGNATURE

f. DATE SIGNED (YYYYMMDD): 20010531

15.a. ACTIVITY ACCOMPLISHING REVISION

b. REVISION COMPLETED (SIGNATURE)

c. DATE SIGNED (YYYYMMDD)

DD FORM 1695, AUG 96 (EG) PREVIOUS EDITION MAY BE USE

DISTRIBUTION STATEMENT A. APPROVED FOR PUBLIC RELEASE. DISTRIBUTION IS UNLIMITED.

NOTICE OF REVISION (NOR) THIS REVISION DESCRIBED BELOW HAS BEEN AUTHORIZED FOR THE DOCUMENT LISTED	1. DATE (YYYYMMDD) 2001/05/14	Form Approved OMB No. 0704-0188
The public reporting burden for this collection of information is estimated to average 2 hours per response, including the time for reviewing instructions, searching existing data sources, gathering and maintaining the data needed, and completing and reviewing the collection of information. Send comments regarding this burden estimate or any other aspect of this collection of information, including suggestions for reducing the burden, to Department of Defense, Washington Headquarters Services, Directorate for Information Operations and Reports (0704-0188), 1215 Jefferson Davis Highway, Suite 1204, Arlington, VA 22202-4302. Respondents should be aware that notwithstanding any other provision of law, no person shall be subject to any penalty for failing to comply with a collection of information if it does not display a currently valid OMB control number. PLEASE DO NOT RETURN YOUR COMPLETED FORM TO THIS ADDRESS. RETURN COMPLETED FORM TO THE GOVERNMENT ISSUING CONTRACTING OFFICER FOR THE CONTRACT/PROCURING ACTIVITY NUMBER LISTED IN ITEM 2 OF THIS FORM.		2. PROCURING ACTIVITY NO. R1R3006 3. DODAAC

4. ORIGINATOR a. TYPED NAME (First, Middle Initial, Last) Donald E. Davis	b. ADDRESS (Street, City, State, Zip Code) Commander U.S. ARMY AVIATION AND MISSILE COMMAND ATTN: AMSAM-RD-PS-SA REDSTONE ARSENAL, AL 35898	5. CAGE CODE 18876 7. CAGE CODE 55717	6. NOR NO. 8/18R1R3006.8 8. DOCUMENT NO. PL13048900

9. TITLE OF DOCUMENT	10. REVISION LETTER a. CURRENT	b. NEW	11. ECP NO.
PARTS LIST DETENT ASSEMBLY	D	E	MI-M7565

12. CONFIGURATION ITEM (OR SYSTEM) TO WHICH ECP APPLIES

M260 7-TUBE & M261 19-TUBE 2.75 INCH AIRCRAFT ROCKET LAUNCHER

13. DESCRIPTION OF REVISION

THE DRAWING HAS BEEN REVISED AND REDRAWN. THE CLOUDS DEPICT THE AREAS OF CHANGE.

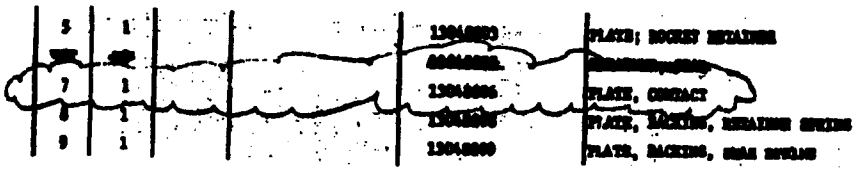

WAS

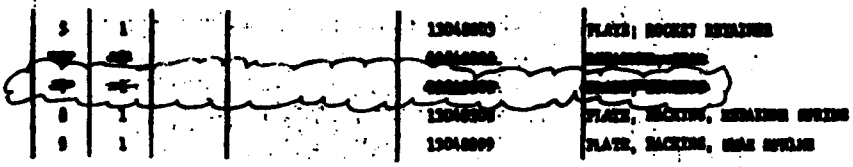

IS

14. THIS SECTION FOR GOVERNMENT USE ONLY

a. (X one)

- [ ] (1) Existing document supplemented by this NOR may be used in manufacture.
- [ ] (2) Revised document must be received before manufacturer may incorporate this change.
- [ ] (3) Custodian of master document shall make above revision and furnish revised document.

b. ACTIVITY AUTHORIZED TO APPROVE CHANGE FOR GOVERNMENT	c. TYPED NAME (First, Middle Initial, Last)	
d. TITLE Ronald E. Elbe, Configuration Manager Chief, CCAC Production & Field Support Team AMSTA-AR-CCL-F	e. SIGNATURE Ronald E. Elbe	f. DATE SIGNED (YYYYMMDD) 20010531
15.a. ACTIVITY ACCOMPLISHING REVISION	b. REVISION COMPLETED (SIGNATURE)	c. DATE SIGNED (YYYYMMDD)

DD FORM 1695, AUG 96 (EG) PREVIOUS EDITION MAY BE USE

DISTRIBUTION STATEMENT A. APPROVED FOR PUBLIC RELEASE. DISTRIBUTION IS UNLIMITED.

NOTICE OF REVISION (NOR)
THIS REVISION DESCRIBED BELOW HAS BEEN AUTHORIZED FOR THE DOCUMENT LISTED

1. DATE (YYYYMMDD): 2001/05/14

Form Approved
OMB No. 0704-0188

The public reporting burden for this collection of information is estimated to average 2 hours per response, including the time for reviewing instructions, searching existing data sources, gathering and maintaining the data needed, and completing and reviewing the collection of information. Send comments regarding this burden estimate or any other aspect of this collection of information, including suggestions for reducing the burden, to Department of Defense, Washington Headquarters Services, Directorate for Information Operations and Reports (0704-0188), 1215 Jefferson Davis Highway, Suite 1204, Arlington, VA 22202-4302. Respondents should be aware that notwithstanding any other provision of law, no person shall be subject to any penalty for failing to comply with a collection of information if it does not display a currently valid OMB control number.
PLEASE DO NOT RETURN YOUR COMPLETED FORM TO THIS ADDRESS. RETURN COMPLETED FORM TO THE GOVERNMENT ISSUING CONTRACTING OFFICER FOR THE CONTRACT/PROCURING ACTIVITY NUMBER LISTED IN ITEM 2 OF THIS FORM.

2. PROCURING ACTIVITY NO.: RTR3006

3. DODAAC:

4. ORIGINATOR
a. TYPED NAME (First, Middle Initial, Last): Donald E. Davis

b. ADDRESS (Street, City, State, Zip Code):
Commander
U.S. ARMY AVIATION AND MISSILE COMMAND
ATTN: AMSAM-RD-PS-SA
REDSTONE ARSENAL, AL 35898

5. CAGE CODE: 18876

6. NOR NO.: 9/1R1R3006.9

7. CAGE CODE: 55717

8. DOCUMENT NO.: 13048801

9. TITLE OF DOCUMENT: HOUSING, DETENT

10. REVISION LETTER
a. CURRENT: D
b. NEW: E

11. ECP NO.: MI-M7565

12. CONFIGURATION ITEM (OR SYSTEM) TO WHICH ECP APPLIES
M260 7-TUBE & M261 19-TUBE 2.75 INCH AIRCRAFT ROCKET LAUNCHER

13. DESCRIPTION OF REVISION
THE DRAWING HAS BE REVISED AND REDRAWN ON SHEETS 1 THRU 2. THE CLOUDS DEPICT THE AREAS OF CHANGE.

8. MATERIAL THERMOPLASTIC POLYESTER PER MIL-M-24519 TYPE GPT-3CF, COLOR BLACK PER FED-STD-595.
ALTERNATE MATERIAL: THERMOPLASTIC POLYESTER PER MIL-P-46161, GR B, CL 3. COLOR BLACK PER FED-STD-595

WAS

8. MATERIAL THERMOPLASTIC POLYESTER PER MIL-M-24519 TYPE GPT-3CF, COLOR BLACK PER FED-STD-595.
~~ALTERNATE MATERIAL: THERMOPLASTIC POLYESTER PER MIL-P-46161, GR B, CL 3. COLOR BLACK PER FED-STD-595.~~

IS

14. THIS SECTION FOR GOVERNMENT USE ONLY
a. (X one)
- [ ] (1) Existing document supplemented by this NOR may be used in manufacture.
- [ ] (2) Revised document must be received before manufacture may incorporate this change.
- [ ] (3) Custodian of master document shall make above revision and furnish revised document.

b. ACTIVITY AUTHORIZED TO APPROVE CHANGE FOR GOVERNMENT

c. TYPED NAME (First, Middle Initial, Last)

d. TITLE
Ronald E. Elbe, Configuration Manager
Chief, CCAC Production & Field Support Team
AMSTA-AR-CCL-F

e. SIGNATURE: Ronald E. Elbe

f. DATE SIGNED (YYYYMMDD): 20010531

15.a. ACTIVITY ACCOMPLISHING REVISION

b. REVISION COMPLETED (SIGNATURE)

c. DATE SIGNED (YYYYMMDD)

DISTRIBUTION STATEMENT A. APPROVED FOR PUBLIC RELEASE. DISTRIBUTION IS UNLIMITED.

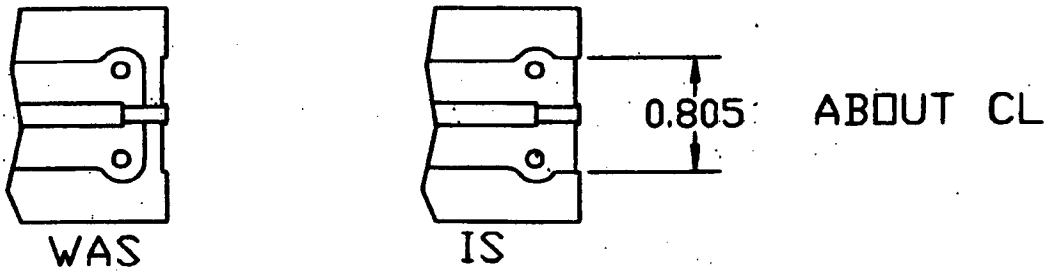

DRAWING 13048801, SHT 1, SEC 3B

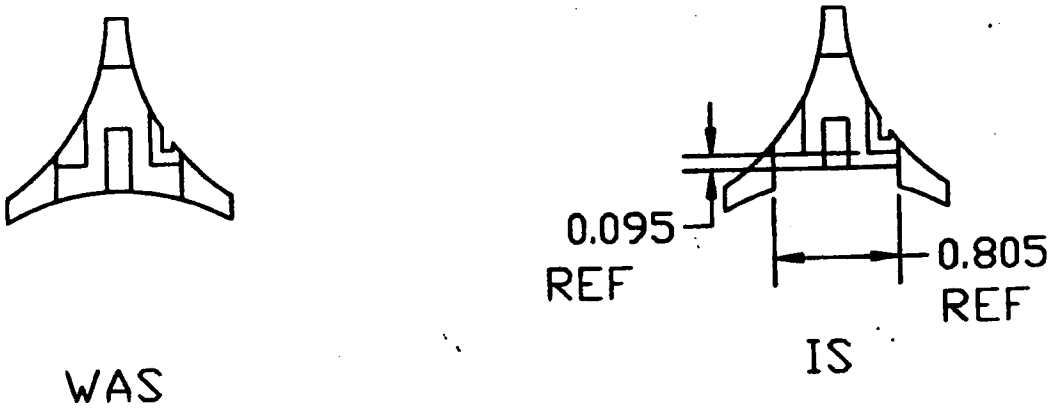

VIEW H-H DRAWING 13048801

NOTICE OF REVISION (NOR) THIS REVISION DESCRIBED BELOW HAS BEEN AUTHORIZED FOR THE DOCUMENT LISTED	1. DATE (YYYYMMDD) 2001/05/14	Form Approved OMB No. 0704-0188
The public reporting burden for this collection of information is estimated to average 2 hours per response, including the time for reviewing instructions, searching existing data sources, gathering and maintaining the data needed, and completing and reviewing the collection of information. Send comments regarding this burden estimate or any other aspect of this collection of information, including suggestions for reducing the burden, to Department of Defense, Washington Headquarters Services, Directorate for Information Operations and Reports (0704-0188), 1215 Jefferson Davis Highway, Suite 1204, Arlington, VA 22202-4302. Respondents should be aware that notwithstanding any other provision of law, no person shall be subject to any penalty for failing to comply with a collection of information if it does not display a currently valid OMB control number. PLEASE DO NOT RETURN YOUR COMPLETED FORM TO THIS ADDRESS. RETURN COMPLETED FORM TO THE GOVERNMENT ISSUING CONTRACTING OFFICER FOR THE CONTRACT/PROCURING ACTIVITY NUMBER LISTED IN ITEM 2 OF THIS FORM.	2. PROCURING ACTIVITY NO. R1R3006 3. DODAAC	

4. ORIGINATOR a. TYPED NAME (First, Middle Initial, Last) Donald E. Davis	b. ADDRESS (Street, City, State, Zip Code) Commander U.S. ARMY AVIATION AND MISSILE COMMAND ATTN: AMSAM-RD-PS-SA REDSTONE ARSENEL, AL 35898	5. CAGE CODE 18876 7. CAGE CODE 55717	6. NOR NO. 10/R1R3006.10 8. DOCUMENT NO. 13048812

9. TITLE OF DOCUMENT	10. REVISION LETTER		11. ECP NO.
	a. CURRENT	b. NEW	
SPRING, CONTACT	G	H	MI-M7565

12. CONFIGURATION ITEM (OR SYSTEM) TO WHICH ECP APPLIES

M260 7-TUBE & M261 19-TUBE 2.75 INCH AIRCRAFT ROCKET LAUNCHER

13. DESCRIPTION OF REVISION

THE DRAWING HAS BEEN REVISED AND REDRAWN ON SHEET 2. THE CLOUDS DEPICT THE AREAS OF CHANGE.

14. THIS SECTION FOR GOVERNMENT USE ONLY

a. (X one)

- [ ] (1) Existing document supplemented by this NOR may be used in manufacture.
- [ ] (2) Revised document must be received before manufacturer may incorporate this change.
- [ ] (3) Custodian of master document shall make above revision and furnish revised document.

b. ACTIVITY AUTHORIZED TO APPROVE CHANGE FOR GOVERNMENT	c. TYPED NAME (First, Middle Initial, Last)	
d. TITLE Ronald E. Elbe, Configuration Manager Chief, CCAC Production & Field Support Team AMSTA-AR-CCL-F	e. SIGNATURE Ronald E. Elbe	f. DATE SIGNED (YYYYMMDD) 20010531
15.a. ACTIVITY ACCOMPLISHING REVISION	b. REVISION COMPLETED (SIGNATURE)	c. DATE SIGNED (YYYYMMDD)

DISTRIBUTION STATEMENT A. APPROVED FOR PUBLIC RELEASE. DISTRIBUTION IS UNLIMITED.

ECP NO. MI-M7565 NOR 10/18 SHEET 2 OF 2

WAS

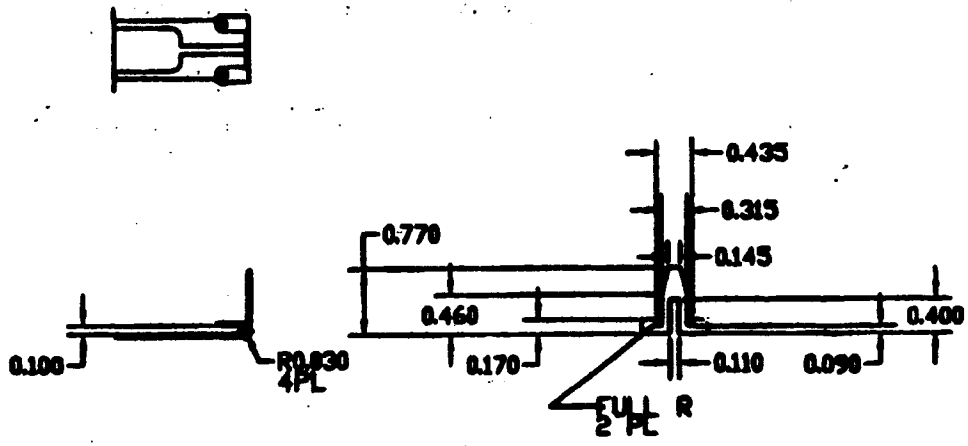

IS

SHEET STEEL, CORROSION RESISTANT (17-7) IN ACCORDANCE WITH MIL-S-25043, CONDITION A, HEAT TREATED TO RH 950 CONDITION FROM DRAWING NO. 958AS169

NOTICE OF REVISION (NOR) THIS REVISION DESCRIBED BELOW HAS BEEN AUTHORIZED FOR THE DOCUMENT LISTED	1. DATE (YYYYMMDD) 2001/05/14	Form Approved OMB No. 0704-0188
The public reporting burden for this collection of information is estimated to average 2 hours per response, including the time for reviewing instructions, searching existing data sources, gathering and maintaining the data needed, and completing and reviewing the collection of information. Send comments regarding this burden estimate or any other aspect of this collection of information, including suggestions for reducing this burden, to Department of Defense, Washington Headquarters Services, Directorate for Information Operations and Reports (0704-0188), 1215 Jefferson Davis Highway, Suite 1204, Arlington, VA 22202-4302. Respondents should be aware that notwithstanding any other provision of law, no person shall be subject to any penalty for failing to comply with a collection of information if it does not display a currently valid OMB control number. PLEASE DO NOT RETURN YOUR COMPLETED FORM TO THIS ADDRESS. RETURN COMPLETED FORM TO THE GOVERNMENT ISSUING CONTRACTING OFFICER FOR THE CONTRACT/PROCURING ACTIVITY NUMBER LISTED IN ITEM 2 OF THIS FORM.		2. PROCURING ACTIVITY NO. R1R3006 3. DODAAC

4. ORIGINATOR a. TYPED NAME (First, Middle Initial, Last)	b. ADDRESS (Street, City, State, Zip Code)	5. CAGE CODE	6. NOR NO.
Donald E. Davis	Commander U.S. ARMY AVIATION AND MISSILE COMMAND ATTN: AMSAM-RD-PS-SA REDSTONE ARSENEL, AL 35898	18876 7. CAGE CODE 18876	11/R1R3006.11 8. DOCUMENT NO. 13048824

9. TITLE OF DOCUMENT	10. REVISION LETTER		11. ECP NO.
	a. CURRENT	b. NEW	
SKIN, LAUNCHER	C	D	MI-M7565

12. CONFIGURATION ITEM (OR SYSTEM) TO WHICH ECP APPLIES

M261 19-TUBE 2.75 INCH AIRCRAFT ROCKET LAUNCHER

13. DESCRIPTION OF REVISION

THE DRAWING HAS BEEN REVISED AND REDRAWN. THE CLOUDS DEPICT THE AREAS OF CHANGE.

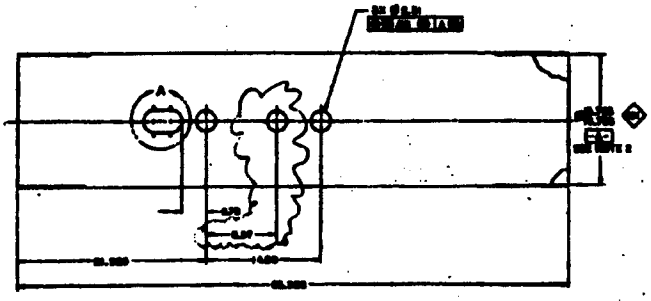

WAS

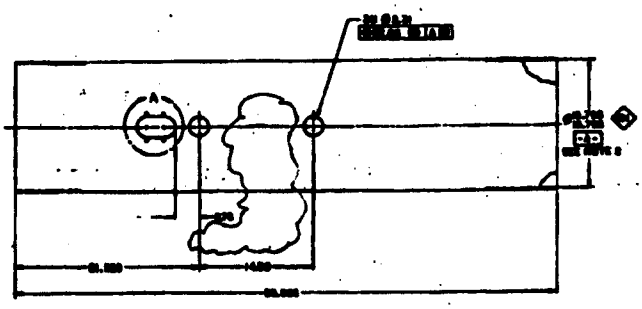

IS

14. THIS SECTION FOR GOVERNMENT USE ONLY

a. (X one)

- [ ] (1) Existing document supplemented by this NOR may be used in manufacture.
- [ ] (2) Revised document must be received before manufacturer may incorporate this change.
- [ ] (3) Custodian of master document shall make above revision and furnish revised document.

b. ACTIVITY AUTHORIZED TO APPROVE CHANGE FOR GOVERNMENT	c. TYPED NAME (First, Middle Initial, Last)	
d. TITLE Ronald E. Elbe, Configuration Manager Chief, CCAC Production & Field Support Team AMSTA-AR-CCL-F	e. SIGNATURE Ronald E. Elbe	f. DATE SIGNED (YYYYMMDD) 20010531
15.a. ACTIVITY ACCOMPLISHING REVISION	b. REVISION COMPLETED (SIGNATURE)	c. DATE SIGNED (YYYYMMDD)

DD FORM 1695, AUG 96 (EG) PREVIOUS EDITION MAY BE USE

DISTRIBUTION STATEMENT A. APPROVED FOR PUBLIC RELEASE. DISTRIBUTION IS UNLIMITED.

NOTICE OF REVISION (NOR)
THIS REVISION DESCRIBED BELOW HAS BEEN AUTHORIZED FOR THE DOCUMENT LISTED

1. DATE (YYYYMMDD)	2001/05/14
Form Approved OMB No. 0704-0188	
2. PROCURING ACTIVITY NO.	R1R3006
3. DODAAC	

The public reporting burden for this collection of information is estimated to average 2 hours per response, including the time for reviewing instructions, searching existing data sources, gathering and maintaining the data needed, and completing and reviewing the collection of information. Send comments regarding this burden estimate or any other aspect of this collection of information, including suggestions for reducing the burden, to Department of Defense, Washington Headquarters Services, Directorate for Information Operations and Reports (0704-0188), 1215 Jefferson Davis Highway, Suite 1204, Arlington, VA 22202-4302. Respondents should be aware that notwithstanding any other provision of law, no person shall be subject to any penalty for failing to comply with a collection of information if it does not display a currently valid OMB control number.
PLEASE DO NOT RETURN YOUR COMPLETED FORM TO THIS ADDRESS. RETURN COMPLETED FORM TO THE GOVERNMENT ISSUING CONTRACTING OFFICER FOR THE CONTRACT/PROCURING ACTIVITY NUMBER LISTED IN ITEM 2 OF THIS FORM.

4. ORIGINATOR a. TYPED NAME (First, Middle Initial, Last) Donald E. Davis	b. ADDRESS (Street, City, State, Zip Code) Commander U.S. ARMY AVIATION AND MISSILE COMMAND ATTN: AMSAM-RD-PS-SA REDSTONE ARSENAL, AL 35898	5. CAGE CODE 18876 7. CAGE CODE 18876	6. NOR NO. 12/R1R3006.12 8. DOCUMENT NO. 13048827
9. TITLE OF DOCUMENT CONNECTOR, COAXIAL-FUZE	10. REVISION LETTER a. CURRENT: C b. NEW: D		11. ECP NO. MI-M7565

12. CONFIGURATION ITEM (OR SYSTEM) TO WHICH ECP APPLIES
M261 19-TUBE 2.75 INCH AIRCRAFT ROCKET LAUNCHER

13. DESCRIPTION OF REVISION
THE DRAWING HAS BEEN REVISED AND REDRAWN. THE CLOUDS DEPICT THE AREAS OF CHANGE.

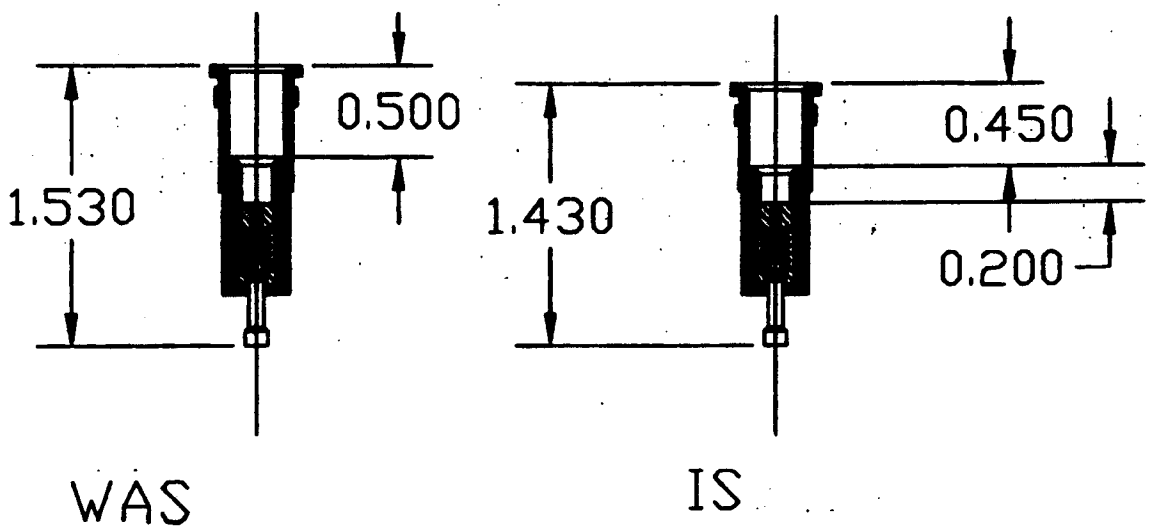

14. THIS SECTION FOR GOVERNMENT USE ONLY

a. (X one)
- [ ] (1) Existing document supplemented by this NOR may be used in manufacture.
- [ ] (2) Revised document must be received before manufacturer may incorporate this change.
- [ ] (3) Custodian of master document shall make above revision and furnish revised document.

b. ACTIVITY AUTHORIZED TO APPROVE CHANGE FOR GOVERNMENT	c. TYPED NAME (First, Middle Initial, Last)	
d. TITLE Ronald E. Elbe, Configuration Manager Chief, CCAC Production & Field Support Team AMSTA-AR-CCL-F	e. SIGNATURE Ronald E Elbe	f. DATE SIGNED (YYYYMMDD) 20010531
15.a. ACTIVITY ACCOMPLISHING REVISION	b. REVISION COMPLETED (SIGNATURE)	c. DATE SIGNED (YYYYMMDD)

DD FORM 1695, AUG 96 (EG) PREVIOUS EDITION MAY BE USE

DISTRIBUTION STATEMENT A. APPROVED FOR PUBLIC RELEASE. DISTRIBUTION IS UNLIMITED.

NOTICE OF REVISION (NOR) THIS REVISION DESCRIBED BELOW HAS BEEN AUTHORIZED FOR THE DOCUMENT LISTED	1. DATE (YYYYMMDD) 2001/05/14	Form Approved OMB No. 0704-0188
The public reporting burden for this collection of information is estimated to average 2 hours per response, including the time for reviewing instructions, searching existing data sources, gathering and maintaining the data needed, and completing and reviewing the collection of information. Send comments regarding this burden estimate or any other aspect of this collection of information, including suggestions for reducing the burden, to Department of Defense, Washington Headquarters Services, Directorate for Information Operations and Reports (0704-0188), 1215 Jefferson Davis Highway, Suite 1204, Arlington, VA 22202-4302. Respondents should be aware that notwithstanding any other provision of law, no person shall be subject to any penalty for failing to comply with a collection of information if it does not display a currently valid OMB control number. PLEASE DO NOT RETURN YOUR COMPLETED FORM TO THIS ADDRESS. RETURN COMPLETED FORM TO THE GOVERNMENT ISSUING CONTRACTING OFFICER FOR THE CONTRACT/PROCURING ACTIVITY NUMBER LISTED IN ITEM 2 OF THIS FORM.		2. PROCURING ACTIVITY NO. R1R3006 3. DODAAC

4. ORIGINATOR a. TYPED NAME (First, Middle Initial, Last) Donald E. Davis	b. ADDRESS (Street, City, State, Zip Code) Commander U.S. ARMY AVIATION AND MISSILE COMMAND ATTN: AMSAM-RD-PS-SA REDSTONE ARSENAL, AL 35898	5. CAGE CODE 18876 7. CAGE CODE 55717	6. NOR NO. 13/R1R3006.13 8. DOCUMENT NO. 13048830

9. TITLE OF DOCUMENT	10. REVISION LETTER		11. ECP NO.
	a. CURRENT	b. NEW	
CONNECTOR, COAXIAL-FUZE	E	F	MI-M7565

12. CONFIGURATION ITEM (OR SYSTEM) TO WHICH ECP APPLIES

M260 7-TUBE 2.75 INCH AIRCRAFT ROCKET LAUNCHER

13. DESCRIPTION OF REVISION

THE DRAWING HAS BEEN REVISED AND REDRAWN ON SHEETS 2 THRU 3. THE CLOUDS DEPICT THE AREAS OF CHANGE.

14. THIS SECTION FOR GOVERNMENT USE ONLY

a. (X one)

- [ ] (1) Existing document supplemented by this NOR may be used in manufacture.
- [ ] (2) Revised document must be received before manufacturer may incorporate this change.
- [ ] (3) Custodian of master document shall make above revision and furnish revised document.

b. ACTIVITY AUTHORIZED TO APPROVE CHANGE FOR GOVERNMENT	c. TYPED NAME (First, Middle Initial, Last)	
d. TITLE Ronald E. Elbe, Configuration Manager Chief, CCAC Production & Field Support Team AMSTA-AR-CCL-F	e. SIGNATURE Ronald E. Elbe	f. DATE SIGNED (YYYYMMDD) 20010531
15.a. ACTIVITY ACCOMPLISHING REVISION	b. REVISION COMPLETED (SIGNATURE)	c. DATE SIGNED (YYYYMMDD)

ECP NO. MI-M7565 NOR 13/18 SHEET 2 OF 3

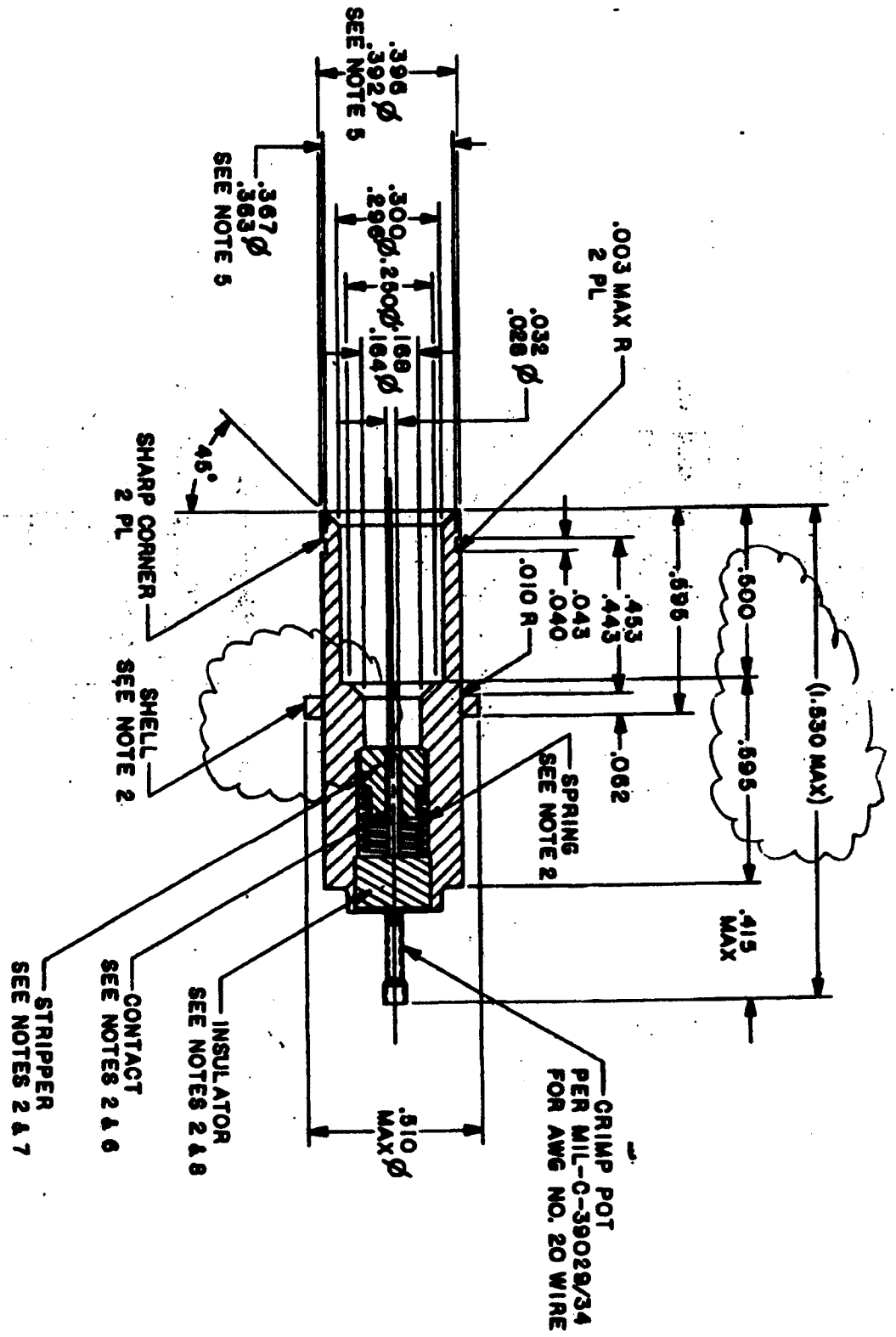

N/A

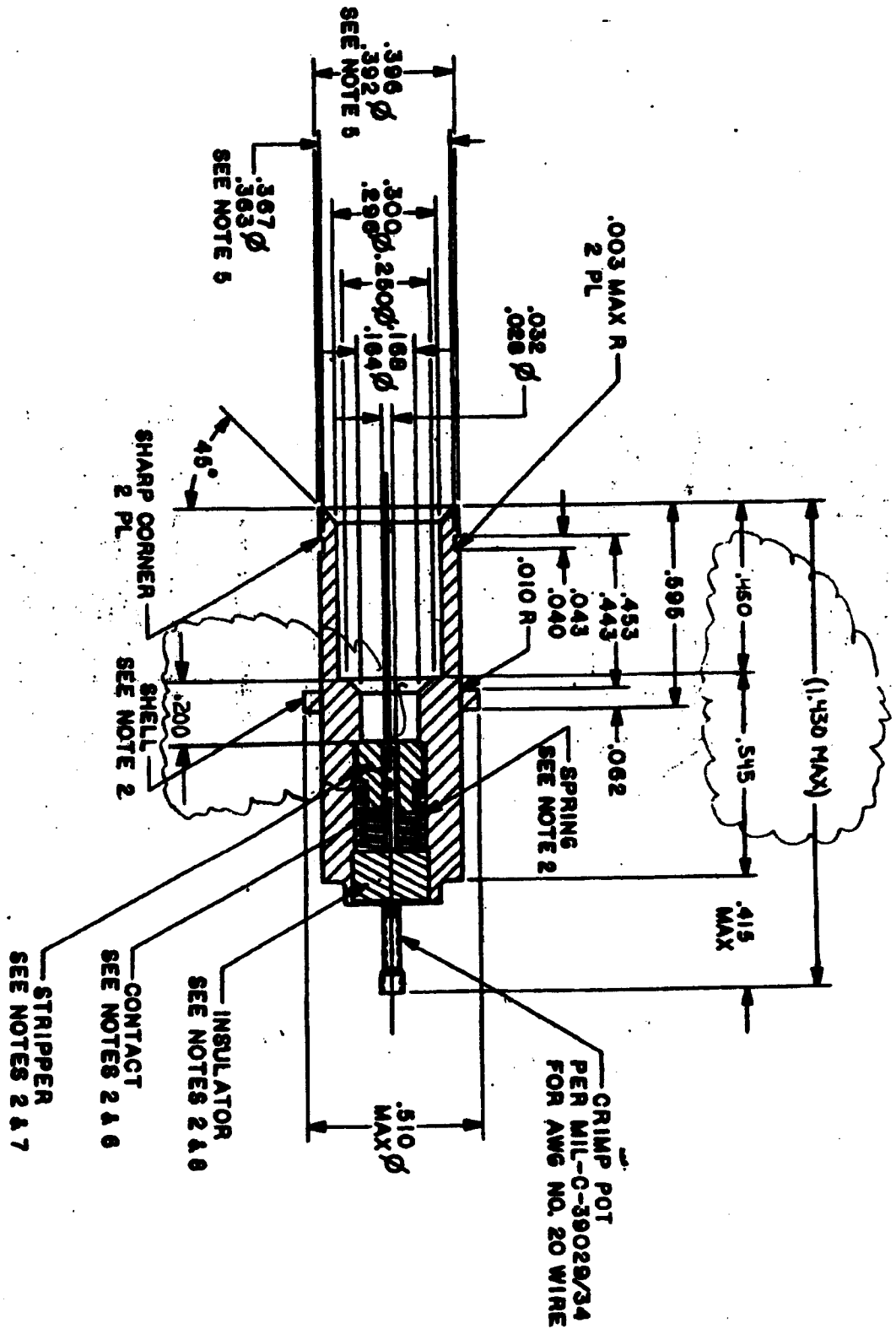
.396 Ø
.392
SEE NOTE 5
.367
.363 Ø
SEE NOTE 5
.300
.296 Ø
.280 Ø
.168
.164 Ø
.003 MAX R
2 PL
.032
.028 Ø
46°
SHARP CORNER
2 PL
.010 R
.453
.443
.043
.040
.595
.450
.545
(1.430 MAX)
.062
SPRING
SEE NOTE 2
.200
SHELL
SEE NOTE 2
.415
MAX
CRIMP POT
PER MIL-C-39029/34
FOR AWG NO. 20 WIRE
.510
MAX Ø
INSULATOR
SEE NOTES 2 & 8
CONTACT
SEE NOTES 2 & 6
STRIPPER
SEE NOTES 2 & 7

FIG

NOTICE OF REVISION (NOR) THIS REVISION DESCRIBED BELOW HAS BEEN AUTHORIZED FOR THE DOCUMENT LISTED	1. DATE (YYYYMMDD) 2001/05/14	Form Approved OMB No. 0704-0188
The public reporting burden for this collection of information is estimated to average 2 hours per response, including the time for reviewing instructions, searching existing data sources, gathering and maintaining the data needed, and completing and reviewing the collection of information. Send comments regarding this burden estimate or any other aspect of this collection of information, including suggestions for reducing the burden, to Department of Defense, Washington Headquarters Services, Directorate for Information Operations and Reports (0704-0188), 1215 Jefferson Davis Highway, Suite 1204, Arlington, VA 22202-4302. Respondents should be aware that notwithstanding any other provision of law, no person shall be subject to any penalty for failing to comply with a collection of information if it does not display a currently valid OMB control number. PLEASE DO NOT RETURN YOUR COMPLETED FORM TO THIS ADDRESS. RETURN COMPLETED FORM TO THE GOVERNMENT ISSUING CONTRACTING OFFICER FOR THE CONTRACT/PROCURING ACTIVITY NUMBER LISTED IN ITEM 2 OF THIS FORM.	2. PROCURING ACTIVITY NO. R1R3006 3. DODAAC	

4. ORIGINATOR a. TYPED NAME (First, Middle Initial, Last) Donald E. Davis	b. ADDRESS (Street, City, State, Zip Code) Commander U.S. ARMY AVIATION AND MISSILE COMMAND ATTN: AMSAM-RD-PS-SA REDSTONE ARSENAL, AL 35898	5. CAGE CODE 18876 7. CAGE CODE 18876	6. NOR NO. 14 R1R3006.14 8. DOCUMENT NO. 13048840

9. TITLE OF DOCUMENT	10. REVISION LETTER		11. ECP NO.
LAUNCHER TUBE ASSEMBLY	a. CURRENT A	b. NEW B	MI-M7565

12. CONFIGURATION ITEM (OR SYSTEM) TO WHICH ECP APPLIES

M261 19-TUBE 2.75 INCH AIRCRAFT ROCKET LAUNCHER

13. DESCRIPTION OF REVISION

THE DRAWING HAS BEEN REVISED AND REDRAWN. THE CLOUDS DEPICT THE AREAS OF CHANGE.

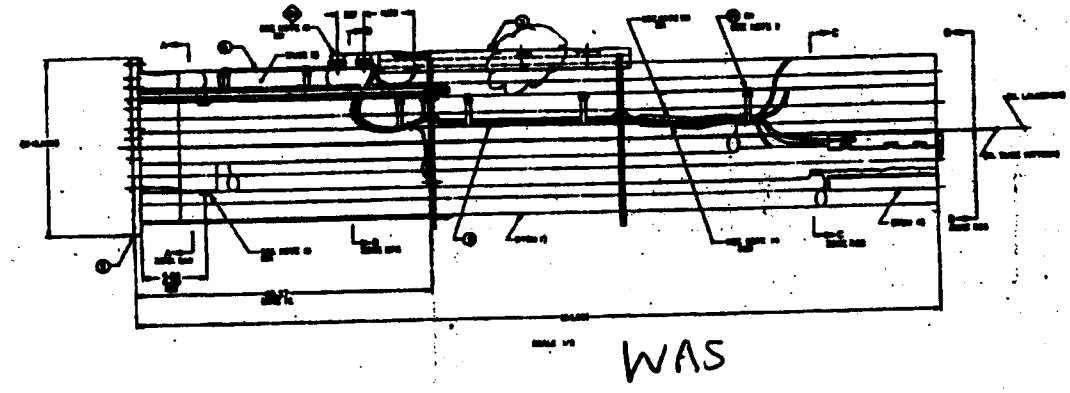

WAS

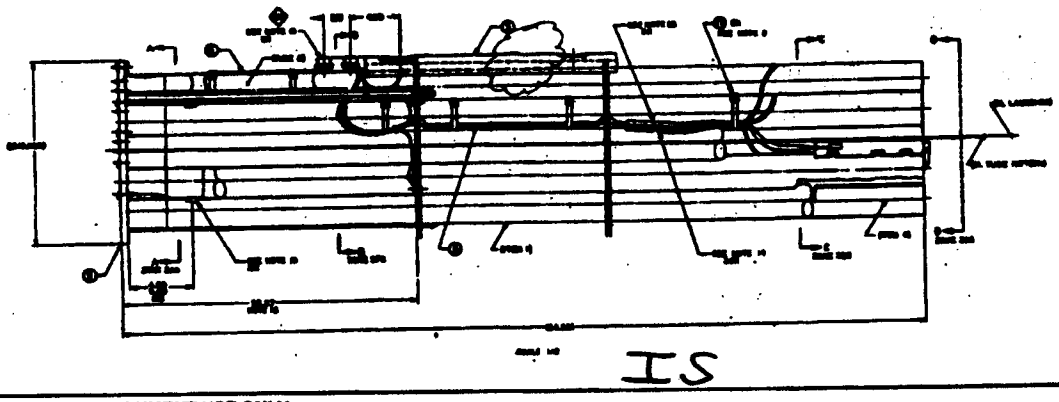

IS

14. THIS SECTION FOR GOVERNMENT USE ONLY

a. (X one)		
		(1) Existing document supplemented by this NOR may be used in manufacture.
		(2) Revised document must be received before manufacturer may incorporate this change.
		(3) Custodian of master document shall make above revision and furnish revised document.

b. ACTIVITY AUTHORIZED TO APPROVE CHANGE FOR GOVERNMENT	c. TYPED NAME (First, Middle Initial, Last)	
d. TITLE Ronald E. Elbe, Configuration Manager Chief, CCAC Production & Field Support Team AMSTA-AR-CCL-F	e. SIGNATURE Ronald E. Elbe	f. DATE SIGNED (YYYYMMDD) 20010531
15.a. ACTIVITY ACCOMPLISHING REVISION	b. REVISION COMPLETED (SIGNATURE)	c. DATE SIGNED (YYYYMMDD)

DD FORM 1695, AUG 96 (EG) PREVIOUS EDITION MAY BE USE

DISTRIBUTION STATEMENT A. APPROVED FOR PUBLIC RELEASE. DISTRIBUTION IS UNLIMITED.

NOTICE OF REVISION (NOR)
THIS REVISION DESCRIBED BELOW HAS BEEN AUTHORIZED FOR THE DOCUMENT LISTED

1. DATE (YYYYMMDD): 2001/05/14

Form Approved
OMB No. 0704-0188

The public reporting burden for this collection of information is estimated to average 2 hours per response, including the time for reviewing instructions, searching existing data sources, gathering and maintaining the data needed, and completing and reviewing the collection of information. Send comments regarding this burden estimate or any other aspect of this collection of information, including suggestions for reducing the burden, to Department of Defense, Washington Headquarters Services, Directorate for Information Operations and Reports (0704-0188), 1215 Jefferson Davis Highway, Suite 1204, Arlington, VA 22202-4302. Respondents should be aware that notwithstanding any other provision of law, no person shall be subject to any penalty for failing to comply with a collection of information if it does not display a currently valid OMB control number.
PLEASE DO NOT RETURN YOUR COMPLETED FORM TO THIS ADDRESS. RETURN COMPLETED FORM TO THE GOVERNMENT ISSUING CONTRACTING OFFICER FOR THE CONTRACT/PROCURING ACTIVITY NUMBER LISTED IN ITEM 2 OF THIS FORM.

2. PROCURING ACTIVITY NO.: R1R3006

3. DODAAC:

4. ORIGINATOR
a. TYPED NAME (First, Middle Initial, Last): Donald E. Davis
b. ADDRESS (Street, City, State, Zip Code): Commander, U.S. ARMY AVIATION AND MISSILE COMMAND, ATTN: AMSAM-RD-PS-SA, REDSTONE ARSENAL, AL 35898

5. CAGE CODE: 18876

6. NOR NO.: 15/R1R3006.15

7. CAGE CODE: 18876

8. DOCUMENT NO.: 13048848

9. TITLE OF DOCUMENT: STRONGBACK, SUPPORT

10. REVISION LETTER
a. CURRENT: B
b. NEW: C

11. ECP NO.: MI-M7565

12. CONFIGURATION ITEM (OR SYSTEM) TO WHICH ECP APPLIES
M261 19-TUBE 2.75 INCH AIRCRAFT ROCKET LAUNCHER

13. DESCRIPTION OF REVISION
THE DRAWING HAS BEEN REVISED AND REDRAWN. THE CLOUDS DEPICT THE AREAS OF CHANGE.

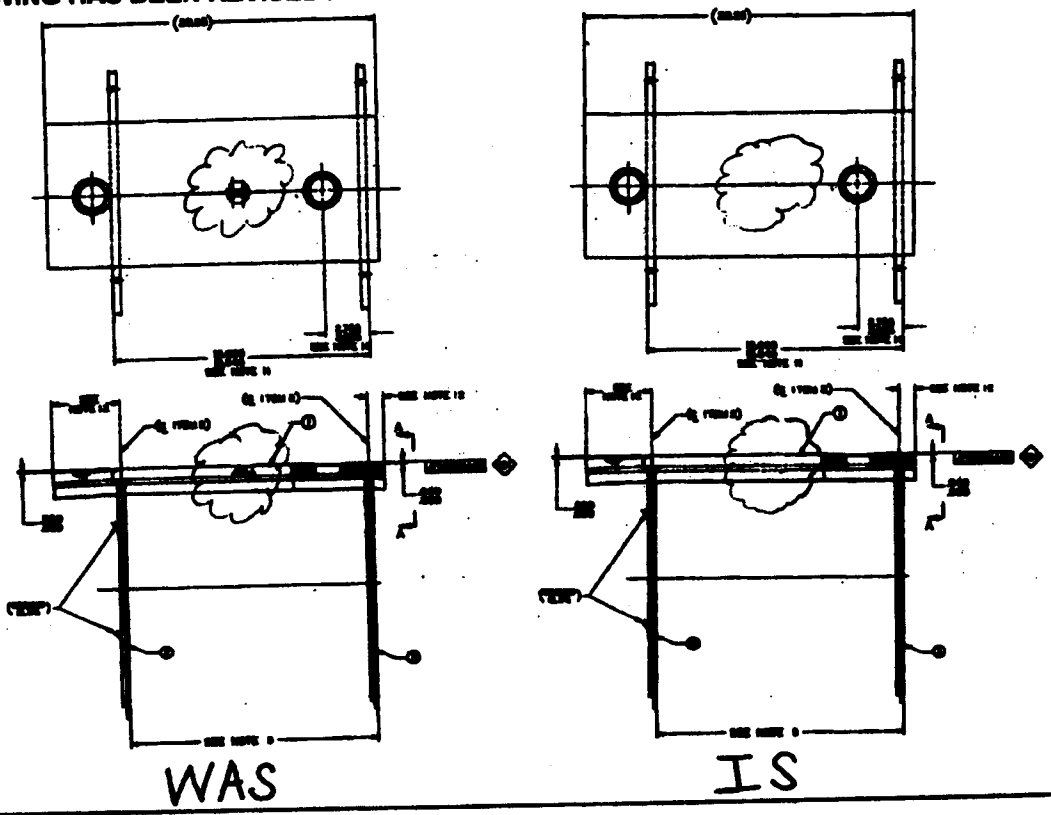

14. THIS SECTION FOR GOVERNMENT USE ONLY
a. (X one)
(1) Existing document supplemented by this NOR may be used in manufacture.
(2) Revised document must be received before manufacturer may incorporate this change.
(3) Custodian of master document shall make above revision and furnish revised document.

b. ACTIVITY AUTHORIZED TO APPROVE CHANGE FOR GOVERNMENT
c. TYPED NAME (First, Middle Initial, Last)
d. TITLE: Ronald E. Elbe, Configuration Manager, Chief, CCAC Production & Field Support Team, AMSTA-AR-CCL-F
e. SIGNATURE: Ronald E Elbe
f. DATE SIGNED (YYYYMMDD): 20010531

15a. ACTIVITY ACCOMPLISHING REVISION
b. REVISION COMPLETED (SIGNATURE)
c. DATE SIGNED (YYYYMMDD)

DD FORM 1695, AUG 96 (EG) PREVIOUS EDITION MAY BE USE

DISTRIBUTION STATEMENT A. APPROVED FOR PUBLIC RELEASE. DISTRIBUTION IS UNLIMITED.

NOTICE OF REVISION (NOR)
THIS REVISION DESCRIBED BELOW HAS BEEN AUTHORIZED FOR THE DOCUMENT LISTED

1. DATE (YYYYMMDD): 2001/05/14

Form Approved
OMB No. 0704-0188

The public reporting burden for this collection of information is estimated to average 2 hours per response, including the time for reviewing instructions, searching existing data sources, gathering and maintaining the data needed, and completing and reviewing the collection of information. Send comments regarding this burden estimate or any other aspect of this collection of information, including suggestions for reducing this burden, to Department of Defense, Washington Headquarters Services, Directorate for Information Operations and Reports (0704-0188), 1215 Jefferson Davis Highway, Suite 1204, Arlington, VA 22202-4302. Respondents should be aware that notwithstanding any other provision of law, no person shall be subject to any penalty for failing to comply with a collection of information if it does not display a currently valid OMB control number.
PLEASE DO NOT RETURN YOUR COMPLETED FORM TO THIS ADDRESS. RETURN COMPLETED FORM TO THE GOVERNMENT ISSUING CONTRACTING OFFICER FOR THE CONTRACT/PROCURING ACTIVITY NUMBER LISTED IN ITEM 2 OF THIS FORM.

2. PROCURING ACTIVITY NO.: R1R3006

3. DODAAC:

4. ORIGINATOR
a. TYPED NAME (First, Middle Initial, Last): Donald E. Davis

b. ADDRESS (Street, City, State, Zip Code):
Commander
U.S. ARMY AVIATION AND MISSILE COMMAND
ATTN: AMSAM-RD-PS-SA
REDSTONE ARSENAL, AL 35898

5. CAGE CODE: 18876

6. NOR NO.: 16/R1R3006.16

7. CAGE CODE: 18876

8. DOCUMENT NO.: 13048849

9. TITLE OF DOCUMENT: LAUNCHER SKIN AND SUPPORT

10. REVISION LETTER
a. CURRENT: B
b. NEW: C

11. ECP NO.: MI-M7565

12. CONFIGURATION ITEM (OR SYSTEM) TO WHICH ECP APPLIES
M261 19-TUBE 2.75 INCH AIRCRAFT ROCKET LAUNCHER

13. DESCRIPTION OF REVISION
THE DRAWING HAS BEEN REVISED AND REDRAWN. THE CLOUDS DEPICT THE AREAS OF CHANGE.

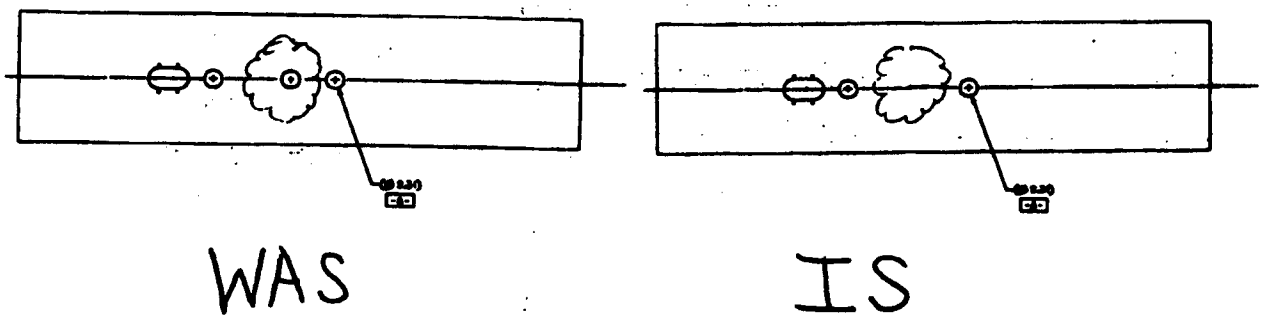

14. THIS SECTION FOR GOVERNMENT USE ONLY

a. (X one)
- [ ] (1) Existing document supplemented by this NOR may be used in manufacture.
- [ ] (2) Revised document must be received before manufacturer may incorporate this change.
- [ ] (3) Custodian of master document shall make above revision and furnish revised document.

b. ACTIVITY AUTHORIZED TO APPROVE CHANGE FOR GOVERNMENT:

c. TYPED NAME (First, Middle Initial, Last):

d. TITLE
Ronald E. Elbe, Configuration Manager
Chief, CCAC Production & Field Support Team
AMSTA-AR-CCL-F

e. SIGNATURE: Ronald E. Elbe

f. DATE SIGNED (YYYYMMDD): 20010531

15.a. ACTIVITY ACCOMPLISHING REVISION:

b. REVISION COMPLETED (SIGNATURE):

c. DATE SIGNED (YYYYMMDD):

DD FORM 1695, AUG 96 (EG) PREVIOUS EDITION MAY BE USE

DISTRIBUTION STATEMENT A. APPROVED FOR PUBLIC RELEASE. DISTRIBUTION IS UNLIMITED.

NOTICE OF REVISION (NOR) THIS REVISION DESCRIBED BELOW HAS BEEN AUTHORIZED FOR THE DOCUMENT LISTED	1. DATE (YYYYMMDD) 2001/05/14	Form Approved OMB No. 0704-0188
The public reporting burden for this collection of information is estimated to average 2 hours per response, including the time for reviewing instructions, searching existing data sources, gathering and maintaining the data needed, and completing and reviewing the collection of information. Send comments regarding this burden estimate or any other aspect of this collection of information, including suggestions for reducing the burden, to Department of Defense, Washington Headquarters Services, Directorate for Information Operations and Reports (0704-0188), 1215 Jefferson Davis Highway, Suite 1204, Arlington, VA 22202-4302. Respondents should be aware that notwithstanding any other provision of law, no person shall be subject to any penalty for failing to comply with a collection of information if it does not display a currently valid OMB control number. PLEASE DO NOT RETURN YOUR COMPLETED FORM TO THIS ADDRESS. RETURN COMPLETED FORM TO THE GOVERNMENT ISSUING CONTRACTING OFFICER FOR THE CONTRACT/PROCURING ACTIVITY NUMBER LISTED IN ITEM 2 OF THIS FORM.		2. PROCURING ACTIVITY NO. R1R3006 3. DODAAC

4. ORIGINATOR			6. NOR NO.
a. TYPED NAME (First, Middle Initial, Last) Donald E. Davis	b. ADDRESS (Street, City, State, Zip Code) Commander U.S. ARMY AVIATION AND MISSILE COMMAND ATTN: AMSAM-RD-PS-GA REDSTONE ARSENAL, AL 35898	5. CAGE CODE 18876 7. CAGE CODE 55717	17/R1R3006.17 8. DOCUMENT NO. 13048850

9. TITLE OF DOCUMENT	10. REVISION LETTER		11. ECP NO.
LAUNCHER, ROCKET, AIRCRAFT: 2.75 INCH, 19-TUBE, M261	a. CURRENT J	b. NEW K	MI-M7565

12. CONFIGURATION ITEM (OR SYSTEM) TO WHICH ECP APPLIES

M261 19-TUBE 2.75 INCH AIRCRAFT ROCKET LAUNCHER

13. DESCRIPTION OF REVISION

THE DRAWING HAS BEEN REVISED AND REDRAWN. THE CLOUDS DEPICT THE AREAS OF CHANGE.

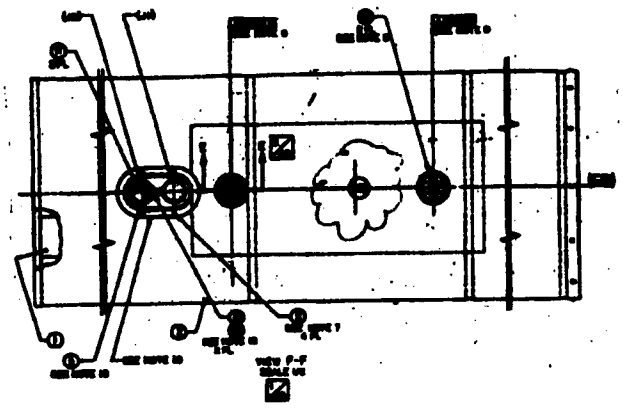

WAS

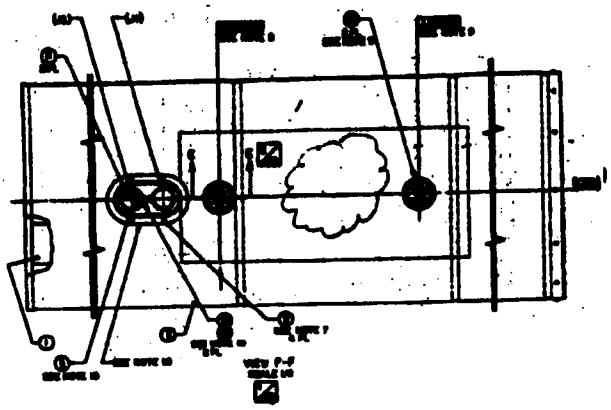

IS

14. THIS SECTION FOR GOVERNMENT USE ONLY

a. (X one)

- [ ] (1) Existing document supplemented by this NOR may be used in manufacture.
- [ ] (2) Revised document must be received before manufacturer may incorporate this change.
- [ ] (3) Custodian of master document shall make above revision and furnish revised document.

b. ACTIVITY AUTHORIZED TO APPROVE CHANGE FOR GOVERNMENT		c. TYPED NAME (First, Middle Initial, Last)
d. TITLE Ronald E. Elba, Configuration Manager Chief, CCAC Production & Field Support Team AMSTA-AR-CCL-F	e. SIGNATURE Ronald E Elba	f. DATE SIGNED (YYYYMMDD) 20010531
15.a. ACTIVITY ACCOMPLISHING REVISION	b. REVISION COMPLETED (SIGNATURE)	c. DATE SIGNED (YYYYMMDD)

DD FORM 1695, AUG 96 (EG) PREVIOUS EDITION MAY BE USE

DISTRIBUTION STATEMENT A. APPROVED FOR PUBLIC RELEASE. DISTRIBUTION IS UNLIMITED.

NOTICE OF REVISION (NOR)
THIS REVISION DESCRIBED BELOW HAS BEEN AUTHORIZED FOR THE DOCUMENT LISTED

1. DATE (YYYYMMDD): 2001/05/14

Form Approved
OMB No. 0704-0188

The public reporting burden for this collection of information is estimated to average 2 hours per response, including the time for reviewing instructions, searching existing data sources, gathering and maintaining the data needed, and completing and reviewing the collection of information. Send comments regarding this burden estimate or any other aspect of this collection of information, including suggestions for reducing the burden, to Department of Defense, Washington Headquarters Services, Directorate for Information Operations and Reports (0704-0188), 1215 Jefferson Davis Highway, Suite 1204, Arlington, VA 22202-4302. Respondents should be aware that notwithstanding any other provision of law, no person shall be subject to any penalty for failing to comply with a collection of information if it does not display a currently valid OMB control number.
PLEASE DO NOT RETURN YOUR COMPLETED FORM TO THIS ADDRESS. RETURN COMPLETED FORM TO THE GOVERNMENT ISSUING CONTRACTING OFFICER FOR THE CONTRACT/PROCURING ACTIVITY NUMBER LISTED IN ITEM 2 OF THIS FORM.

2. PROCURING ACTIVITY NO.: R1R3006

3. DODAAC:

4. ORIGINATOR
a. TYPED NAME (First, Middle Initial, Last): Donald E. Davis
b. ADDRESS (Street, City, State, Zip Code): Commander, U.S. ARMY AVIATION AND MISSILE COMMAND, ATTN: AMSAM-RD-PS-SA, REDSTONE ARSENAL, AL 35898

5. CAGE CODE: 18876

6. NOR NO.: 18/18 R1R3006 18

7. CAGE CODE: 55717

8. DOCUMENT NO.: 13048875

9. TITLE OF DOCUMENT: STRONGBACK, LAUNCHER

10. REVISION LETTER
a. CURRENT: E
b. NEW: F

11. ECP NO.: MI-M7565

12. CONFIGURATION ITEM (OR SYSTEM) TO WHICH ECP APPLIES
M261 19-TUBE 2.75 INCH AIRCRAFT ROCKET LAUNCHER

13. DESCRIPTION OF REVISION
THE DRAWING HAS BEEN REVISED AND REDRAWN ON SHEETS 2 THRU 3. THE CLOUDS DEPICT THE AREAS OF CHANGE.

14. THIS SECTION FOR GOVERNMENT USE ONLY
a. (X one)
- [ ] (1) Existing document supplemented by this NOR may be used in manufacture.
- [ ] (2) Revised document must be received before manufacturer may incorporate this change.
- [ ] (3) Custodian of master document shall make above revision and furnish revised document.

b. ACTIVITY AUTHORIZED TO APPROVE CHANGE FOR GOVERNMENT
c. TYPED NAME (First, Middle Initial, Last)
d. TITLE: Ronald E. Elbe, Configuration Manager, Chief, CCAC Production & Field Support Team, AMSTA-AR-CCL-F
e. SIGNATURE: Ronald E. Elbe
f. DATE SIGNED (YYYYMMDD): 20010531

15.a. ACTIVITY ACCOMPLISHING REVISION
b. REVISION COMPLETED (SIGNATURE)
c. DATE SIGNED (YYYYMMDD)

ECP NO. MI-M7565 NOR 18/18 SHEET 2 OF 3

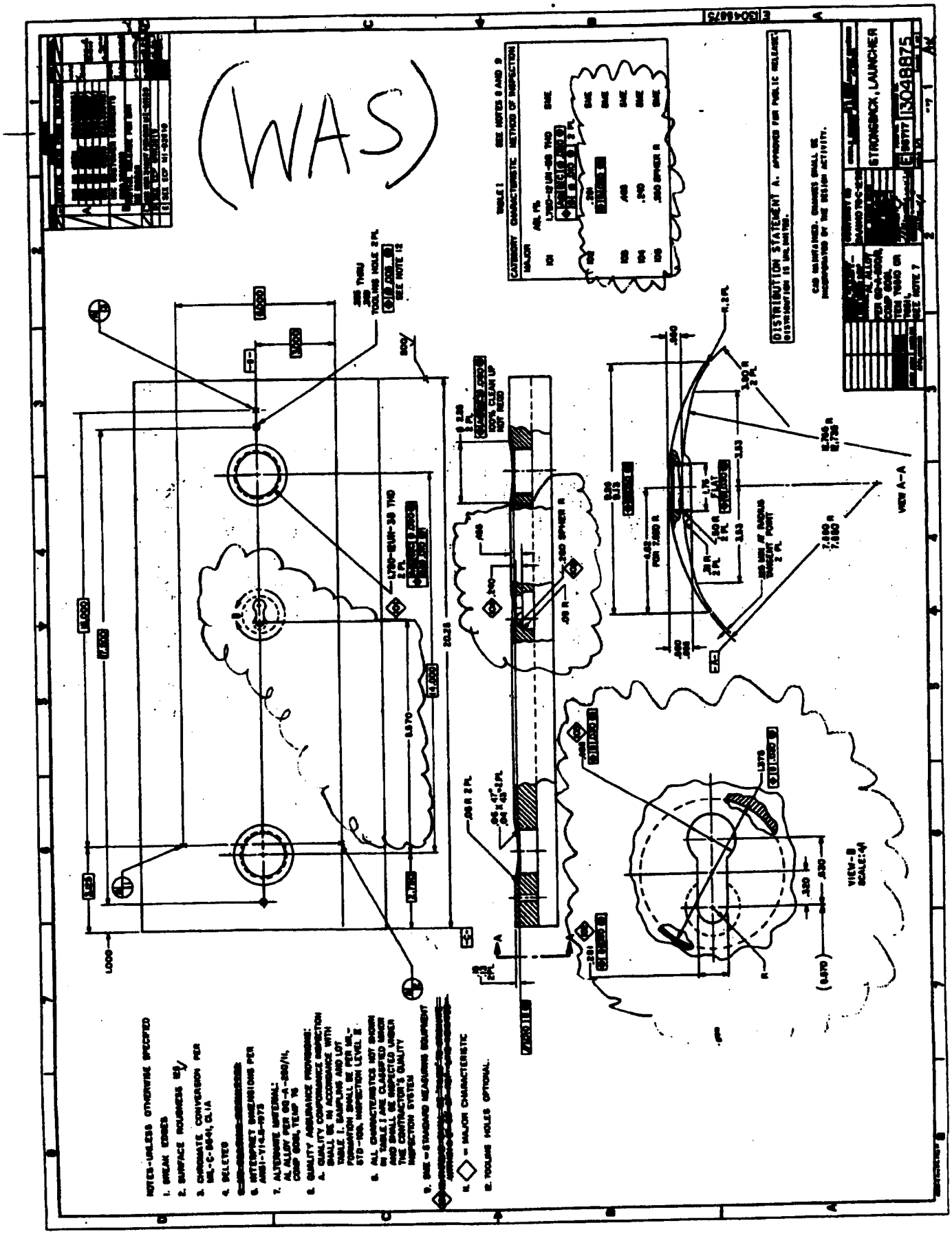

ECP NO. MI-M7565 NOR 18/18 SHEET 3 OF 3.
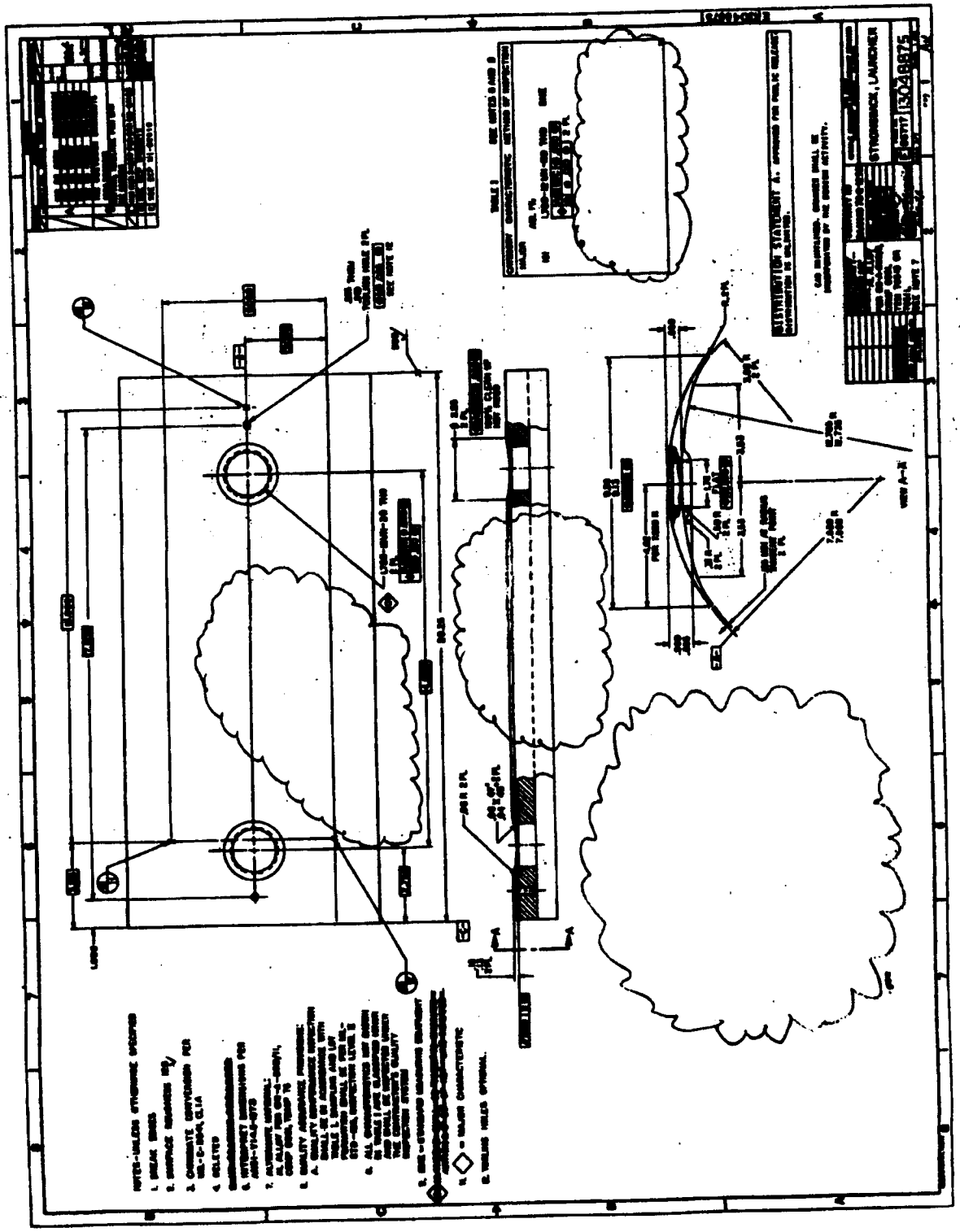
(IS)