CAUTION:—READ ALL NOTES & SPECS; DO NOT SCALE DRAWING
NOTES: 1. CORNERS AND EDGES MUST BE BROKEN AS SPECIFIED IN BLOCK AT BOTTOM OF DRAWING.
2. MANUFACTURER'S FSCM NO., NAME, OR TRADEMARK TO BE PLACED IN MARKING AFTER "MFR."
3. APPLY PHOSPHATE COATING PER DWG A7309999 TO ALL STEEL SURFACES FINISH 1.6 AND ABOVE.
4. WEAR LIMITS APPLY ONLY FOR SURVEILLANCE INSPECTION OF GAGES IN USE AND RECERTIFICATION AFTER USAGE.

MARK DATA IN BLOCK BELOW ON ITEM IN POSITION SHOWN
19206-12520141 -( ) LATEST REV SYMBOL
U.S. INSP
MFR
GUN 120MM
12529710
FUNC STUD & ϕ9 HOLE LCT
COMP MUST SEAT
PC 1 OF 2

REVISIONS					
ZONE	LTR	DESCRIPTION	DATE	APPROVAL
—	A	ORIG DWG — ERR WVQ-38560	—	—
	B	SEE ERR WVQ-78612	871001	CB

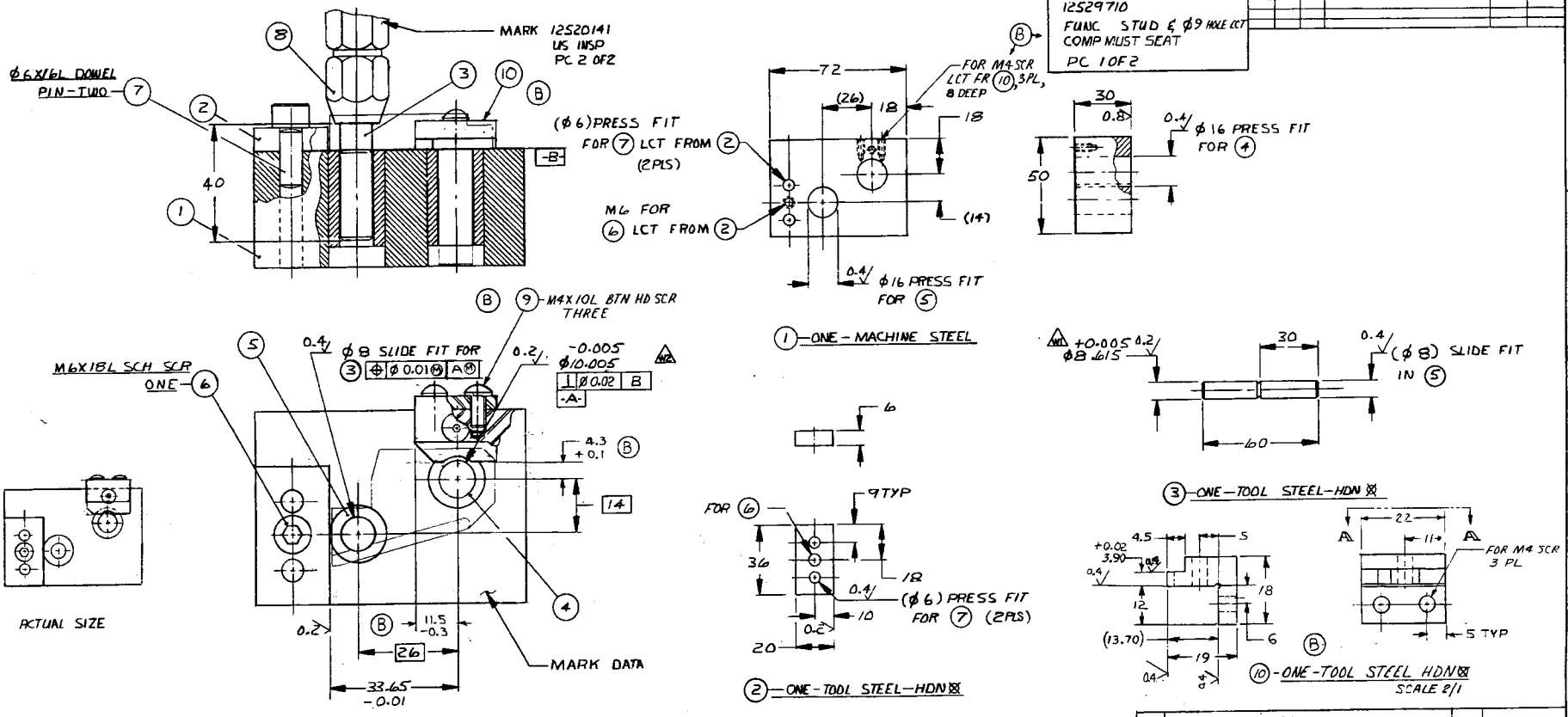

PART NO.	PART NAME & SPECIFICATIONS	NO. REQD	DRAWING NUMBER
8	HANDLE AGD 4W-S	1	
5	DRILL BUSHING ASA P-40-16U-8 ID	1	
4	DRILL BUSHING ASA P-40-16U-10-005 ID	1	
—	PROTECTIVE FINISH	—	A7309999

STANDARD, COMMERCIAL, & AUXILIARY PARTS — DWGS NOTED MUST ACCOMPANY THIS DWG

GENERAL TOLERANCES
UNLESS OTHERWISE SPECIFIED: GRINDING RECESSES 2WX1D MAX
DIMENSIONS ARE IN MILLIMETERS
ANGLES ± 1°
BREAK EDGES 1+0.5
FILLETS 1+0.3
FINISH 1.6

PERMISSIBLE VARIATIONS FOR LENGTH MEASUREMENTS					
0.5 TO 5.999	± 0.3	315.0 TO 999.999	± 0.8
6.0 TO 29.999	± 0.2	1000.0 TO 1999.999	± 1.2
30.0 TO 119.999	± 0.3	2000.0 TO 3999.999	± 2.0
120.0 TO 314.999	± 0.5	4000.0 TO 8000.0	± 3.0

FIRST ANGLE PROJECTION — PER ANSI - Y14.3

SYM	WEAR LIMIT	SYM	WEAR LIMIT
W1	10.01 ϕ		
W2	8.61 ϕ		

REMOVE GAGE FROM USAGE WHEN ANY WEAR LIMIT IS REACHED

APPLICABLE SPECIFICATIONS: SAE/PS, DBL CONTROL-MIL-S-10844 DBL & TOL - ANSI-Y14.5M
MATERIAL—AS NOTED
HARDNESS: ROCKWELL C60-63 OR EQUIVALENT ROCKWELL OR EQUIVALENT ROCK .125N 90 MIN .02 MIN DPTH AFTER GRD

UNLESS OTHERWISE SPECIFIED DIMENSIONS ARE IN INCHES BREAK ALL CORNERS .03 ±.02 BREAK ALL EDGES .03 ±.02 FILLETS .0005 GRINDING RECESSES .250 MAX WIDTH .250 MAX DEPTH FINISH 1.6 TOLERANCES ON FRACTIONS ANGLES DECIMALS .XX± .XXX±

12529710 XM 256
APPLICATION

ORIGINAL DATE OF DRAWING 830531
DRAFTED SHEETER DESIGNED ENGINEER SUBMITTED APPROVED

GAGE, RECEIVER

U.S. ARMY ARMAMENT MATERIEL READINESS COMMAND WATERVLIET ARSENAL WATERVLIET, N.Y. 12189

DWG D 12520141
SCALE 1/1, 2/1 FSCM NO. 19206 SHEET 1 OF 1

Attachment 3

12520141_19206_-_B_0001_User_UN
December 19, 2001 1:23 PM

DOCUMENT SUMMARY LIST

Item: KEEPER ASSEMBLY
NSN: 1015-12-190-7624
Control Number/PRON: M121A267

Identifies all first tier documents (cited in SOW) (applicable DIDs). Also included are all referenced documents (2nd, (includes DID block 10 references), 3rd and lower tier) which have been tailored.

DOCUMENT CATEGORY:

CATEGORY O - Unless otherwise specified in the solicitation, contract, or contract modifications, all documents are for guidance and information only.

CATEGORY 1 - The requirements contained in the directly cited document are contractually applicable to the extent specified. All referenced documents are for guidance and information only.

CATEGORY 2 - The requirements contained in the directly cited document and the reference documents identified in the directly cited document are contractually applicable to the extent specified. All subsequently referenced documents are for guidance and information only.

CATEGORY 3 - Unless otherwise specified in the solicitation, contract or contract modification, all requirements contained in the directly cited document and all reference and subsequently referenced documents are contractually applicable to the extent specified.

Document Number (Contract Reference) Applicable Tailoring	Document Title	Document Date/ Document Category
1a. N/A	Section C titled: Configuration Management Documentation	N/A Cat 2
1b. DI-CMAN-80639C (seq A001)	Engineering Change Proposal (ECP)	30 Sep 00 Cat 1
1c. DI-CMAN-80640C (seq A002)	Request for Deviation (RFD)	30 Sep 00 Cat 1
1d. DI-CMAN-80642C (seq A003)	Notice of Revision (NOR)	30 Sep 00 Cat 1

Attachment 1

2a. NCSL Z540-1 (ES7010)	General Requirements for Calibration Laboratories and Measuring and Test Equipment	30 Aug 94
	OR	
ISO 10012-1 (ES7010)	Quality Assurance Requirements for Measuring Equipment, Part 1: Metrological Confirmation System	1992
2b. DI-QCIC-81006 (DD Form 1423)	Special Inspection Equipment Descriptive Documentation	11 Sep 89 Cat 1
3a. MIL-DTL-16232G (TDPL)	Phosphate Coating Heavy Manganese or Zinc Base	07 Jan 00 Cat 2
3b. DI-NDTI-80603 (DD Form 1423)	Test Procedure	01 Jun 88 Cat 1

Attachment 1

ADDRESS CODE DISTRIBUTION
FOR ECP/RFD/VECP

1. Concurrent distribution of Value Engineering Change Proposals (VECPs), Engineering Change Proposals (ECPs), Request for Deviations (RFDs) shall be submitted by the Contractors as follows:

2. The preferred method of transmission is electronically to ECP-INPUT@RIA.ARMY.MIL (must be under 7MB), (electronic forms (DD Forms 1692, 1693, and 1694)) are available for your use at http://web1.whs.osd.mil/icdhome/ddforms.htm)if hardcopies are submitted, the contractor shall submit copies as required and as identified below to: Director, U.S. Army Armament Research, Development and Engineering Center, ATTN: AMSTA-AR-QAW (ECPs), Rock Island, IL 61299-7300 except for Chemical items (see note below).

a. VECPs -	original plus 3 copies
	original plus 3 copies (Tools & Equipment)
	original plus 3 copies (Navy or Air Force)
b. ECPs -	original plus 2 copies
	original plus 2 copies (Tools & Equipment)
	original plus 2 copies (Navy or Air Force)
c. RFDs-	original plus 2 copies
	original plus 2 copies (Tools & Equipment)
	original plus 2 copies (Navy or Air Force)

NOTE - All Chemical items shall be submitted to: Commander, CBDCOM, ATTN: SCBRD-EN(RI), Rock Island, IL 61299-7410.

a. VECPS - original plus 3 copies
b. ECPs - original plus 2 copies
c. RFDs/RFWs - original plus 1 copy

3. Provide one copy designated 'Advance Copy' to:

a. Contracting Officer: Director, Armament and Chemical Acquisition, and Logistics Activity, Rock Island, IL 61299-8630 (TACOM-RI items) or Commander, Operations Support Command, Rock Island, IL 61299-6000 (OSC items).

b. Administrative Contracting Officer.

4. For VECPs only, provide one copy designated 'Advance Copy' to the Value Engineering Division: Commander, U.S. Army Operations Support Command, ATTN: AMSOS-RMP, Rock Island, IL 61299-6000.

5. When ECPs, NORs, RFDs are determined to be Urgent, Critical and/or Schedule impacting, an action copy shall be provided to AMSTA-AR-QAW via data facsimile (FAX) to 309-782-6450. This transmission is to be immediately followed with the usual hard copy mailing.

Attachment 002

CONTRACT DATA REQUIREMENTS LIST
DD FORM 1423 (MECHANIZED)
CATEGORY: MISC SYSTEM/ITEM: KEEPER ASSEMBLY
TO CONTRACT/PR: M121A267

1. SEQUENCE NUMBER
14. DISTRIBUTION
DRFT/REG/REPRO COPIES
2. TITLE OF DATA ITEM
3. SUBTITLE
4. DATA ITEM NUMBER
5. CONTRACT REFERENCE
6. TECHNICAL OFFICE 7. DD 250 8. APP CODE 9. DIST STATEMENT REQUIRED
10. FREQUENCY 11. AS OF DATE 15. TOTAL:
12. DATE OF 1ST SUBMISSION 13. DATE OF SUBSEQUENT SUBMISSION
16. REMARKS

---

1. A001
2. ENGINEERING CHANGE PROPOSAL (ECP)
3.
4. DI-CMAN-80639C*
5. SECTION C
6. AMSTA-AR-QAW 7. LT 8. - 9. **
10. ASREQ 11. ---
12. ASREQ 13. ASREQ
14. SEE ADDRESS CODE / /
DISTRIBUTION / /
ATTACHED*** / /
15. TOTAL 0/ 0/ 0
16. REMARKS
*DELETE PARAGRAPH 2 OF DID. SEE ATTACHED DATA DELIVERY DESCRIPTION FOR CONTENT OF THE ECP. CONTRACTOR FORMAT IS ACCEPTABLE, DATA MUST BE IN GOVT COMPATIBLE SOFTWARE (I.E., MICROSOFT OFFICE). **DIST STATEMENT WILL BE ASSIGNED AND IMPLEMENTED BY THE DOD CONFIGURATION MGR. ***SUBMIT ELECTRONICALLY TO ECP-INPUT@RIA.ARMY.MIL. ELECTRONIC FILES MUST BE LESS THAN 7MB. THE FORMS LOCATED AT HTTP://W4.PICA.ARMY.MIL/ARDEC-RI/CMFORM.HTM ARE THE PREFERRED METHOD OF SUBMISSION FOR THIS DATA ITEM. (DD FORMS 1692, 1694 AND 1695)

---

1. A002
2. REQUEST FOR DEVIATION (RFD)
3.
4. DI-CMAN-80640C*
5. SECTION C
6. AMSTA-AR-QAW 7. LT 8. - 9. **
10. ASREQ 11. ---
12. ASREQ 13. ASREQ
14. SEE ADDRESS CODE / /
DISTRIBUTION / /
ATTACHED*** / /
15. TOTAL 0/ 0/ 0
16. REMARKS
*DELETE PARAGRAPH 2 OF DID. SEE ATTACHED DATA DELIVERY DESCRIPTION FOR CONTENT OF RFD. ADEQUATE DATA/ANALYSIS/TESTING TO SUPPORT THE POSITION RELATIVE TO PARAGRAPH 24 AND 25 OF DATA DELIVERY DESCRIPTION SHALL BE INCLUDED. CONTRACTOR FORMAT IS ACCEPTABLE, BUT DATA MUST BE IN GOVT COMPATIBLE SOFTWARE (I.E., MICROSOFT OFFICE). **DISTRIBUTION STATEMENT WILL BE ASSIGNED AND IMPLEMENTED BY THE DOD CONFIG MGR. ***SUBMIT ELECTRONICALLY TO ECP-INPUT@RIA.ARMY.MIL. ELECTRONIC FILES MUST BE LESS THAN 7MB. THE FORMS LOCATED AT HTTP://W4.PICA.AMRY.MIL/ARDEC-RI/CMFORM.HTM ARE THE PREFERRED METHOD OF SUBMISSION FOR THIS DATA ITEM. (DD FORMS 1692, 1694, AND/OR 1695)

Exhibit A

1. A003

2. NOTICE OF REVISION (NOR)
3.

4. DI-CMAN-80642C*

5. SECTION C

6. AMSTA-AR-QAW 7. LT 8. - 9. ***

10. ASREQ 11. ---

12. ASREQ 13. ASREQ

14.
SEE ADDRESS CODE / /
DISTRIBUTION / /
ATTACHED** / /

15. TOTAL 0/ 0/ 0

16. REMARKS
*DELETE PARAGRAPH 2 OF DID. SEE ATTACHED DATA DELIVERY DESCRIPTION FOR CON TENT OF NOR. CONTRACTOR FORMAT IS ACCEPTABLE, DATA MUST BE IN GOVT COMPATIB LE SOFTWARE (I.E., MICROSOFT OFFICE). **SUBMIT ELECTRONICALLY TO ECP-INPUT@ RIA.ARMY.MIL. ELECTRONIC FILES MUST BE LESS THAN 7MB. FORMS LOCATED AT HTT P://W4PICA.ARMY.MIL/ARDEC-RI/CMFORM.HTM ARE THE PREFERRED METHOD OF SUBMISS ION FOR THIS DATA ITEM. ***DISTRIBUTION STATEMENT WILL BE ASSIGNED AND IMPL EMENTED BY THE DOD CONFIGURATION MANAGER.
The data delivery descriptions are available on the attached tacom-ri intranet site:
https://aais.ria.army.mil/aais/SOLINFO/Standard_Attachments/Index%20of%20Attachme nts.html

---

1. A004

2. SPECIAL INSPECTION EQUIPMENT DESCRIPTIVE DOC.
3. AIE DESIGN DOCUMENTATION

4. DI-QCIC-81006*

5. SECTION E

6. AMSTA-AR-QA 7. XX 8. A 9. N/A

10. ONE/R 11.N/A

12. ** 13.WHEN REV.

14.
AMSTA-AR-QAT-T (1) / 1/
(D) / /
QAR / /
CO (LT ONLY) / /
AMSTA-AR-QAW-C (2) / /
(LT ONLY) (R) / /

15. TOTAL 0/ 1/ 0

16. REMARKS
* BLOCK 4: DO NOT ADDRESS PARAGRAPHS 10.1, 10.2, 10.4.1(f) AND 10.4.2. IGNORE ALL REFERENCE TO THE WORD "SPECIAL" IN DID. SUBMIT FOR ALL CRITICAL, SPECIAL AND MAJOR CHARACTERISTICS IN SPECIFICATION OR QAP.** BLOCK 12: SUBMIT 30 DAYS PRIOR TO FA,OR PRODUCTION,IF FA IS WAIVED. THE GOVERNMENT WILL RESPOND WITHIN 30 DAYS OF RECEIPT OF ORIGINALS AND REVISIONS.REVISIONS ARE TO BE SUBMITTED WITHIN 10 DAYS OF RECEIPT OF GOVERNMENT RESPONSE.IF DOCUMENTATION WAS APPROVED ON PRIOR CONTRACT AND NO CHANGES WERE MADE,SUBMIT ONLY EVIDENCE OF PRIOR APPROVALS.
email: (1)aie-qat@pica.army.mil (2)amsta-ar-qa-cdrl@ria-emh2.army.mil
Text:Microsoft Office 97
Drawings:AutoCAD-Release 14(Expressed mailed hard copies will be accepted)
Files may be compressed using ZIP program.
WARNING: Large packages may cause delays in delivery using mail internet.
Email subject line must contain end item nomenclature.

Exhibit A

1. A005

2. TEST PROCEDURE/ PHOSPHATE COATING PRE-
3. PRODUCTION PROCEDURE

4. DI-NDTI-80603*

5. MIL-DTL-16232,PARA 3.1

6. AMSTA-AR-WEP-RM 7. XX 8. A 9. N/A

10. ONE/R 11. N/A

12. 60 DAC 13. N/A

14.

PROCUREMENT	/ /
CONTRACTING	/ /
OFFICER	/ 1/

15. TOTAL 0/ 1/ 0

16. REMARKS
BLOCK 8 CONT.-PRIOR TO PRODUCTION, APPROVAL THROUGH THE CONTRACTING OFFICER IS REQUIRED WITHIN 60 DAYS AFTER CONTRACT AWARD. A DD FORM 250 IS NOT REQUIRED FOR PHOSPHATE COATING PROCEDURE APPROVAL. CONTRACTOR FORMAT ACCEPTABLE. SHALL BE SUBMITTED ON AN IBM COMPATIBLE 3-1/2" DISKETTE IN RICH TEXT FORMAT (RTF).

APPROVED BY: STEPHEN J HANSEN, SDMO, AMSTA-AR-QAC DATE: 11/21/2001