REVISION			
LTR	DESCRIPTION	DATE	APPROVED
-	PRODUCT BASELINE	02-??-??	

NOTES:

1. THIS DRAWING SHALL BE INTERPRETED IN ACCORDANCE WITH APPLICABLE STANDARDS LISTED IN DOD-STD-100. ASME Y14.5 DATED 1994 APPLIES.
2. THE REQUIRED FINISH AT THE FLANGE SURFACE IS 125 MICROINCHES MAXIMUM. THE GROOVE SURFACE, BOTH SIDES AND BOTTOM IS 32 MICROINCHES MAXIMUM.
3. BREAK THESE CORNERS APPROXIMATELY 0.005 RADIUS.
4. MATERIAL: STAINLESS STEEL PLATE, 304SS, PER ASTM A240. HOT ROLLED, ANNEALED , AND PICKLED. FSC 9515.
5. WIDTH MEASURED NEAR BOTTOM OF GROOVE ABOVE RADIUS.

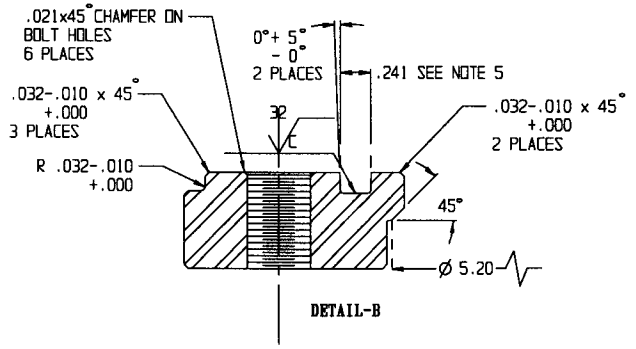

DETAIL-B

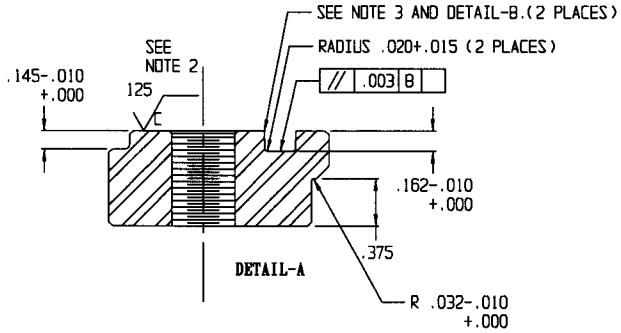

DETAIL-A

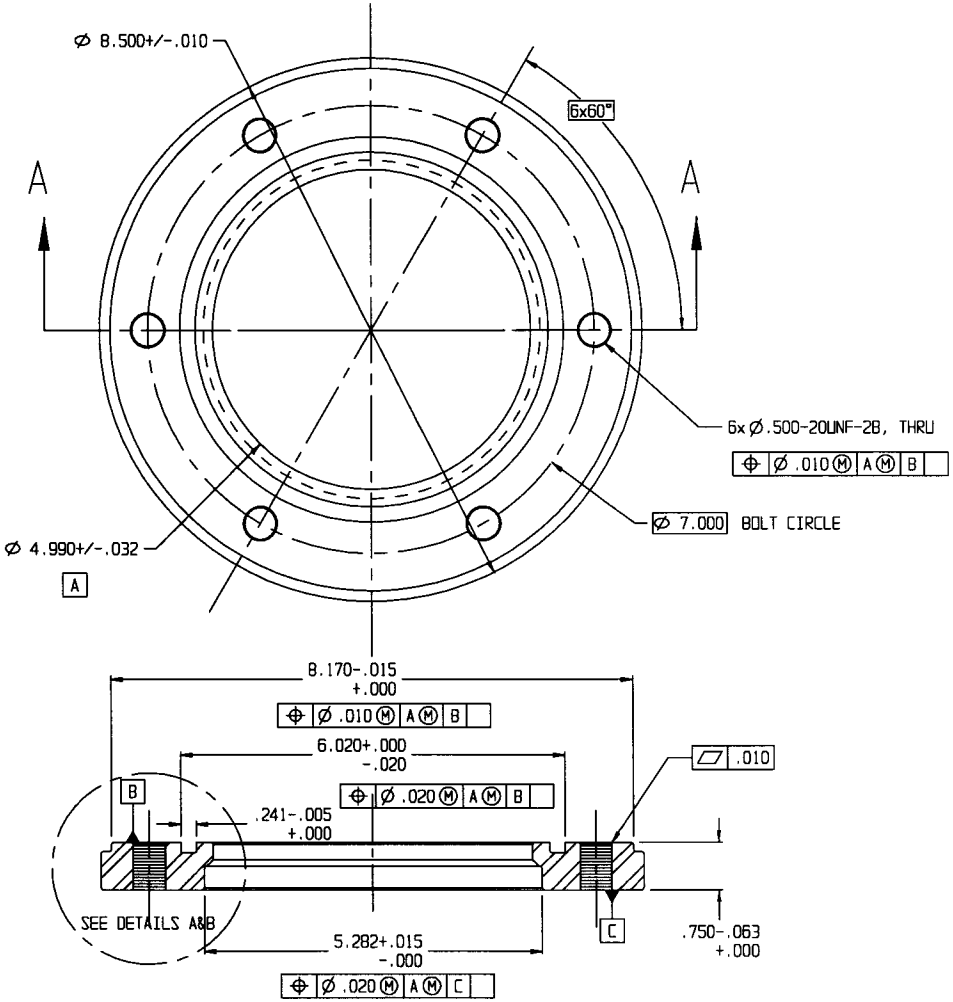

SECTION A-A

*

DISTRIBUTION STATEMENT A.

APPROVED FOR PUBLIC RELEASE; DISTRIBUTION IS UNLIMITED.

UNLESS OTHERWISE NOTED DIMENSIONS ARE IN INCHES. BREAK SHARP CORNERS AND EDGES.
TOLERANCES ON
FRACTIONS ±
DECIMALS ±.032

????????	
????????	
NEXT ASSY	USED ON
APPLICATION	

DATE 02-??-??

DFTSMN	CHECKER	PROJ ENGR
NLB	eee	BONAVITO

TEST ENGINEER
SUBMITTED
CHIEF, MUNITIONS TEAM
APPROVED BY:
CHIEF, ENGINEERING MANAGEMENT OFFICE

DESIGN ACTIVITY
U.S. ARMY
SOLDIER BIOLOGICAL & CHEMICAL COMMAND
ROCK ISLAND ARSENAL
ROCK ISLAND, ILLINOIS 61299

FLANGE FOR 5x25 INCH MULTIPLE ROUND CONTAINER

SIZE	CAGE CODE	
D	81361	M525005

SCALE #/# | UNIT WT | SHEET 1 OF 1