REVISION			
LTR	DESCRIPTION	DATE	APPROVED
-	PRODUCT BASELINE	02-??-??	

NOTES:

1. THIS DRAWING SHALL BE INTERPRETED IN ACCORDANCE WITH APPLICABLE STANDARDDS LISTED IN DOD-STD-100. ASME Y14.5 DATED 1994 APPLIES.
2. SURFACE FINISH ON BOTTOM SIDE TO BE:

   32 MICROINCHES MAXIMUM IN O-RING CONTACT AREA (4.5 TO 6.3 DIA.) 125 MICROINCHES MAXIMUM AT OTHER FLANGE COVER SURFACES.
3. MATERIAL: STAINLESS STEEL PLATE, 304SS, PER ASTM A240, HOT ROLLED, ANNEALED, AND PICKLED. FSC 9515.

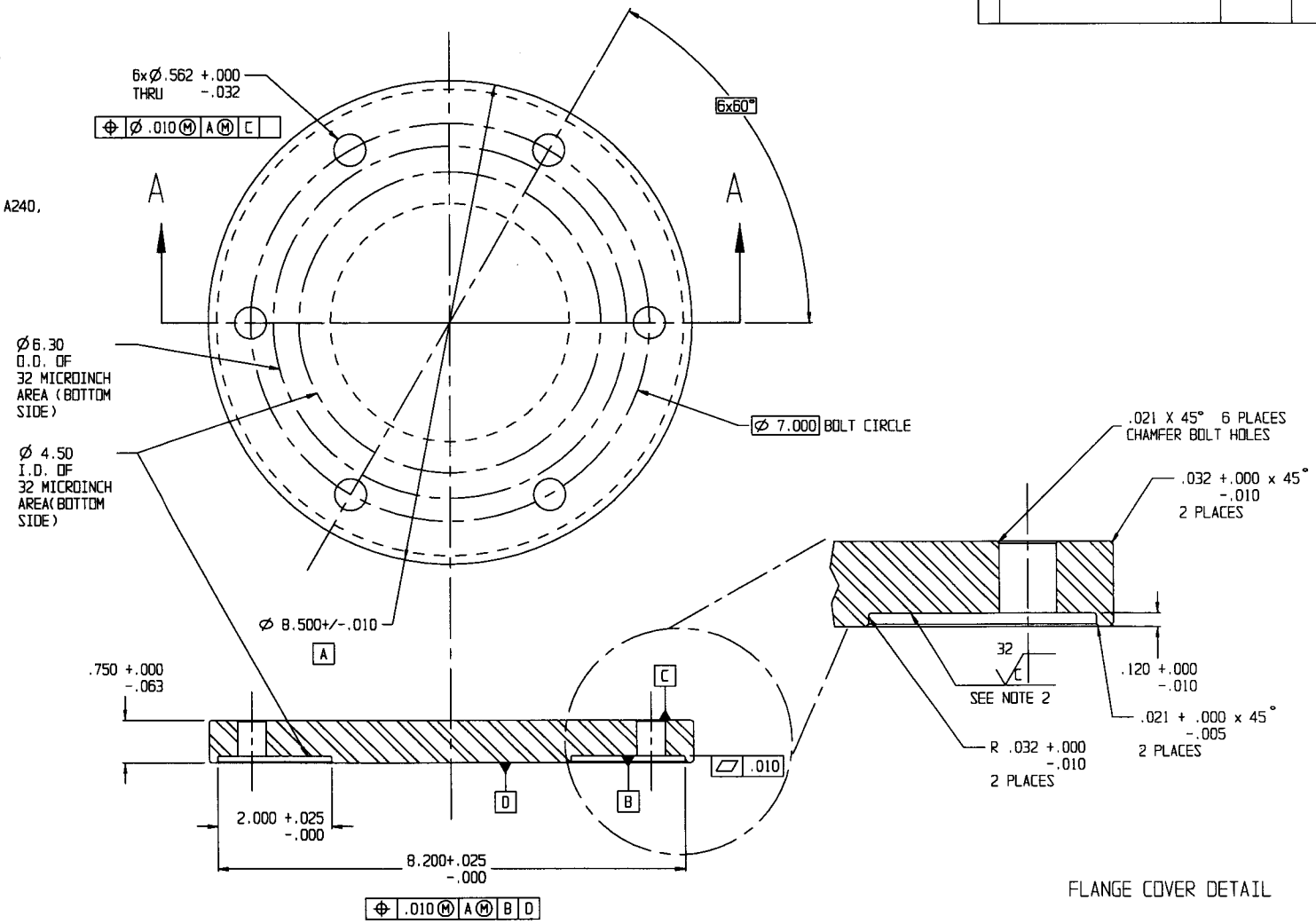

SECTION A-A

FLANGE COVER DETAIL

DISTRIBUTION STATEMENT A.

APPROVED FOR PUBLIC RELEASE; DISTRIBUTION IS UNLIMITED.

UNLESS OTHERWISE NOTED DIMENSIONS ARE IN INCHES. BREAK SHARP CORNERS AND EDGES. TOLERANCES ON FRACTIONS ± DECIMALS ±.032	DATE 02-??-??	DESIGN ACTIVITY U.S. ARMY SOLDIER BIOLOGICAL & CHEMICAL COMMAND ROCK ISLAND ARSENAL ROCK ISLAND, ILLINOIS 61299	
	DRFTSM NLB / CHECKER eee / FIELD ENGR BONAVITO	FLANGE COVER FOR 5x25 INCH MULTIPLE ROUND CONTAINER	
???????? / ????????	TEST ENGINEER / QA / SUPERVISOR / CHIEF, FUNCTIONS TEAM / APPROVED BY:	SIZE D / CAGE CODE 81361	M525007
NEXT ASSY / USED ON	CHIEF, ENGINEERING MANAGEMENT OFFICE	SCALE #/# / UNIT WT	SHEET 1 OF 1
APPLICATION			