NOTICE OF REVISION (NOR) THIS REVISION DESCRIBED BELOW HAS BEEN AUTHORIZED FOR THE DOCUMENT LISTED	1. DATE (YYMMDD) 1 12 11	Form Approved OMB No. 0704-0188

Public reporting burden for this collection of information is estimated to average 2 hours per response, including the time for reviewing instructions, searching existing data sources, gathering and maintaining the data needed, and completing and reviewing the collection of information. Send comments regarding this burden estimate or any other aspect of this collection of information, including suggestions for reducing this burden, to Department of Defense, Washington Headquarters Services, Directorate for Information Operations and Reports, 1215 Jefferson Davis Highway, Suite 1204, Arlington VA 22202-4302, and to the Office of Management and Budget. Paperwork Reduction Project (0704-0188). Washington DC 20503. PLEASE DO NOT RETURN YOUR COMPLETED FORM TO EITHER OF THESE ADDRESSES. RETURN COMPLETED FORM TO THE GOVERNMENT ISSUING CONTRACTING OFFICER FOR THE CONTRACT/PROCURING ACTIVITY NUMBER LISTED IN ITEM 2 OF THIS FORM.

2. PROCURING ACTIVITY NO.	L1A2091
3. DODAAC	

4. ORIGINATOR		5. CAGE CODE	6. NOR NO.
a. TYPED NAME (First, Middle Initial, Last) Andrew Pogozelski	b. ADDRESS (Street, City, State, Zip Code) U.S. Army, ARDEC AMSTA-AR-FSA-T Picatinny Arsenal, NJ 07806	19200	9
		7. CAGE CODE 19200	8. DOCUMENT NO. F12909073

9. TITLE OF DOCUMENT	10. REVISION LETTER		11. ECP NO.
PUMP, HYDRAULIC	a. CURRENT C	b. NEW D	L1A2091

12. CONFIGURATION ITEM *(OR SYSTEM)* TO WHICH ECP APPLIES
M198, Howitzer, Towed, 155MM

SHEET 1 OF 3

13. DESCRIPTION OF REVISION

1. Change

From: Drawing NOR SHEET 2 OF 3

To: Drawing NOR SHEET 3 OF 3

2. Update REVISION Block.

14. THIS SECTION FOR GOVERNMENT USE ONLY

a. *(X one)*
- [X] (1) Existing document supplemented by this NOR may be used in manufacture.
- [ ] (2) Revised document must be received before manufacturer may incorporate this change.
- [ ] (3) Custodian of master document shall make above revision and furnish revised document.

b. ACTIVITY AUTHORIZED TO APPROVE CHANGE FOR GOVERNMENT	c. TYPED NAME (First, Middle Initial, Last)	
TACOM-ARDEC, AMSTA-AR-FSA-R		
d. TITLE ARTHUR J. HEYDERMAN Chief, FSAC Prod & Log Eng Spt Team	e. SIGNATURE	f. DATE SIGNED (YYMMDD) 20020314
15.a. ACTIVITY ACCOMPLISHING REVISION ARDEC, AMSTA-AR-FSA-T	b. REVISION COMPLETED (Signature)	c. DATE SIGNED (YYMMDD)

DD FORM 1695, APR 92 *(EF-V1)* *(PerFORM PRO)* PREVIOUS EDITIONS ARE OBSOLETE.

DISTRIBUTION STATEMENT A, UNLIMITED

DRAWING SIZE F

REVISIONS			
SYM	DESCRIPTION	DATE	APPROVED
A	REDRAWN WITH CHANGE CAR ENGINEER (EOP CHANGE EO404)	890608	
B	NOR LOA2092 94-02-02	940510	
C	NOR LOA2002/000322	000501	BAC

NOTES:

1 - APPLICABLE STANDARDS/SPECIFICATIONS:
  A DOD-STD-00100D (AR)
  B ANSI Y14.5M-1982

2 - REQUIREMENTS:
  A - PUMP SHALL MEET THE REQUIREMENTS OF THIS DRAWING AND OTHERWISE SHALL CONFORM TO AN 6248-3 AND SPEC MIL-P-5515.
  B - OPERATION AT -50F AND +160F IS ESSENTIAL USING MIL-H-6083 HYDR. FLUID.
  C - PUMP BODY MUST BE MADE FROM ALLOY STEEL, HARNESS RC22-30.
  D - PIN SHALL BE MADE FROM ALLOY STEEL, PER MS20392-3C33.
  E - BUSHING SHALL BE MADE FROM STAINLESS STEEL, RC 35-40.
  F - PIVOT ARM SHALL BE FORGED OR EXTRUDED FROM ALUMINUM ALLOY, CMPSN 2014-T6, 2024-T8, OR 7075-T73. MINIMUM YIELD STRENGTH 55 KSI.
  G - THE PUMPS SHALL WITHSTAND 10,000 CYCLES AT SPECIFIED CONDITIONS WITHOUT SERVICING.
  H - COLD PRIMING AND COLD SOAK TEST AT NOT LESS THAN -50F.
  I - COLD CYCLING OPERATION WITH THE PUMP AND FLUID HELD AT -40F TO -50F.

3 - INDICATES PIVOT POINTS.

5 - ITEM IDENTIFICATION: METAL STAMP THE FOLLOWING MARKINGS IN ACCORDANCE WITH MIL STD 130.
  "19200 - 12909073"
  MFR [ ] [ ]
  MANUFACTURER'S CAGE CODE PART NO.

7 - QAP 12909073 APPLIES.

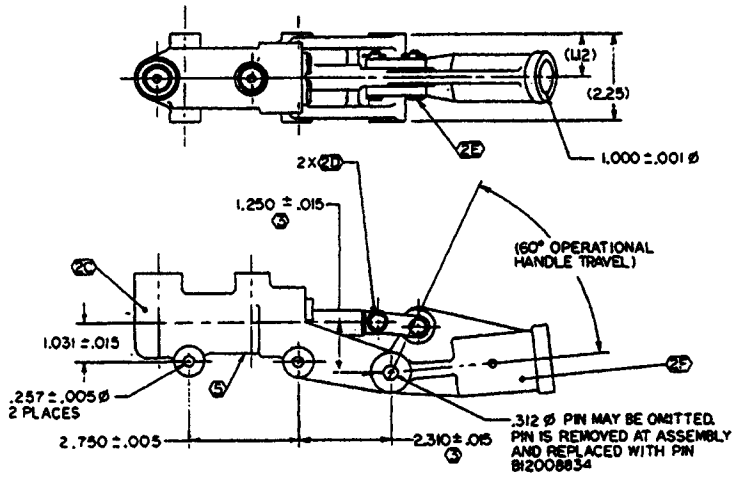

SHEET 2 OF 3
NOR LIA2091, NO. 9
DATED 011211

DISTRIBUTION STATEMENT A
APPROVED FOR PUBLIC RELEASE
DISTRIBUTION IS UNLIMITED

SPECIFICATION CONTROL DRAWING

PART NO. 12909073

DO NOT SCALE DRAWING

890203

PUMP HYDRAULIC

F 19200 12909073

APPLICATION

SMCAR FORM 69, 1 JUL 87(TEMP) REPLACES SMCAR FORM 69, 1 JUN 86(TEMP) WHICH IS OBSOLETE

DRAWING SIZE C

REVISIONS				
ZONE	LTR	DESCRIPTION	DATE (YR MO DAY)	APPROVED

NOTES:

1. APPLICABLE STANDARDS/SPECIFICATIONS:
   A. MIL-STD-100E

2. PUMP SHALL MEET THE REQUIREMENTS OF THIS DRAWING AND OTHERWISE SHALL CONFORM TO AN6248 AND SPEC MIL-P-5515.

3. REQUIREMENTS:
   A – PUMP BODY MADE OF ALLOY STEEL TO HARDNESS RC22 TO RC32.
   B – SOCKET MADE OF ALLOY STEEL TO HARDNESS RC22 TO RC32.
   C – OPERATION AT -50F AND +160F IS ESSENTIAL USING MIL-H-6083 HYDRAULIC FLUID.
   D – THE PUMPS SHALL WITHSTAND 10,000 CYCLES AT SPECIFIED CONDITIONS WITHOUT SERVICING.
   E– COLD PRIMING COLD SOAK TEST AT NOT LESS THAN -50F.
   F – COLD CYCLING OPERATION WITH THE PUMP AND FLUID HELD AT -40F TO -50F.

4. IN ACCORDANCE WITH NASM20392.

5. ONLY THE ITEM DESRIBED ON THIS DRAWING WHEN PROCURED FROM THE VENDOR(S) LISTED HEREON IS APPROVED BY ARDEC PICATINNY ARSENAL, NEW JERSEY 07806-5000 FOR USE IN THE APPLICATION(S) SPECIFIED HEREON. A SUBSTITUTE ITEM SHALL NOT BE USED WITHOUT PRIOR APPROVAL BY ARDEC.

6. IDENTIFICATION OF THE "APPROVED SOURCE(S) OF SUPPLY" HEREON IS NOT TO BE CONSTRUED AS A GUARANTEE OF PRESENT OR CONTINUED AVAILABILITY AS A SOURCE OF SUPPLY FOR THE ITEM(S).

7. ITEM IDENTIFICATION: APPLY THE FOLLOWING MARKING TO CONTAINER IN ACCORDANCE WITH MIL-STD-130.
   "19200 - 12909073"
   "MFR – 59375"

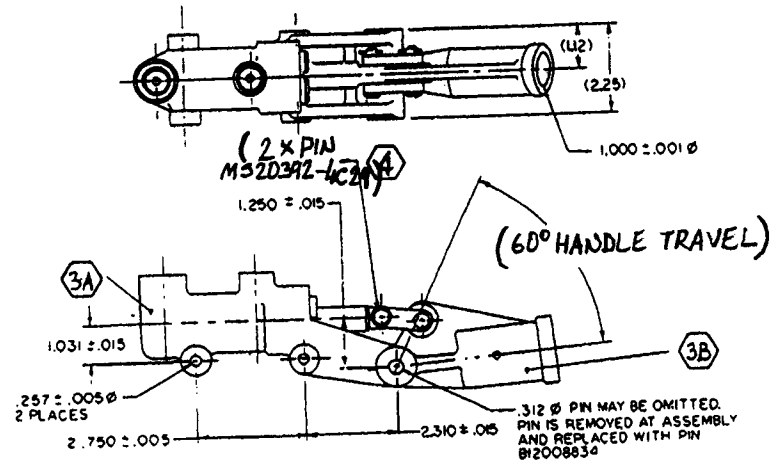

SHEET 3 OF 3
NOR LIA2091, NO.9
DATED 011211

APPROVED SOURCE(S) OF SYPPLY				
PART NO.	VENDOR ADDRESS	VENDOR CAGE CODE	VENDOR PART NO.	ITEM IDENTIFICATION
12909073	RGI INC. 101 E. MAIN STREET LITTLE FALLS, NJ 07424	59375	1979	19200 - 12909073 MFR – 59375 – 1979

SOURCE CONTROL DRAWING

PART NO. 12909073

PMIC A	DO NOT SCALE DRAWING	CONTRACT NUMBER	DESIGN ACTIVITY U.S. ARMY ARMAMENT RESEARCH, DEVELOPMENT AND ENGINEERING CENTER PICATINNY ARSENAL, NEW JERSEY 07806-5000
MECHANICAL PROPERTIES	UNLESS OTHERWISE SPECIFIED DIMENSIONS ARE IN INCHES TOLERANCES ON DECIMAL 2 PL ± 3 PL ± FRACTION ±	CONTRACTOR	PUMP, HYDRAULIC
YP, YS, EL2, RA, BH, RH	THIRD ANGLE PROJECTION	DRAWN BY / DATE (YR-MO-DAY) / CHECKER / ENGINEER / DRAWING APPROVAL	SIZE F / CAGE CODE 19200 / 12909073
NEXT ASSY / USED ON / APPLICATION	MATL ENGR	DESIGN APPROVAL	SCALE 1/1 / UNIT WT. / SHEET

DISTRIBUTION STATEMENT A.
APPROVED FOR PUBLIC RELEASE:
DISTRIBUTION IS UNLIMITED

SMCAR FORM 67, 1 DEC 87(TEMP), REPLACES SMCAR FORM 67, 1 MAR 87(TEMP), WHICH MAY BE USED UNTIL EXHAUSTED