ZONE	LTR	DESCRIPTION	DATE	APPROVED
-	-	ORIGINAL DRAWING PER LCMC	15-10-31	LCMC

CAD MAINTAINED. CHANGES SHALL BE INCORPORATED BY THE DESIGN ACTIVITY.

NOTES:

1. APPLICABLE STANDARDS/SPECIFICATIONS
   A MIL-STD-100
   B ANSI Y14.5M-1982
2. MATERIAL: (32) .187 DIA POP-RIVETS PER 04A044107-1, (6) POP-RIVETS PER 04A044107-4.
3. FINISH: REMOVE ALL SHARP EDGES AND TRIM ALL LOOSE ENDS.

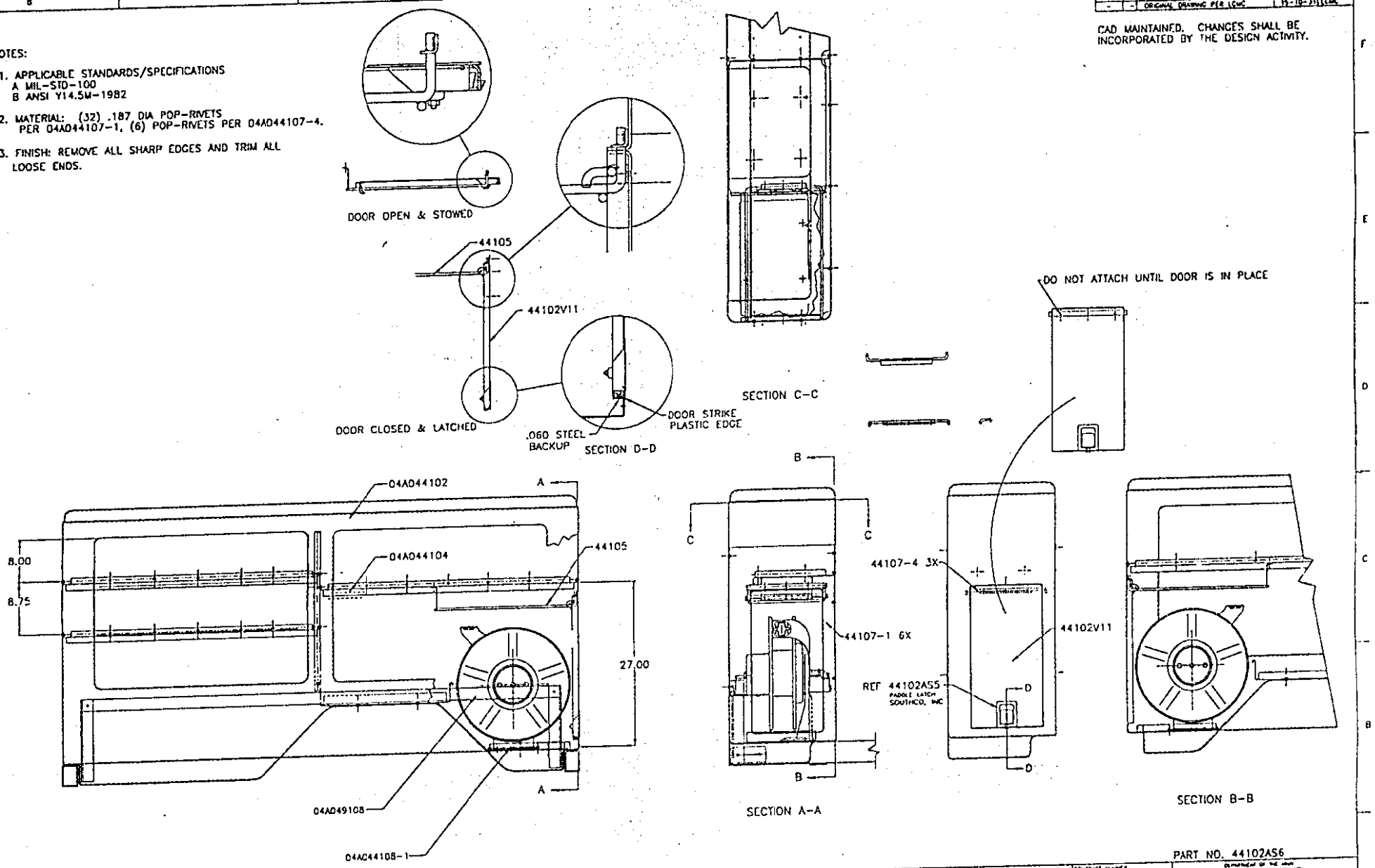

PART NO. 44102AS6

PMIC	DO NOT SCALE DRAWING	CONTRACT NUMBER	DEPARTMENT OF THE ARMY U.S. ARMY ARMAMENT RESEARCH, DEVELOPMENT AND ENGINEERING CENTER RUCK BLAND, ALBANY 61200-7200
MECHANICAL PROPERTIES	UNLESS OTHERWISE SPECIFIED, DIMENSIONS ARE IN INCHES TOLERANCES ON DECIMAL FRACTION	CONTRACTOR	REAR DOOR ASSEMBLY L.H. SHOWN, R.H. OPPOSITE
	THIRD ANGLE PROJECTION	DRAWN BY L.C.MCFARLAND 97-01-23	
44102	TMWSS	CHECKER ENGINEER	SIZE F CAGE CODE 59678 44102AS6
NEXT ASSY	USED ON	DRAWING APPROVAL STEVE MARRIOTT	SCALE DO NOT UNIT WT SHEET
APPLICATION		DESIGN APPROVAL BOB RIEDL	

DISTRIBUTION STATEMENT A. APPROVED FOR PUBLIC RELEASE; DISTRIBUTION IS UNLIMITED.

REVISIONS				
ZONE	LTR	DESCRIPTION	DATE (YR-MO-DA)	APPROVED

CAD MAINTAINED. CHANGES SHALL BE INCORPORATED BY THE DESIGN ACTIVITY.

NOTES:

1. APPLICABLE STANDARDS/SPECIFICATIONS
   A MIL-STD-100
   B ANSI Y14.5M-1982

2. MATERIAL: 6061 ALUMINUM OF THE FOLLOWING SIZES:
   BAR 3/8" X 3" X 80" (2 PCS - DETAIL 1)
   ANGLE 2" X 2" X 1/4" X 15-1/2" LG (4 PCS - DETAIL 2)
   BAR 1/4" X 2" X 12" LG (4 PCS - DETAIL 3)
   PLUS,
   GRADE 2 BOLTS, 3/8" DIA. LENGTH TO SUIT ASSY

3. FINISH: NONE

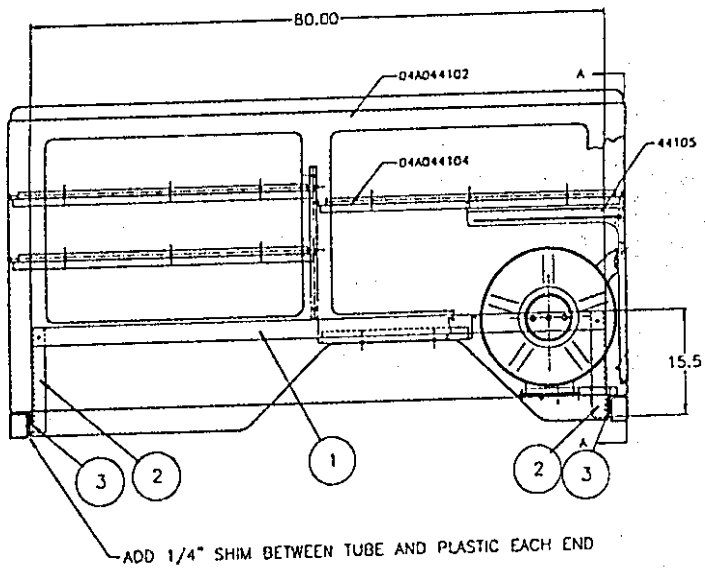

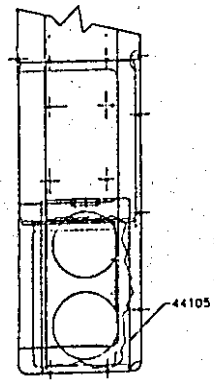

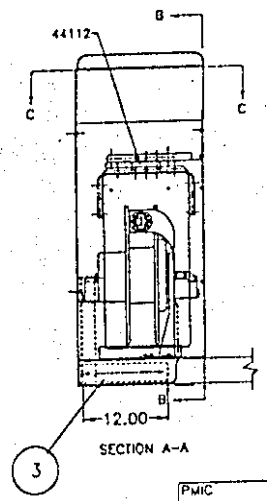

SECTION A-A

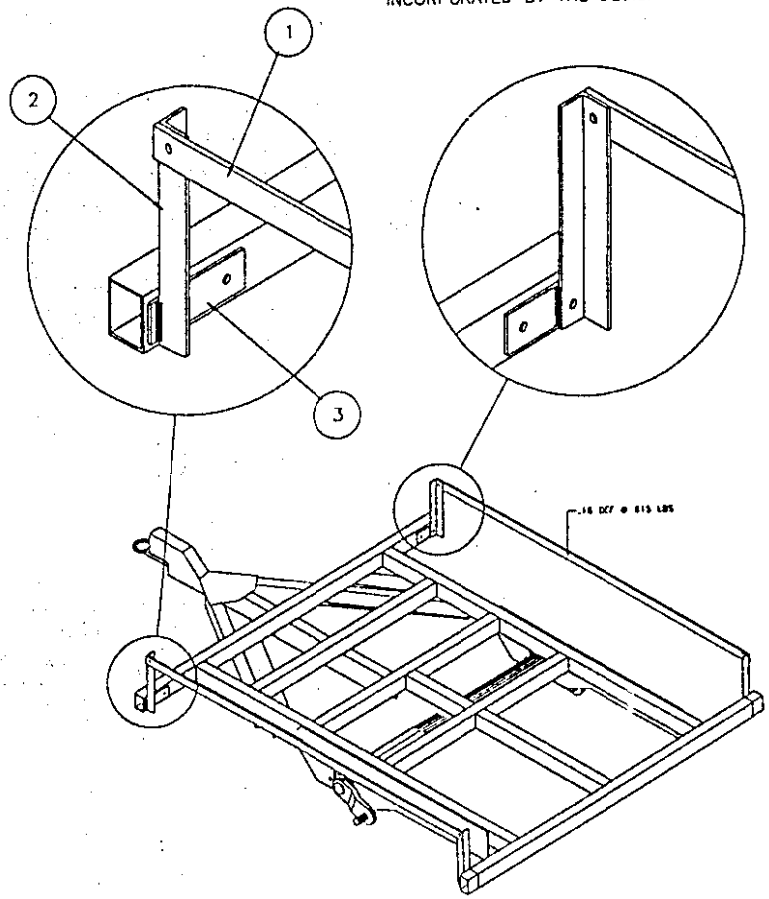

PART NO. 44102AS7

PMIC		DO NOT SCALE DRAWING	CONTRACT NUMBER
MECHANICAL PROPERTIES		UNLESS OTHERWISE SPECIFIED: DIMENSIONS ARE IN INCHES TOLERANCES ON DECIMAL 2 PL .64 3 PL .005 FRACTION ±	CONTRACTOR
		THIRD ANGLE PROJECTION	DRAWN BY L C MCFARLAND 87-04-31
	TIMSS 44102	MATL ENGR	CHECKER / ENGINEER
	NEXT ASSY / USED ON		DRAWING APPROVAL BOB BATES
	APPLICATION		DESIGN APPROVAL STEVE MARRIOTT

DEPARTMENT OF THE ARMY
U.S. ARMY ARMAMENT RESEARCH, DEVELOPMENT AND ENGINEERING CENTER
ROCK ISLAND, ILLINOIS 61299-7300

SPAN BRACE L. H. & R. H.

SIZE	CAGE CODE	
D	59678	44102AS7

SCALE | UNIT WT. | SHEET

DISTRIBUTION STATEMENT A. APPROVED FOR PUBLIC RELEASE; DISTRIBUTION IS UNLIMITED.

ZONE	LTR	DESCRIPTION	DATE	APPROVED
-	-	ORIGINAL DRAWING PER LCMC	95-10-31	LCMC

CAD MAINTAINED. CHANGES SHALL BE INCORPORATED BY THE DESIGN ACTIVITY.

NOTES:

1. APPLICABLE STANDARDS/SPECIFICATIONS
   A MIL-STD-100
   B ANSI Y14.5M-1982
2. MATERIAL: ALUMINUM 6061 PLATE 28 X 34 X .125 THK (2 PCS REQ'D FOR L. H. & R. H.)
3. FINISH: REMOVE ALL SHARP EDGES AND TRIM ALL LOOSE ENDS.

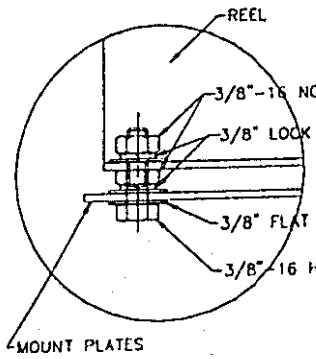

DOUBLE NUT REEL ASSY

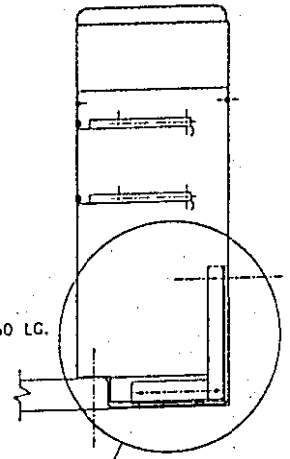

SECTION A-A

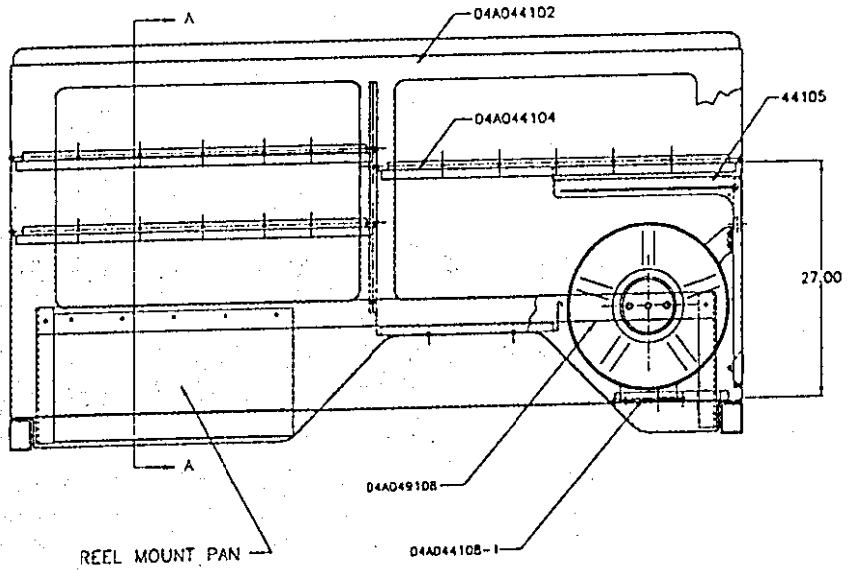

REEL MOUNT PAN

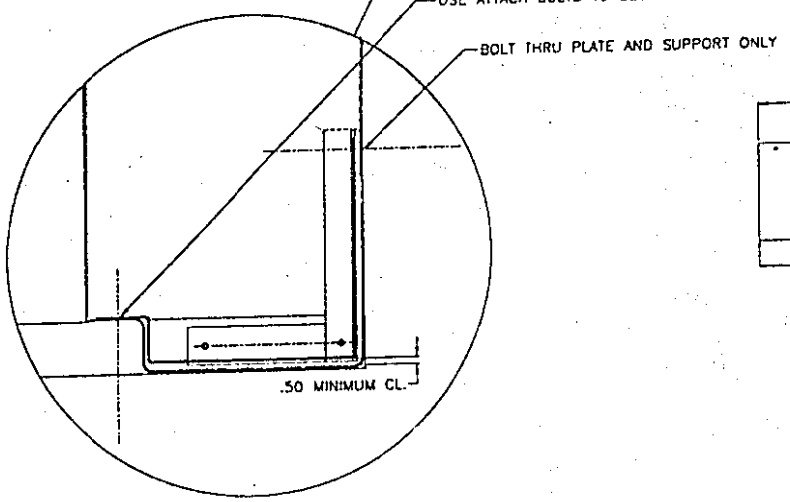

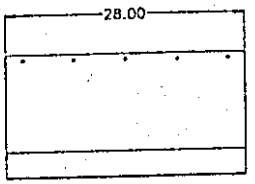

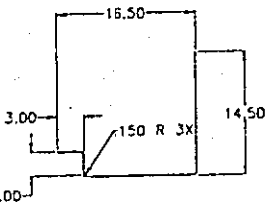

PART NO. 44102AS8

PMIC		DO NOT SCALE DRAWING	CONTRACT NUMBER
MECHANICAL PROPERTIES		UNLESS OTHERWISE SPECIFIED DIMENSIONS ARE IN INCHES TOLERANCES ON DECIMAL FRACTION	CONTRACTOR
		THIRD ANGLE PROJECTION	DRAWN BY L.C.McFARLAND 97-01-23
	44102	TMWSS	CHECKER / ENGINEER
	NEXT ASSY	USED ON	DRAWING APPROVAL STEVE MARRIOTT
	APPLICATION		DESIGN APPROVAL BOB RIEDL

REEL MOUNT PAN
L.H. SHOWN, R.H. OPPOSITE

SIZE	CAGE CODE	
F	59678	44102AS8
SCALE DO NOT	UNIT WT.	SHEET

DISTRIBUTION STATEMENT A. APPROVED FOR PUBLIC RELEASE; DISTRIBUTION IS UNLIMITED.

ZONE	LTR	DESCRIPTION	DATE	APPROVED
-	-	ORIGINAL DRAWING PER LCMC	95-10-31	LCMC

CAD MAINTAINED. CHANGES SHALL BE INCORPORATED BY THE DESIGN ACTIVITY.

NOTES:

1. APPLICABLE STANDARDS/SPECIFICATIONS
   A MIL-STD-100
   B ANSI Y14.5M-1982
2. MATERIAL: ALUMINUM 6061 PLATE 28 X 20 X .125 THK (2 PCS REQ'D FOR L. H. & R. H.)
3. FINISH: REMOVE ALL SHARP EDGES AND TRIM ALL LOOSE ENDS.

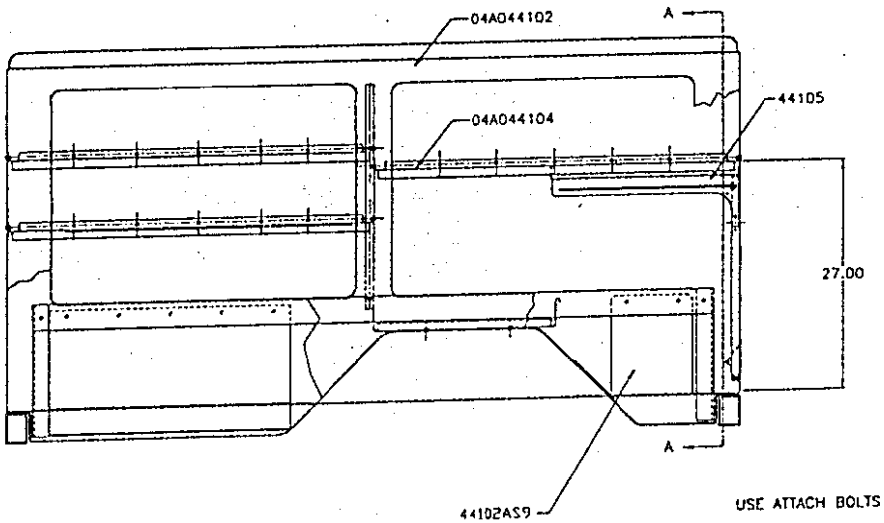

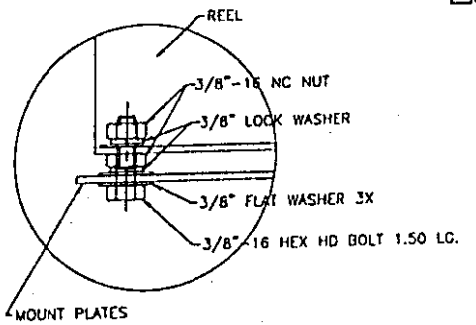

DOUBLE NUT REEL ASSY

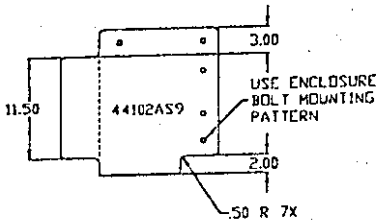

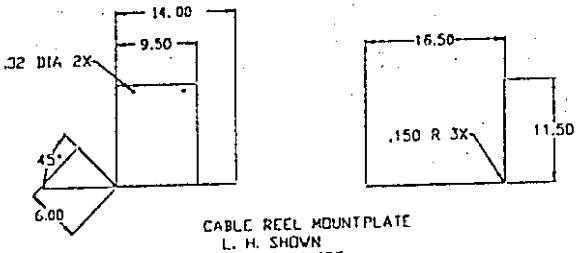

CABLE REEL MOUNTPLATE
L. H. SHOWN
R. H. OPPOSITE

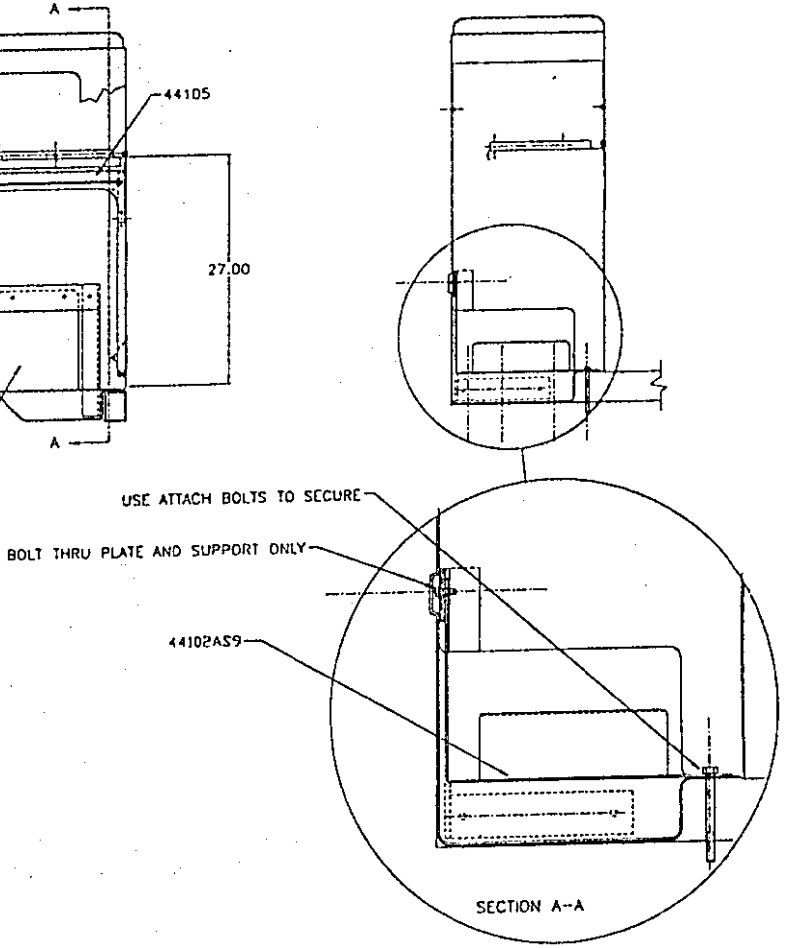

SECTION A-A

PART NO. 44102AS9

PMIC		DO NOT SCALE DRAWING	CONTRACT NUMBER
MECHANICAL PROPERTIES		UNLESS OTHERWISE SPECIFIED DIMENSIONS ARE IN INCHES TOLERANCES ON DECIMAL FRACTION 2 PL .05 3 PL .005	CONTRACTOR
		THIRD ANGLE PROJECTION	DRAWN BY L.C. MCFARLAND 97-01-23 CHECKER ENGINEER
	44102	TMWSS	DRAWING APPROVAL STEVE MARNIOTT
	NEXT ASSY	USED ON	DESIGN APPROVAL BOB RIEDL
	APPLICATION		

DEPARTMENT OF THE ARMY U.S. ARMY ARMAMENT RESEARCH, DEVELOPMENT AND ENGINEERING CENTER ROCK ISLAND, ILLINOIS 61299-7300

CABLE REEL MOUNT PAN
L.H. SHOWN, R.H. OPPOSITE

SIZE	CAGE CODE	
F	59678	44102AS9
SCALE DO NOT	UNIT WT.	SHEET

DISTRIBUTION STATEMENT A. APPROVED FOR PUBLIC RELEASE; DISTRIBUTION IS UNLIMITED.

ZONE	LTR	REVISIONS DESCRIPTION	DATE (YR-MO-DA)	APPROVED
-	-	ORIGINAL DRAWING PER LCMC	93-10-13	LCMC

CAD MAINTAINED. CHANGES SHALL BE INCORPORATED BY THE DESIGN ACTIVITY.

NOTES:

1. APPLICABLE STANDARDS/SPECIFICATIONS
   A. MIL-STD-100
   B. ANSI Y14.5M-1982
2. MATERIAL: ALUMINUM 6061 ALLOY FOR
   DETAIL 1, SHEET, .125 X 11 X 40 LG.
   DETAIL 2, SHEET, .125 X 12 X 16 LG.
   DETAIL 3, ANGLE, .25 X 2 X 2 X 8 LG
3. FINISH: REMOVE ALL SHARP EDGES AND TRIM ALL LOOSE ENDS.

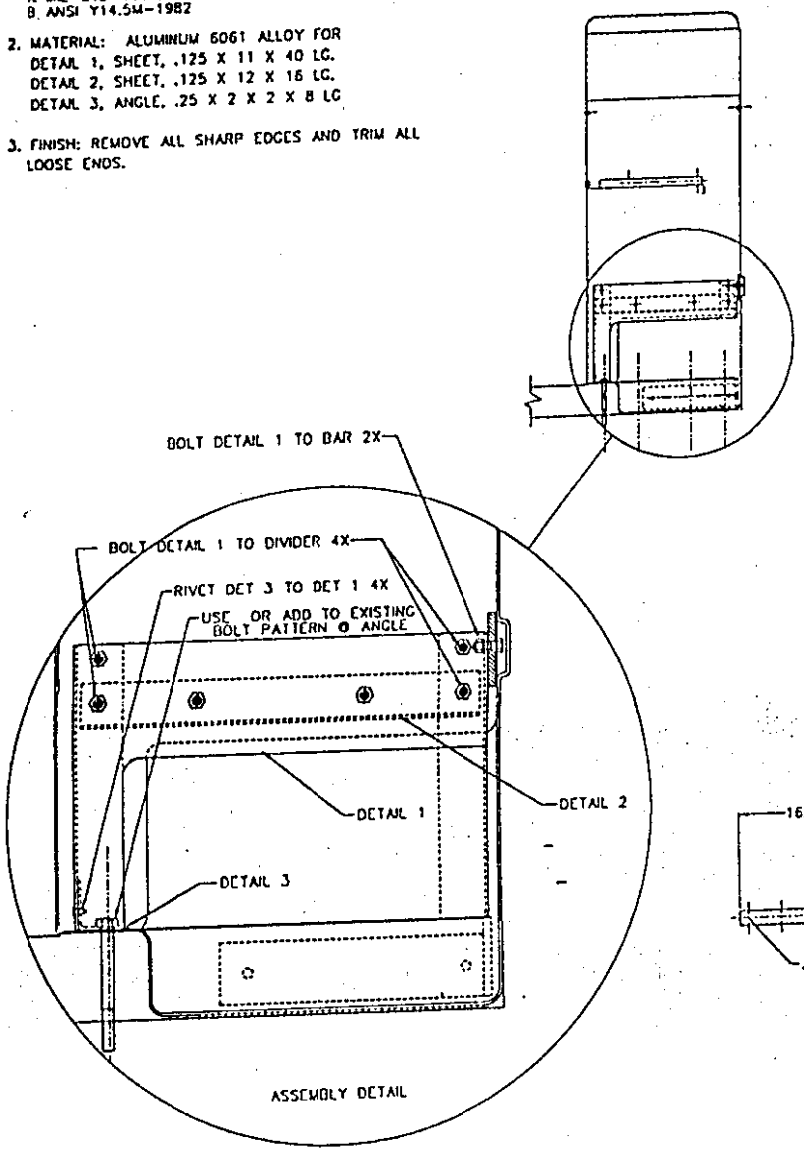

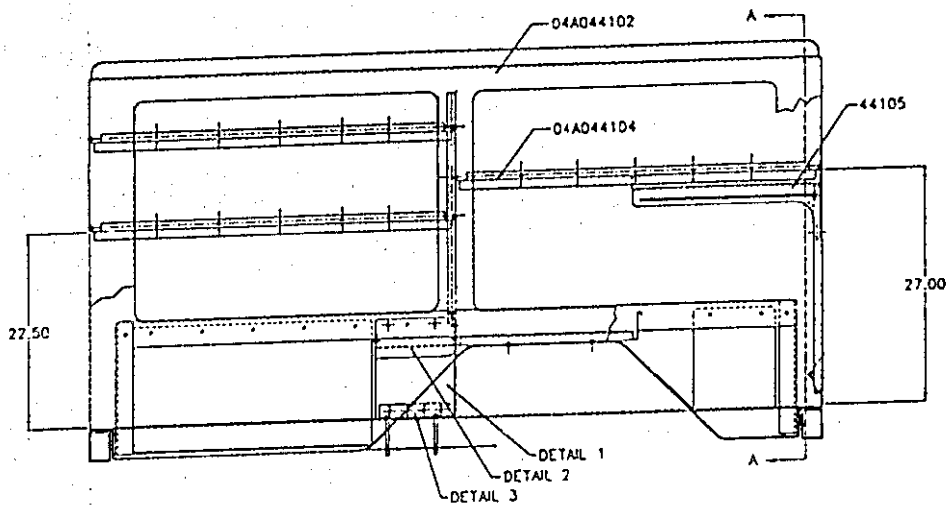

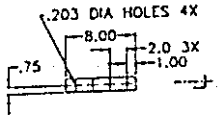

2 X 2 X 1/8 ANGLE

DETAIL 3

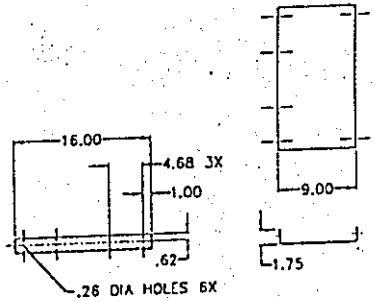

DETAIL 2

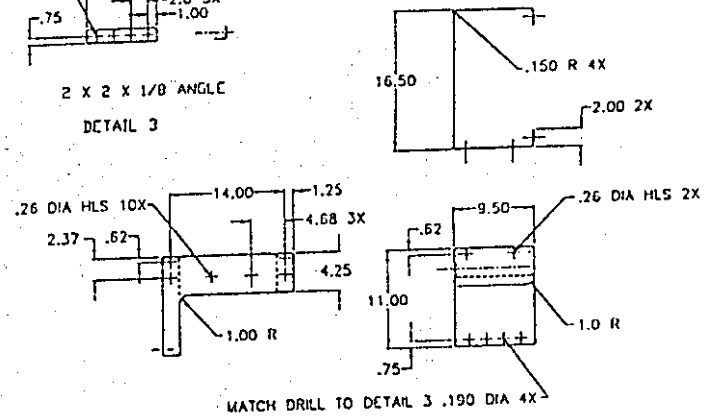

DETAIL 1

PART NO. 44102A10

PWC	DO NOT SCALE DRAWING	CONTRACT NUMBER / CONTRACTOR	DEPARTMENT OF THE ARMY U.S. ARMY AVIATION RESEARCH, DEVELOPMENT AND ENGINEERING CENTER FORT EUSTIS, VIRGINIA 23604-5577
MECHANICAL PROPERTIES	UNLESS OTHERWISE SPECIFIED DIMENSIONS ARE IN INCHES TOLERANCES ON: DECIMAL ± FRACTION ± ANGLES ±	DRAWN BY L.E. MCFARLANE 97-05-07 / CHECKED / ENGINEER	DIVIDER REINFORCEMENT & SHELF (LEFT SIDE ONLY)
	THIRD ANGLE PROJECTION	DRAWING APPROVAL STEVE WARNOFF	SIZE F / CAGE CODE 59678 / 44102A10
44102 NEXT ASSY / TIMESS USED ON	VIEW TYPE	DESIGN APPROVAL BOB NEUL	SCALE DO NOT / UNIT WT. / SHEET
APPLICATION			

DISTRIBUTION STATEMENT A. APPROVED FOR PUBLIC RELEASE; DISTRIBUTION IS UNLIMITED.

NOTES:

1. APPLICABLE STANDARDS/SPECIFICATIONS
   A MIL-STD-100
   B ANSI Y14.5M-1982
2. MATERIAL: ALUMINUM 6061 ALLOY FOR
   DETAIL 1, SHEET, .125 X 11 X 31 LG.
   DETAIL 2, SHEET, .125 X 12 X 12 LG.
   DETAIL 3, ANGLE, .25 X 2 X 2 X 4 LG
3. FINISH: REMOVE ALL SHARP EDGES AND TRIM ALL LOOSE ENDS.

CAD MAINTAINED. CHANGES SHALL BE INCORPORATED BY THE DESIGN ACTIVITY.

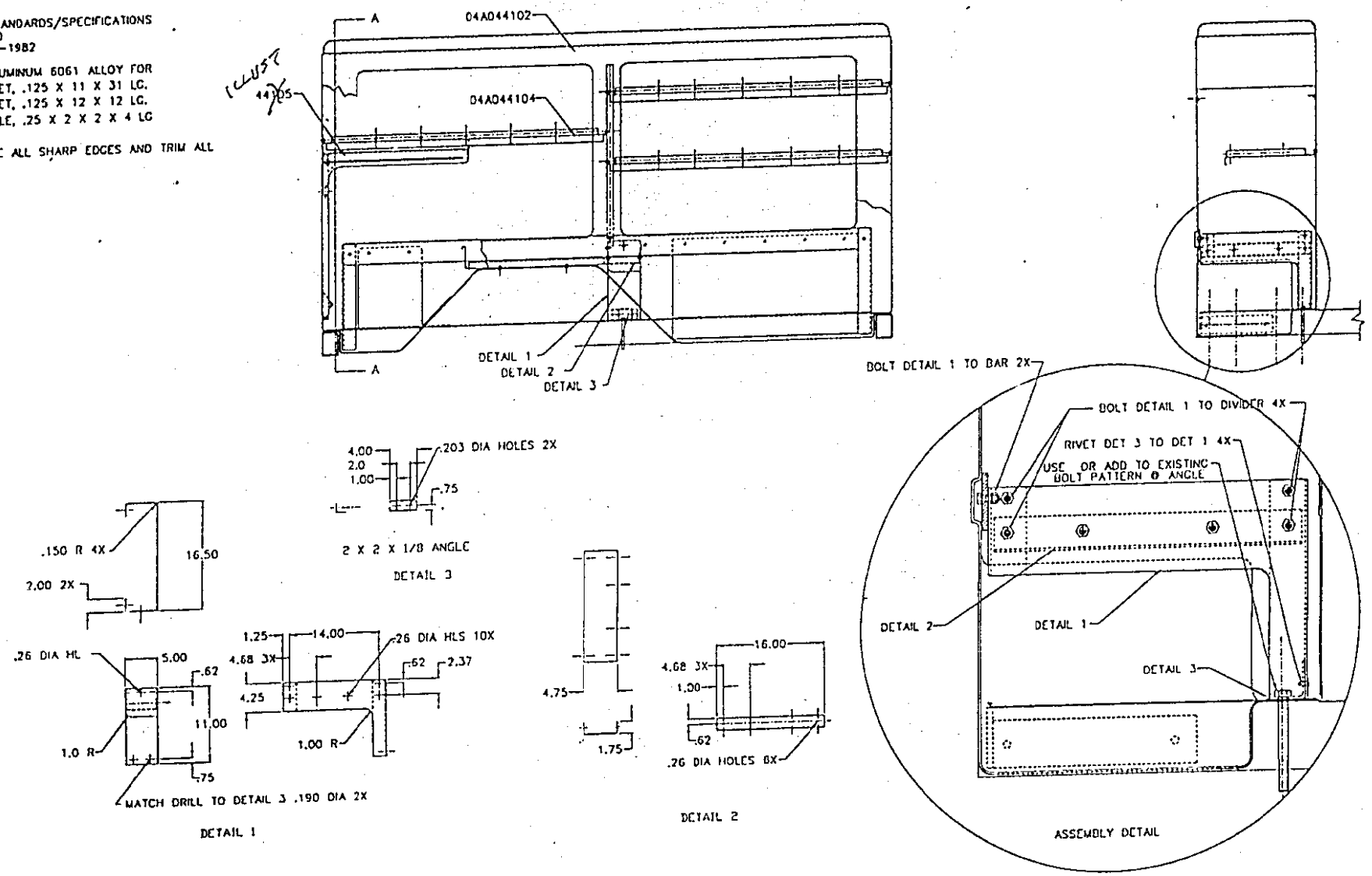

PART NO. 44102A11

PMIC		DO NOT SCALE DRAWING	CONTRACT NUMBER
MECHANICAL PROPERTIES			CONTRACTOR
	44102	TMNSS	DRAWN BY: J.C. MCFARLAND; 97-05-07
	NEXT ASSY	USED ON	CHECKER
	APPLICATION		DRAWING APPROVAL: STEVE MARRIOTT
			DESIGN APPROVAL: BOB HEOL

DIVIDER REINFORCEMENT & SHELF (RIGHT SIDE ONLY)

SIZE F | CAGE CODE 59678 | 44102A11

SCALE DO NOT | UNIT WT. | SHEET

DISTRIBUTION STATEMENT A. APPROVED FOR PUBLIC RELEASE; DISTRIBUTION IS UNLIMITED.

REVISIONS			
ZONE	LTR	DESCRIPTION	DATE (YR-MO-DA) / APPROVED
-	-	ORIGINAL DRAWING PER SCMC	93-10-22 SCMC

CAD MAINTAINED. CHANGES SHALL BE INCORPORATED BY THE DESIGN ACTIVITY.

NOTES:

1. APPLICABLE STANDARDS/SPECIFICATIONS
   A MIL-STD-100
   B ANSI Y14.5M-1982
2. MATERIAL: ALUMINUM 6061 ALLOY FOR
   DETAIL 1, (2 PCS) ANGLE, 2 X 2 X 1/4 X 2 LG.
   DETAIL 2, (2 PCS) ANGLE, 2 X 2 X 1/4 X 11 LG.
   & BAR, (2 PCS) .25 X 2 X 2
3. FINISH: REMOVE ALL SHARP EDGES AND TRIM ALL LOOSE ENDS.

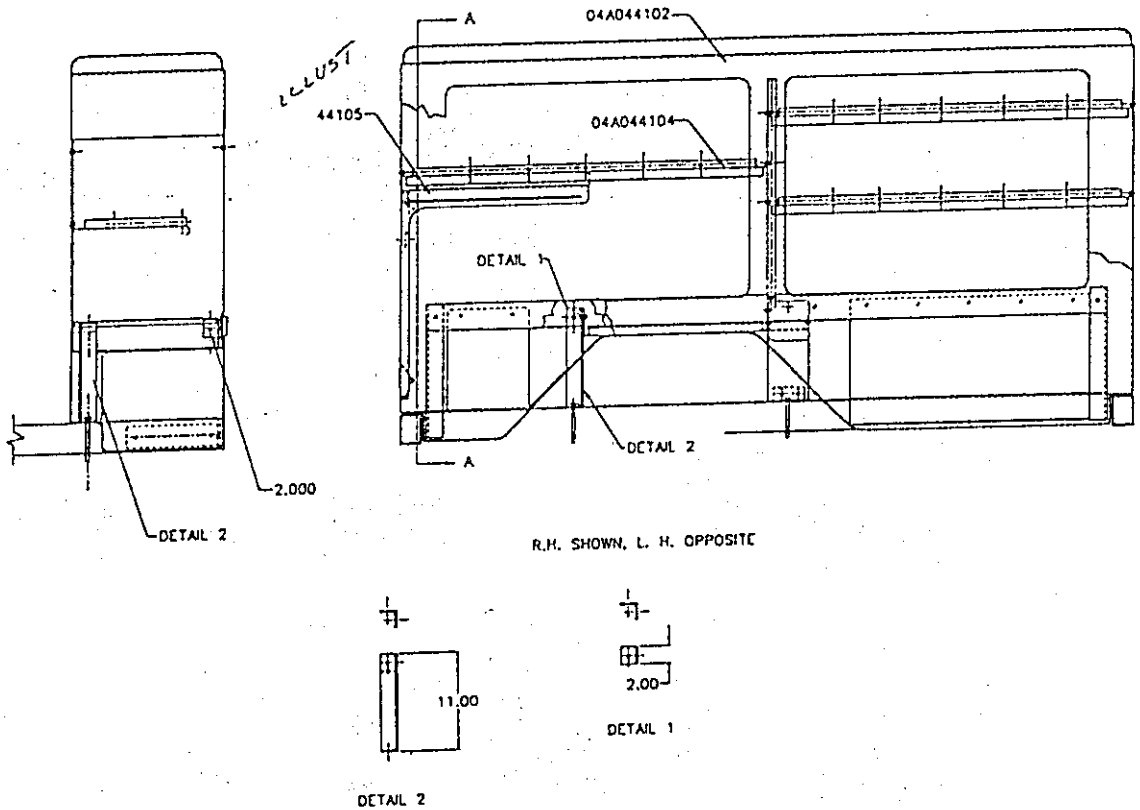

PART NO. 44102A12

PURC		DO NOT SCALE DRAWING	CONTRACT NUMBER / CONTRACTOR
MECHANICAL PROPERTIES		UNLESS OTHERWISE SPECIFIED DIMENSIONS ARE IN INCHES TOLERANCES ON DECIMAL ± .XX ± .XXX FRACTION	DRAWN BY I.E.WATANABE 87-03-02 / CHECKED THOMAS
	44102 / 3WASS	THIRD ANGLE PROJECTION	DRAWING APPROVAL STEVE MARRIOTT
	NEXT ASSY / USED ON	SIZE / CODE	DESIGN APPROVAL BOB REPL
	APPLICATION		

SHELF REINFORCEMENT (LEFT & RIGHT)

SIZE	CAGE CODE	
F	59678	44102A12

SCALE DO NOT | SHEET OF | SHEET

DISTRIBUTION STATEMENT A. APPROVED FOR PUBLIC RELEASE; DISTRIBUTION IS UNLIMITED.

NOTES:

1. APPLICABLE STANDARDS/SPECIFICATIONS
   A MIL-STD-100
   B ANSI Y14.5M-1982
   C ANSI/AWS A2.4 AND A3.0 (WELDING)
2. MATERIAL: USE TAIL LIGHTS, AND MARKING LIGHTS FROM TRAILER.
3. PRINT LETTER SIZE PORTRAIT ORIENTATION WITHIN HIDDEN LINE BOX TO OBTAIN A CUT-OUT TEMPLATE.
4. LOCATE THE TAIL LIGHTS AND MARKERS PER THIS DWG. (SEE DWG 04A047000 FOR WIRING REQUIREMENT.)

CAD MAINTAINED. CHANGES SHALL BE INCORPORATED BY THE DESIGN ACTIVITY.

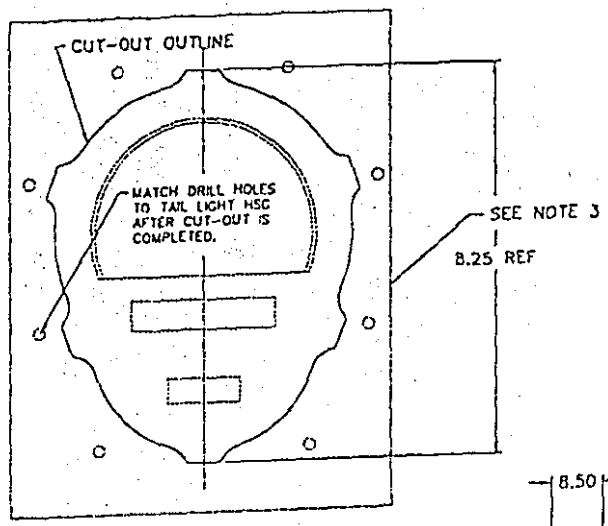

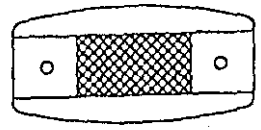

MARKER LIGHT
2 RED - DETAIL 3
4 AMBER - DETAIL

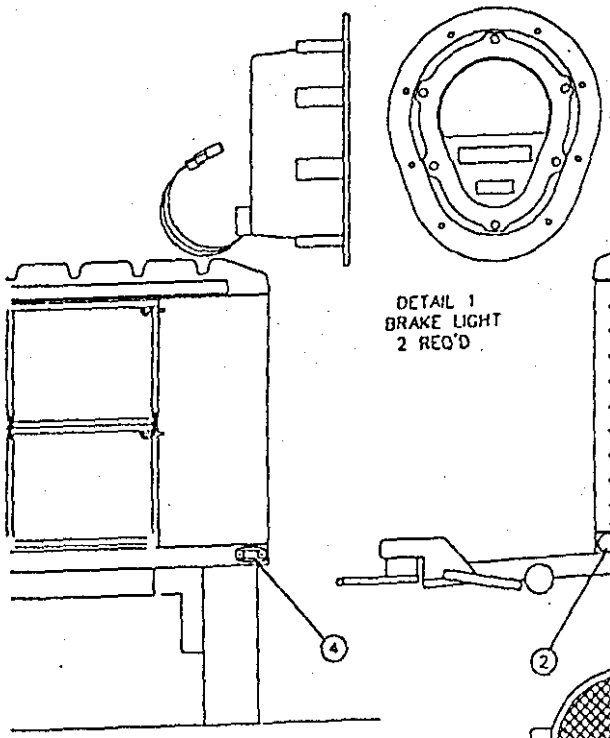

DETAIL 1
BRAKE LIGHT
2 REQ'D

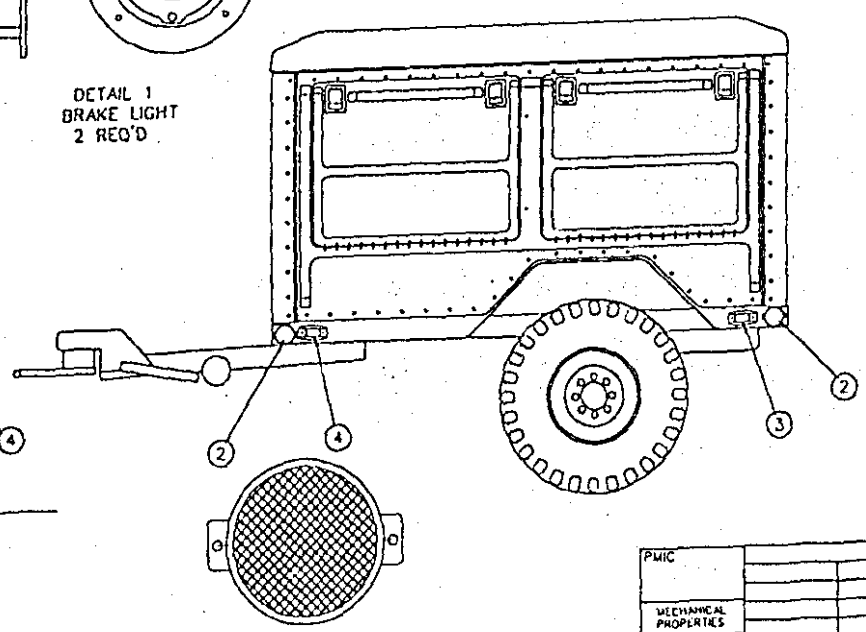

DETAIL 2
3" REFLECTOR
6 REQ'D

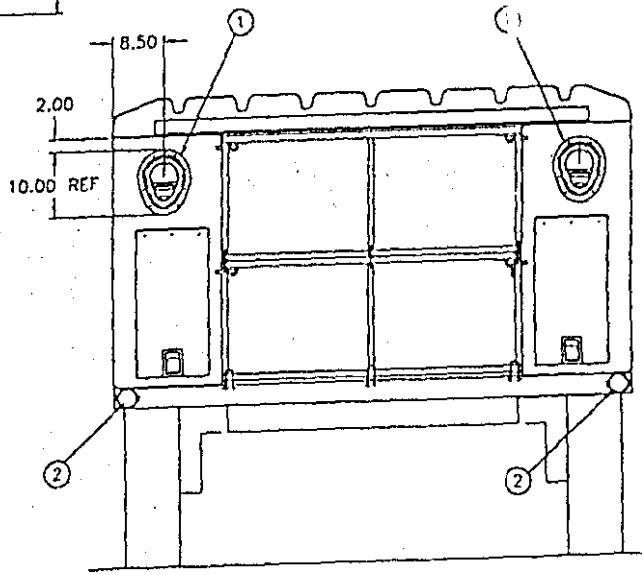

PART NO. 44102A13

PMIC		DO NOT SCALE DRAWING	CONTRACT NUMBER
MECHANICAL PROPERTIES		UNLESS OTHERWISE SPECIFIED: DIMENSIONS ARE IN INCHES TOLERANCES ON DECIMAL FRACTION	CONTRACTOR
		THIRD ANGLE PROJECTION	DRAWN BY L.E.MCFARLAND
	04A040004	TMWSS	CHECKER
	NEXT ASSY	USED ON	DRAWING APPROVAL STEVE MARRIOTT
	APPLICATION		DESIGN APPROVAL

DEPARTMENT OF THE ARMY
U.S. ARMY ARMAMENT RESEARCH, DEVELOPMENT AND ENGINEERING CENTER
ROCK ISLAND, ILLINOIS 61299-7300

TAIL LIGHT, MARKER LIGHT & REFLECTOR PLACEMENT

SIZE	CAGE CODE	
D	59678	44102A13

SCALE DO NOT | UNIT WT. | SHEET

DISTRIBUTION STATEMENT A. APPROVED FOR PUBLIC RELEASE; DISTRIBUTION IS UNLIMITED.

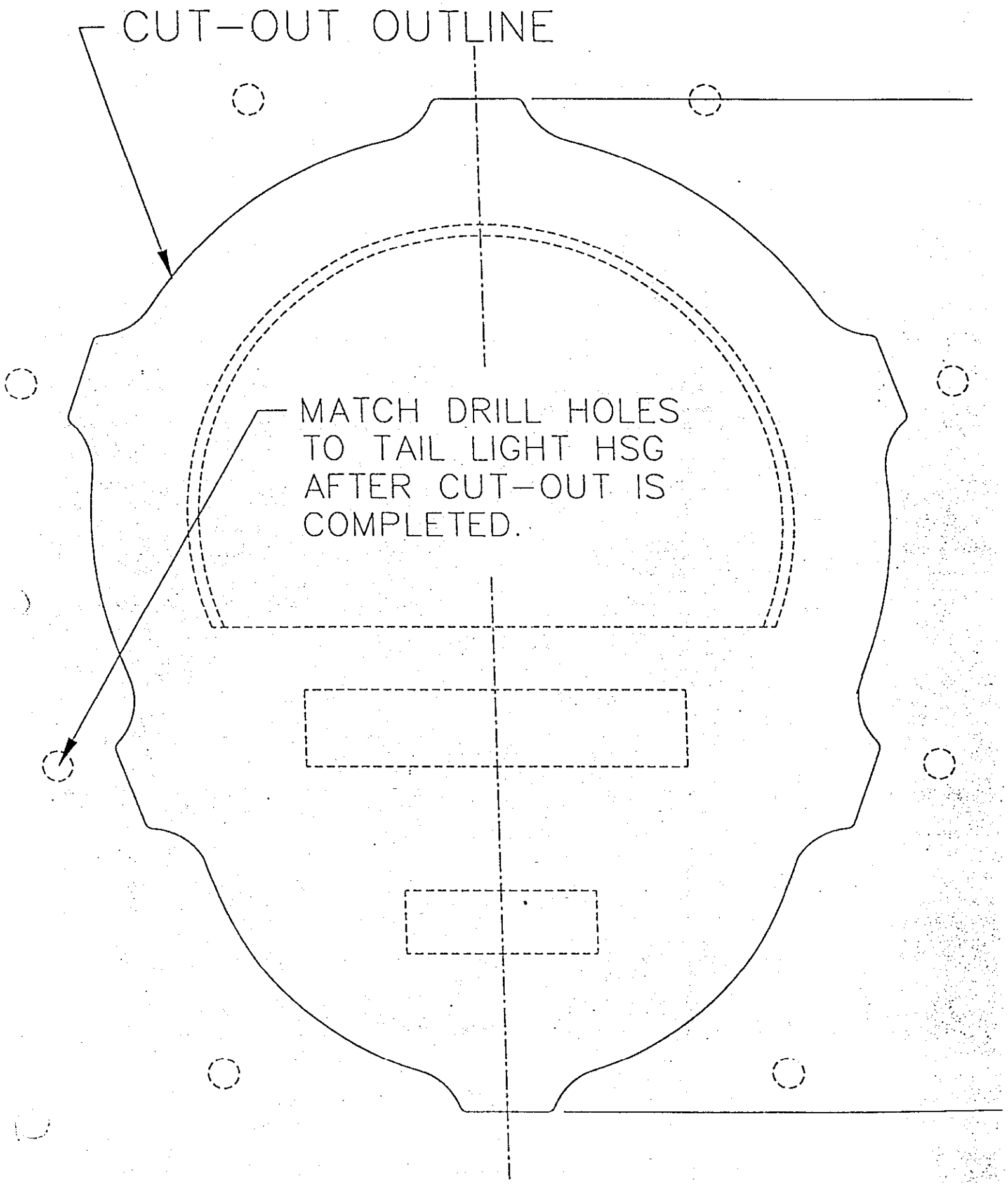
CUT-OUT OUTLINE
MATCH DRILL HOLES
TO TAIL LIGHT HSG
AFTER CUT-OUT IS
COMPLETED.

CAD MAINTAINED. CHANGES SHALL BE INCORPORATED BY THE DESIGN ACTIVITY.

NOTES:

1. APPLICABLE STANDARDS/SPECIFICATIONS
   A MIL-STD-100
   B ANSI Y14.5M-1982
2. MATERIAL: .375 BUNGEE SHOCK CORDING, 40' REQ'D.
3. FINISH: NONE

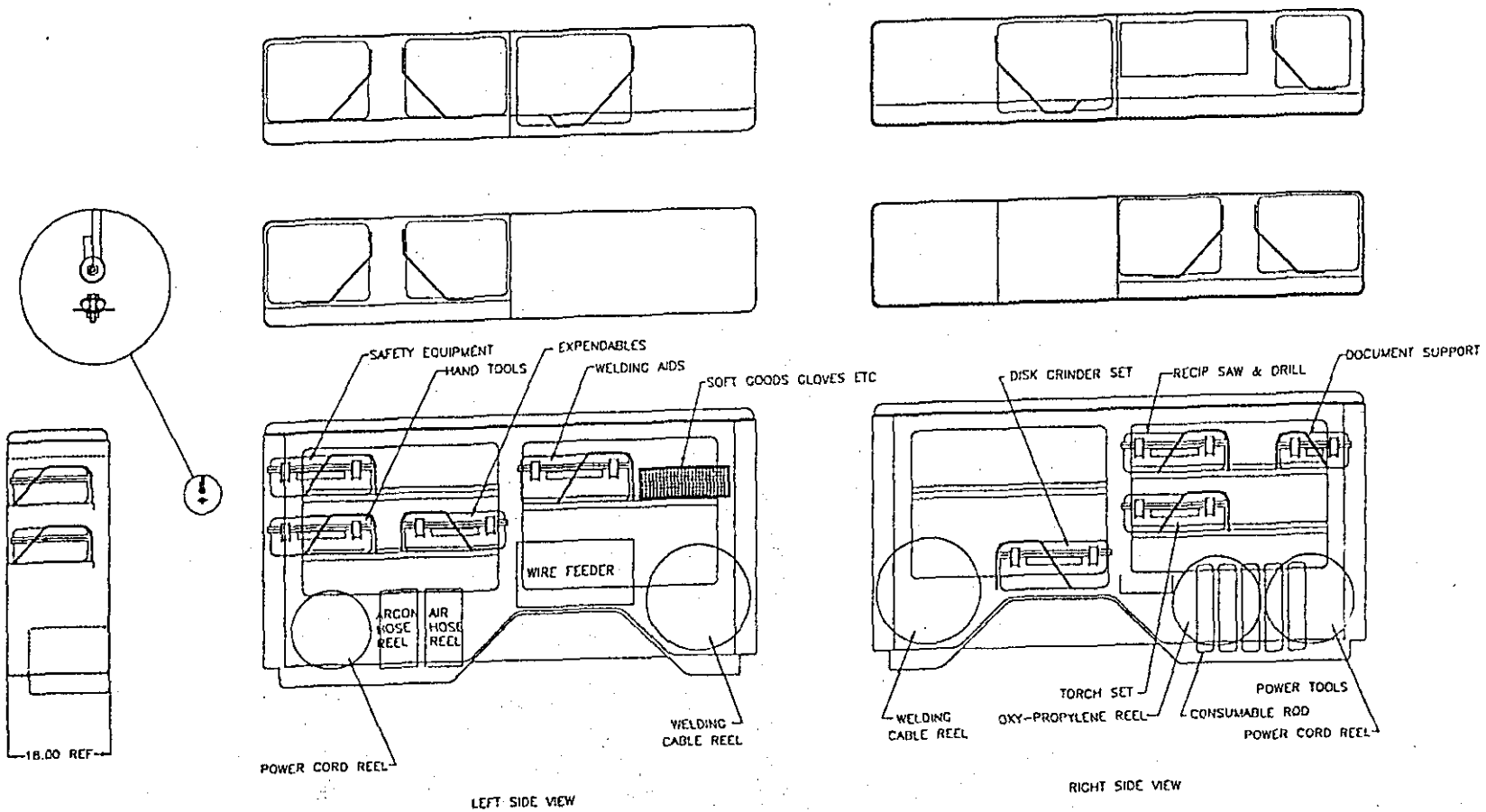

PART NO. 44102A14

PMIC	DO NOT SCALE DRAWING	CONTRACT NUMBER	BOX, LOCATION & TOOL LOAD POSITIONING
MECHANICAL PROPERTIES		CONTRACTOR	
	44102	TUWSS	SIZE F · CAGE CODE 59678 · 44102A14
	NEXT ASSY	USED ON	
	APPLICATION		

DISTRIBUTION STATEMENT A. APPROVED FOR PUBLIC RELEASE; DISTRIBUTION IS UNLIMITED.

CAD MAINTAINED. CHANGES SHALL BE INCORPORATED BY THE DESIGN ACTIVITY.

NOTES:

1. APPLICABLE STANDARDS/SPECIFICATIONS
   A MIL-STD-100
   B ANSI Y14.5M-1982
   C ANSI/AWS A2.4 AND A3.0 (WELDING)
2. MATERIAL: SQ TUBE, PLATE AND ANGLE
3. FINISH: NONE

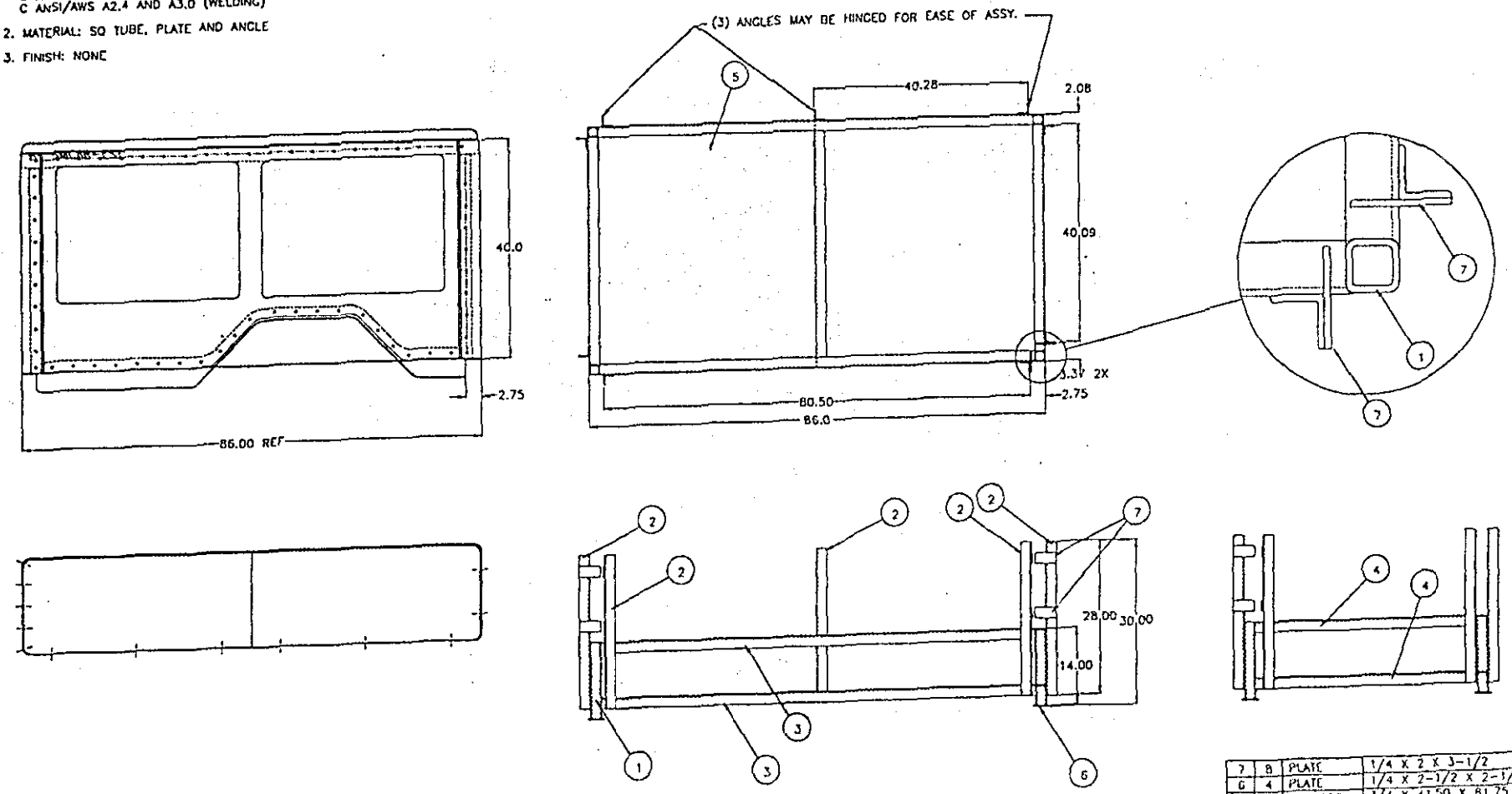

DET	QTY	NAME	SIZE
7	8	PLATE	1/4 X 2 X 3-1/2
6	4	PLATE	1/4 X 2-1/2 X 2-1/2
5	1	PLYWOOD	3/4 X 41.50 X 81.75
4	4	ANGLE	2 X 2 X 1/4 X 41.62 LG
3	4	ANGLE	2 X 2 X 1/4 X 82 LG
2	9	ANGLE	2 X 2 X 1/4 X 28 LG
1	4	SQ TUBE	2 X 2 X 1/4 WALL X 14 LG

LIST OF MATERIALS

ENCLOSURE ASSEMBLY SQUARING FIXTURE

F 59678 44102A15

DISTRIBUTION STATEMENT A. APPROVED FOR PUBLIC RELEASE; DISTRIBUTION IS UNLIMITED.

ZONE	LTR	REVISIONS DESCRIPTION	DATE	BY	APPROVED
-	-	ORIGINAL DRAWING PER LCMC	93-10-31	LCMC	

CAD MAINTAINED. CHANGES SHALL BE INCORPORATED BY THE DESIGN ACTIVITY.

FOR REFERENCE ONLY

NOTES:

1. APPLICABLE STANDARDS/SPECIFICATIONS
   A MIL-STD-100
   B ANSI Y14.5M-1982
2. MATERIAL: POLYETHELENE PLASTIC, .15 THICKNESS.
3. FINISH: REMOVE ALL SHARP EDGES AND TRIM ALL LOOSE ENDS, SMOOTH TO 125 SURFACE.
4. PROCESS IAW BEST COMMERCIAL PRACTICE FOR INTERNALLY MOLDED, CENTRIFUGALLY FORMED, HEATED POLYETHELENE PLASTIC WITH CROSS-LINKED FORMULA.

REVERIFY DIMS & CORRECT

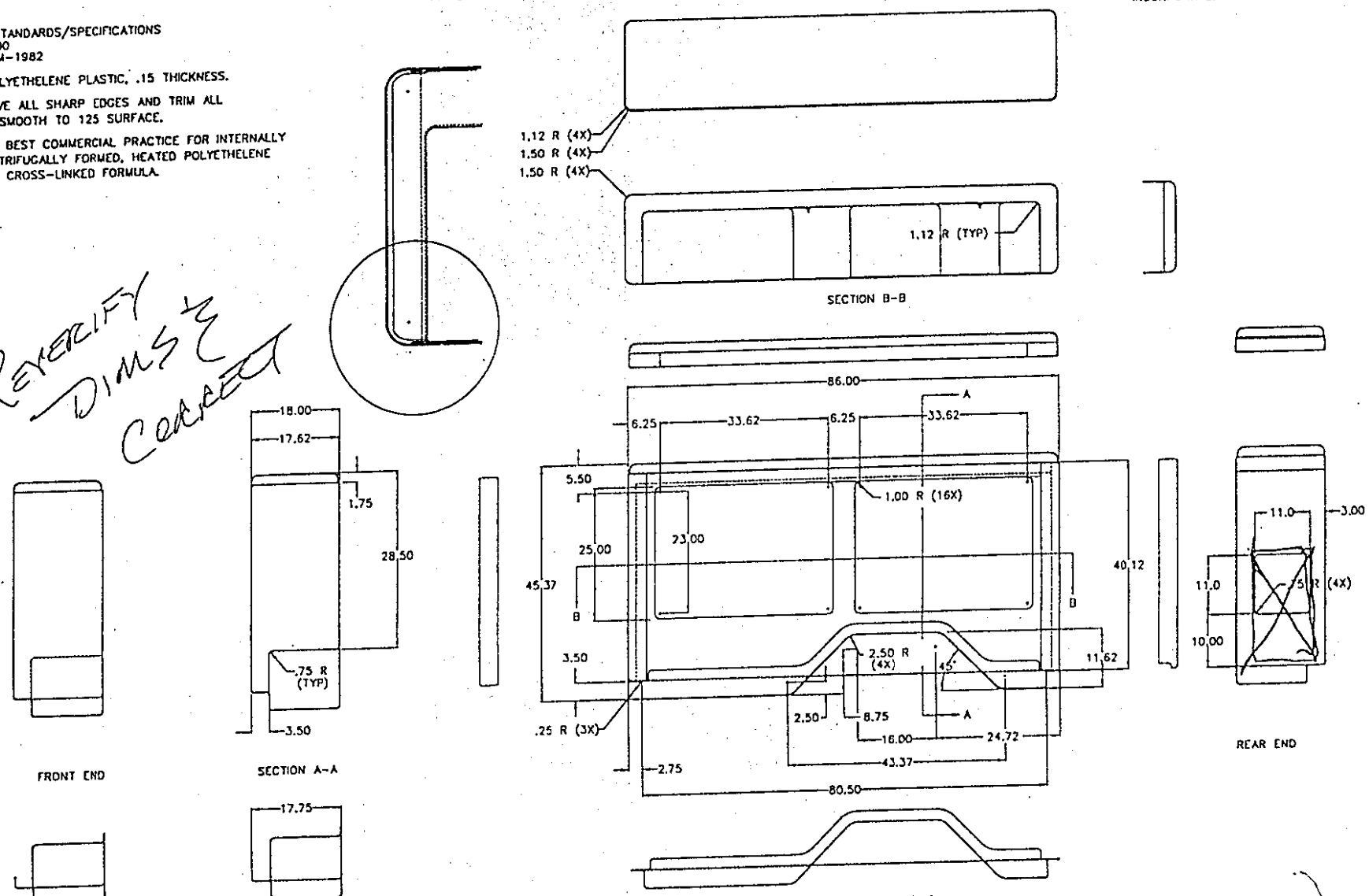

FOR REFERENCE ONLY

PART NO. 44102VF

PMC	DO NOT SCALE DRAWING	CONTRACT NUMBER	DEPARTMENT OF THE ARMY U.S. ARMY ARMAMENT RESEARCH DEVELOPMENT AND ENGINEERING CENTER ROCK ISLAND, ILLINOIS 61299-7300
MECHANICAL PROPERTIES	UNLESS OTHERWISE SPECIFIED DIMENSIONS ARE IN INCHES TOLERANCES ON DECIMAL .XX ±.05 .XXX ±.005 THIRD ANGLE PROJECTION	CONTRACTOR	ENCLOSURE, LEFT SIDE R.H. IS OPPOSITE
		DRAWN BY LCMC/MARLANE DATE 93-10-31	
		DESIGNER DATE	
		DRAWING APPROVAL STEVE MARRIOTT	SIZE F CAGE CODE 59678 44102VF
		DESIGN APPROVAL BOB RICOL	SCALE DO NOT SCALE SHEET
	TWWSS		
	NEXT ASSY / USED ON		
	APPLICATION		

DISTRIBUTION STATEMENT A. APPROVED FOR PUBLIC RELEASE; DISTRIBUTION IS UNLIMITED.

CAD MAINTAINED. CHANGES SHALL BE INCORPORATED BY THE DESIGN ACTIVITY.

NOTES:

1. APPLICABLE STANDARDS/SPECIFICATIONS
   A MIL-STD-100
   B ANSI Y14.5M-1982
2. MATERIAL: THERMOPLASTIC SHEET, .180 MINIMUM THICKNESS AFTER FORMING. FOR HOT VACUUM FORMING, REF KYDEX
3. FINISH: NONE

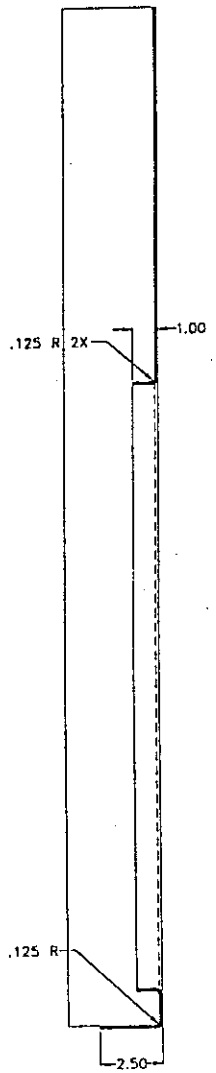

SECTION B-B

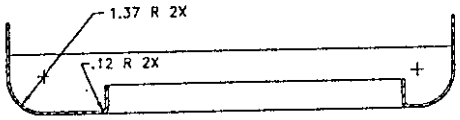

SECTION A-A

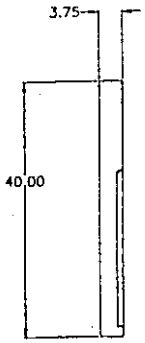

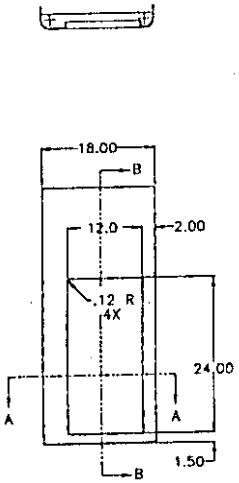

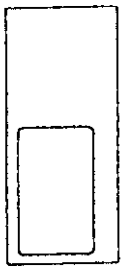

SUGGESTED SOURCE:
PLASTICS UNLIMITED, INC
303-1ST STREET
P.O. BOX 614
PRESTON, IA
PHONE 1-319-689-4752
TERRY KIEFFER

DISTRIBUTION STATEMENT A. APPROVED FOR PUBLIC RELEASE; DISTRIBUTION IS UNLIMITED.

PART NO. 44102VF2

END PANEL, ENCLOSURE
LEFT SIDE, REAR

SIZE	CAGE CODE	
F	59678	44102VF2

DO NOT SCALE DRAWING

THIRD ANGLE PROJECTION

MECHANICAL PROPERTIES

44102 | TMWSS
NEXT ASSY | USED ON
APPLICATION

DEPARTMENT OF THE ARMY
U.S. ARMY ARMAMENT RESEARCH, DEVELOPMENT AND ENGINEERING CENTER
ROCK ISLAND, ILLINOIS 61299-7301

DRAWN BY L.C. MCFARLAND
CHECKER
DRAWING APPROVAL STEVE MARRIOTT
DESIGN APPROVAL BOB REDL

CAD MAINTAINED. CHANGES SHALL BE INCORPORATED BY THE DESIGN ACTIVITY.

NOTES:

1. APPLICABLE STANDARDS/SPECIFICATIONS
   A MIL-STD-100
   B ANSI Y14.5M-1982
2. MATERIAL: THERMOPLASTIC SHEET, .180 MINIMUM THICKNESS AFTER FORMING. FOR VACUUM FORMING, REF KYDEX/KLEERDEX CO.
3. FINISH: NONE

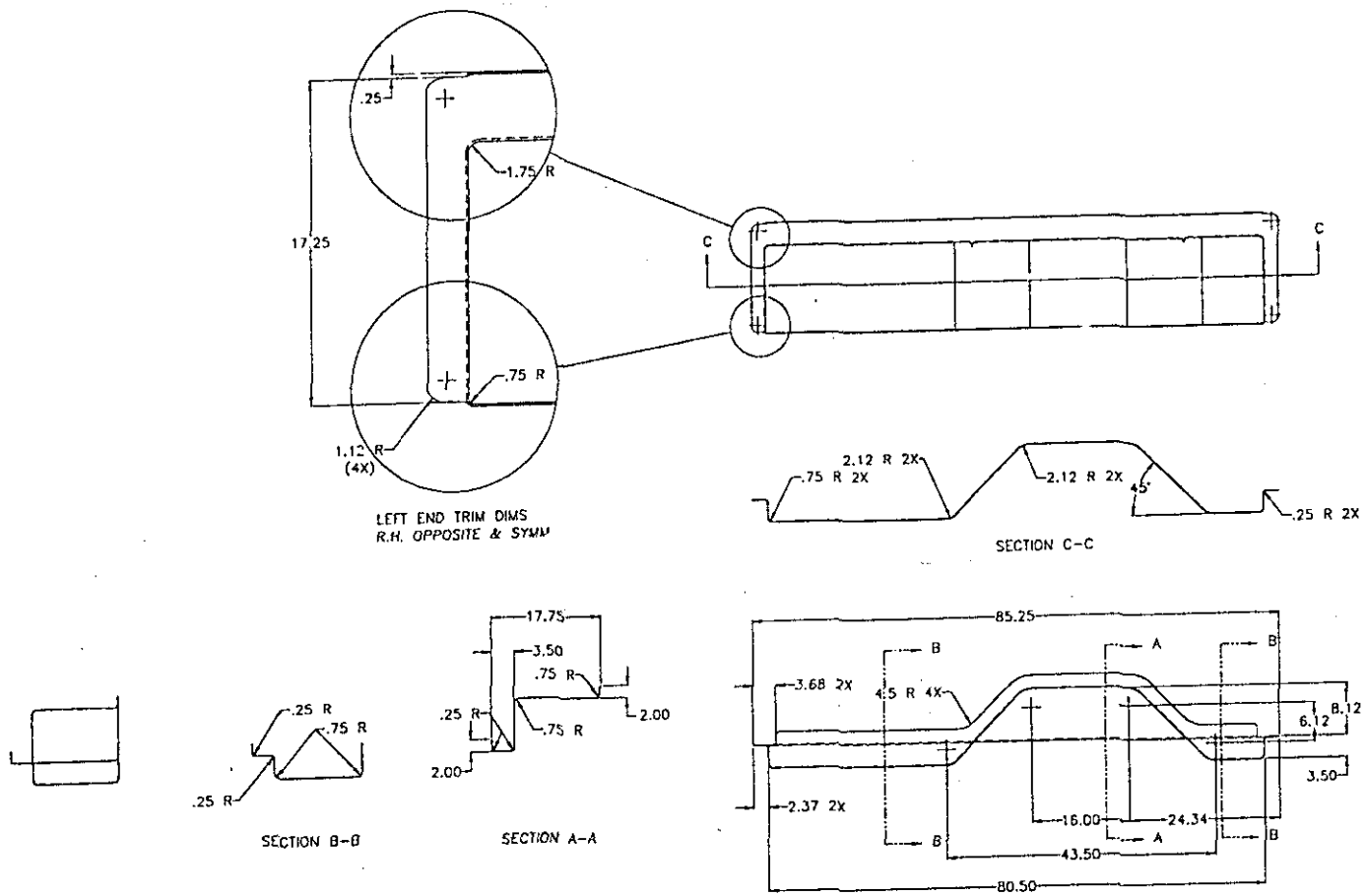

LEFT END TRIM DIMS
R.H. OPPOSITE & SYMM

SECTION C-C

SECTION B-B

SECTION A-A

SUGGESTED SOURCE:
PLASTICS UNLIMITED, INC
303-1ST STREET
P.O. BOX 614
PRESTON, IA
PHONE 1-319-689-4752
TERRY KIEFFER

PART NO. 44102VF3

PMIC		DO NOT SCALE DRAWING	CONTRACT NUMBER
MECHANICAL PROPERTIES		UNLESS OTHERWISE SPECIFIED: DIMENSIONS ARE IN INCHES TOLERANCES ON DECIMAL FRACTION	CONTRACTOR
	44102	THIRD ANGLE PROJECTION	DRAWN BY L.C. McFARLAND 87-02-06
	NEXT ASSY	USED ON	CHECKER ENGINEER
	APPLICATION	DATE ENGR	DRAWING APPROVAL STEVE MARMOTT
			DESIGN APPROVAL BOB RIEDL

DEPARTMENT OF THE ARMY
U.S. ARMY ARMAMENT RESEARCH DEVELOPMENT AND ENGINEERING CENTER
ROCK ISLAND, ILLINOIS 61299-7300

BOTTOM, ENCLOSURE
LEFT SIDE

SIZE F | CAGE CODE 59678 | 44102VF3

SCALE | UNIT WT | SHEET

DISTRIBUTION STATEMENT A. APPROVED FOR PUBLIC RELEASE; DISTRIBUTION IS UNLIMITED.

NOTES:

1. APPLICABLE STANDARDS/SPECIFICATIONS
   A MIL-STD-100
   B ANSI Y14.5M-1982
2. MATERIAL: THERMOPLASTIC SHEET, .180 MINIMUM THICKNESS AFTER FORMING. FOR VACUUM FORMING, REF KYDEX/KLEERDEX CO. (2) INSIDES, (1) EA R.H. OUTSIDE, (1) EA. L.H. OUTSIDE.
3. FINISH: NONE

CAD MAINTAINED. CHANGES SHALL BE INCORPORATED BY THE DESIGN ACTIVITY.

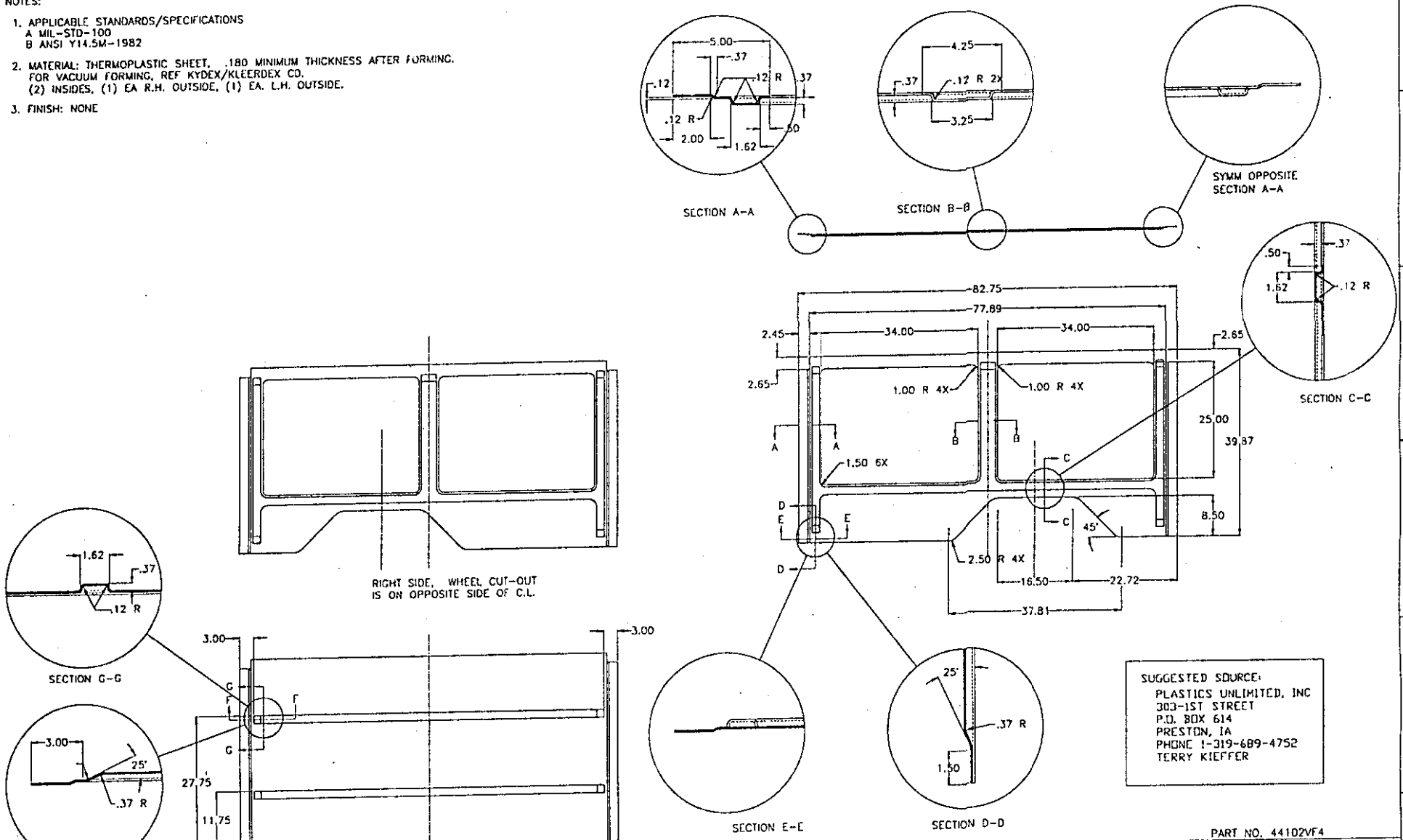

SUGGESTED SOURCE:
PLASTICS UNLIMITED, INC
303-1ST STREET
P.O. BOX 614
PRESTON, IA
PHONE 1-319-689-4752
TERRY KIEFFER

PART NO. 44102VF4

SIDES, ENCLOSURE, L.H. & R.H. INNER & OUTER PANELS

SIZE	CAGE CODE	
F	59678	44102VF4

DISTRIBUTION STATEMENT A. APPROVED FOR PUBLIC RELEASE; DISTRIBUTION IS UNLIMITED.

NOTES:

1. APPLICABLE STANDARDS/SPECIFICATIONS
   A MIL-STD-100
   B ANSI Y14.5M-1982
2. MATERIAL: STANDARD COMMERCIAL ALUMINUM HINGE .125 MATERIAL, .187 DIA PIN, 2.5" WIDE X 33" LG. (4) PCS REQ'D
3. FINISH: NONE

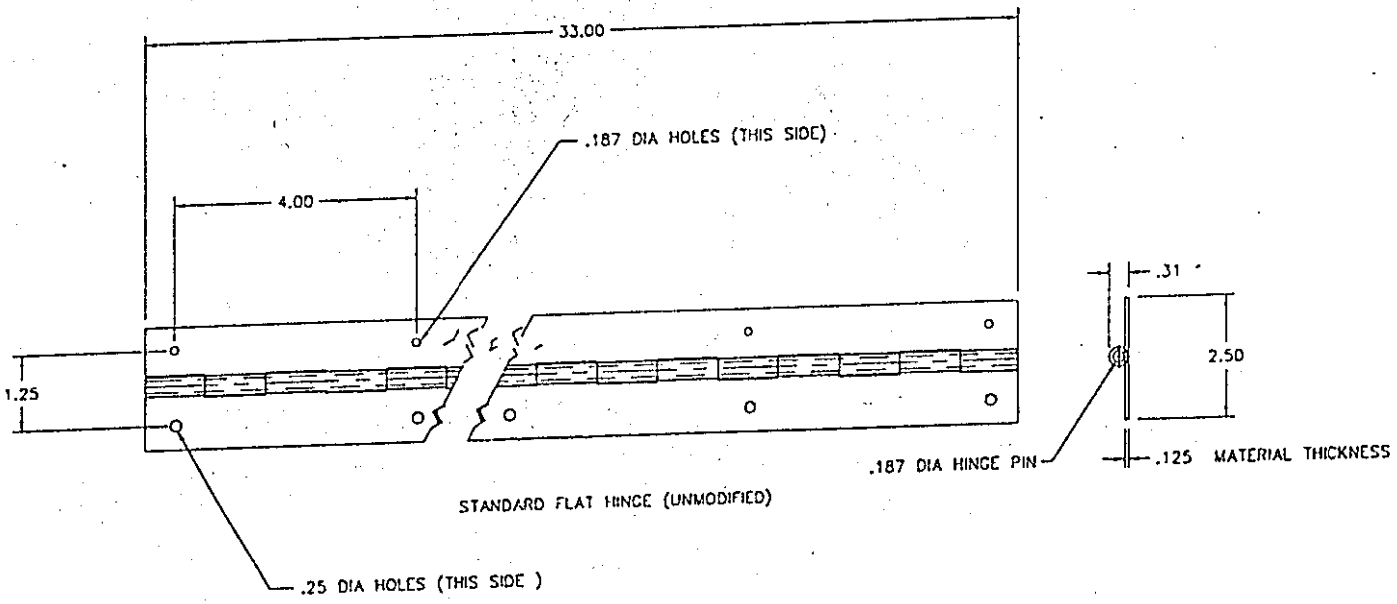

STANDARD FLAT HINGE (UNMODIFIED)

STANDARD FLAT HINGE DRILLED

CAD MAINTAINED. CHANGES SHALL BE INCORPORATED BY THE DESIGN ACTIVITY.

PART NO. 44102VF5

PMIC	DO NOT SCALE DRAWING	CONTRACT NUMBER	DEPARTMENT OF THE ARMY U.S. ARMY ARMAMENT RESEARCH, DEVELOPMENT AND ENGINEERING CENTER ROCK ISLAND, ILLINOIS 61299-7300
MECHANICAL PROPERTIES	UNLESS OTHERWISE SPECIFIED DIMENSIONS ARE IN INCHES TOLERANCES ON DECIMAL 2 PL .06 3 PL .005 FRACTION ±	CONTRACTOR	HINGE, SIDE DOOR PANEL
	THIRD ANGLE PROJECTION	DRAWN BY L.C.MCFARLAND 88-12-05 CHECKER ENGINEER	
44102AS5	TMWSS	DRAWING APPROVAL STEVE MARRIOTT	SIZE D CAGE CODE 59678 44102VF5
NEXT ASSY	USED ON	DESIGN APPROVAL BOB NICOL	SCALE DO NOT SHEET
APPLICATION	MATL ENGR		

DISTRIBUTION STATEMENT A. APPROVED FOR PUBLIC RELEASE; DISTRIBUTION IS UNLIMITED.

REVISIONS				
ZONE	LTR	DESCRIPTION	DATE (YR-MO-DA)	APPROVED

CAD MAINTAINED. CHANGES SHALL BE INCORPORATED BY THE DESIGN ACTIVITY.

NOTES:

1. APPLICABLE STANDARDS/SPECIFICATIONS
   A MIL-STD-100
   B ANSI Y14.5M-1982
2. MATERIAL: THERMOPLASTIC SHEET, .180 MINIMUM THICKNESS AFTER FORMING. FOR VACUUM FORMING. REF KYDEX. (2) REQ'D.
3. FINISH: NONE

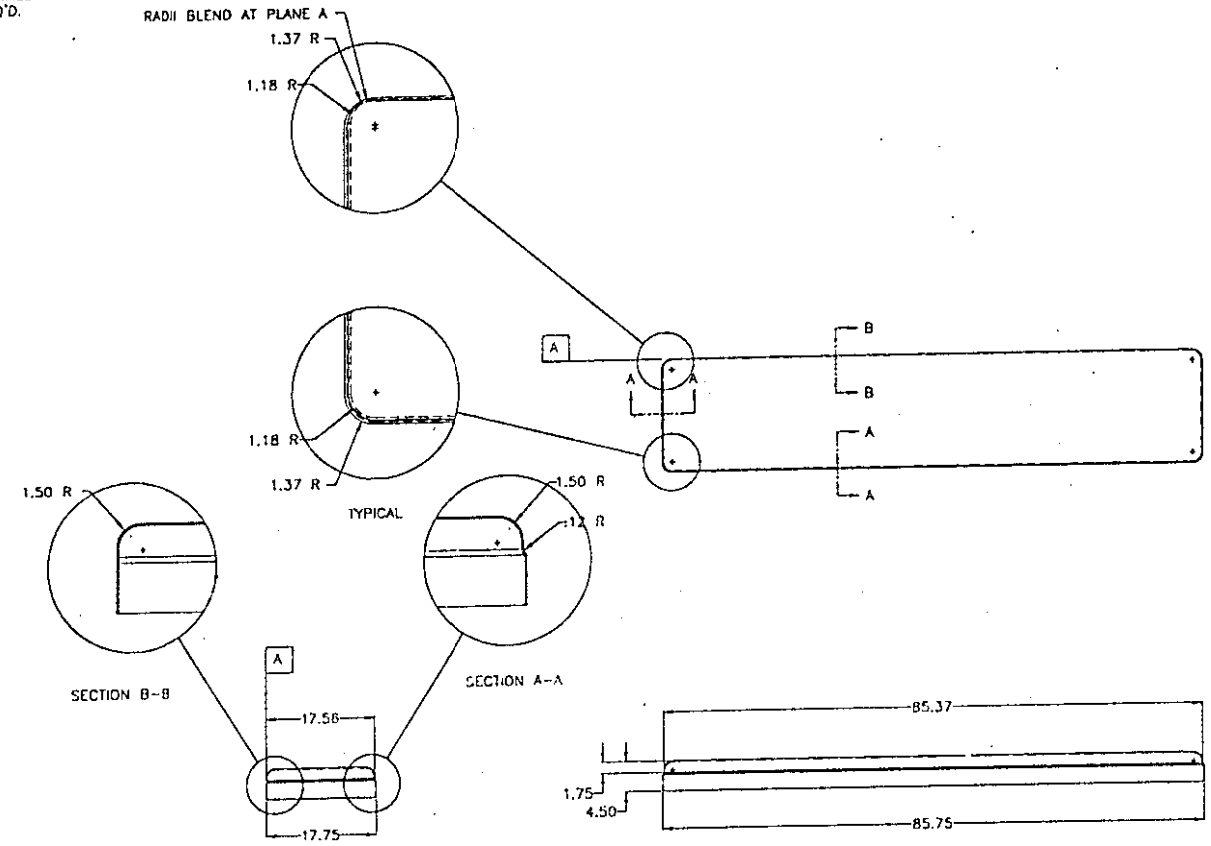

SUGGESTED SOURCE:
PLASTICS UNLIMITED, INC
303-1ST STREET
P.O. BOX 614
PRESTON, IA
PHONE 1-319-689-4752
TERRY KIEFFER

PART NO. 44102VF6

PMIC	DO NOT SCALE DRAWING	CONTRACT NUMBER	DEPARTMENT OF THE ARMY U.S. ARMY ARMAMENT RESEARCH, DEVELOPMENT AND ENGINEERING CENTER ROCK ISLAND, ILLINOIS 61299-7300
MECHANICAL ENGINEERING	UNLESS OTHERWISE SPECIFIED: DIMENSIONS ARE IN INCHES TOLERANCES ON DECIMAL ±.01 FRACTION ±	CONTRACTOR	TOP, ENCLOSURE LEFT AND RIGHT SIDE
	THIRD ANGLE PROJECTION	DRAWN BY L.C. HOLMAN JR. 07-03-90 CHECKER	SIZE F CAGE CODE 59678 44102VF6
44102	TWRSS	DRAWING APPROVAL STEVEN WARNOTT	SCALE DO NOT USE UNIT WT SHEET
NEXT ASSY	USED ON	DESIGN APPROVAL BOB NEAL	
APPLICATION			

DISTRIBUTION STATEMENT A. APPROVED FOR PUBLIC RELEASE; DISTRIBUTION IS UNLIMITED.

CAD MAINTAINED. CHANGES SHALL BE INCORPORATED BY THE DESIGN ACTIVITY.

NOTES:

1. APPLICABLE STANDARDS/SPECIFICATIONS
   A MIL-STD-100
   B ANSI Y14.5M-1982
2. MATERIAL: THERMOPLASTIC SHEET, .180 MINIMUM THICKNESS AFTER FORMING. FOR VACUUM FORMING, REF KYDEX/KLEERDEX CO.
3. FINISH: NONE

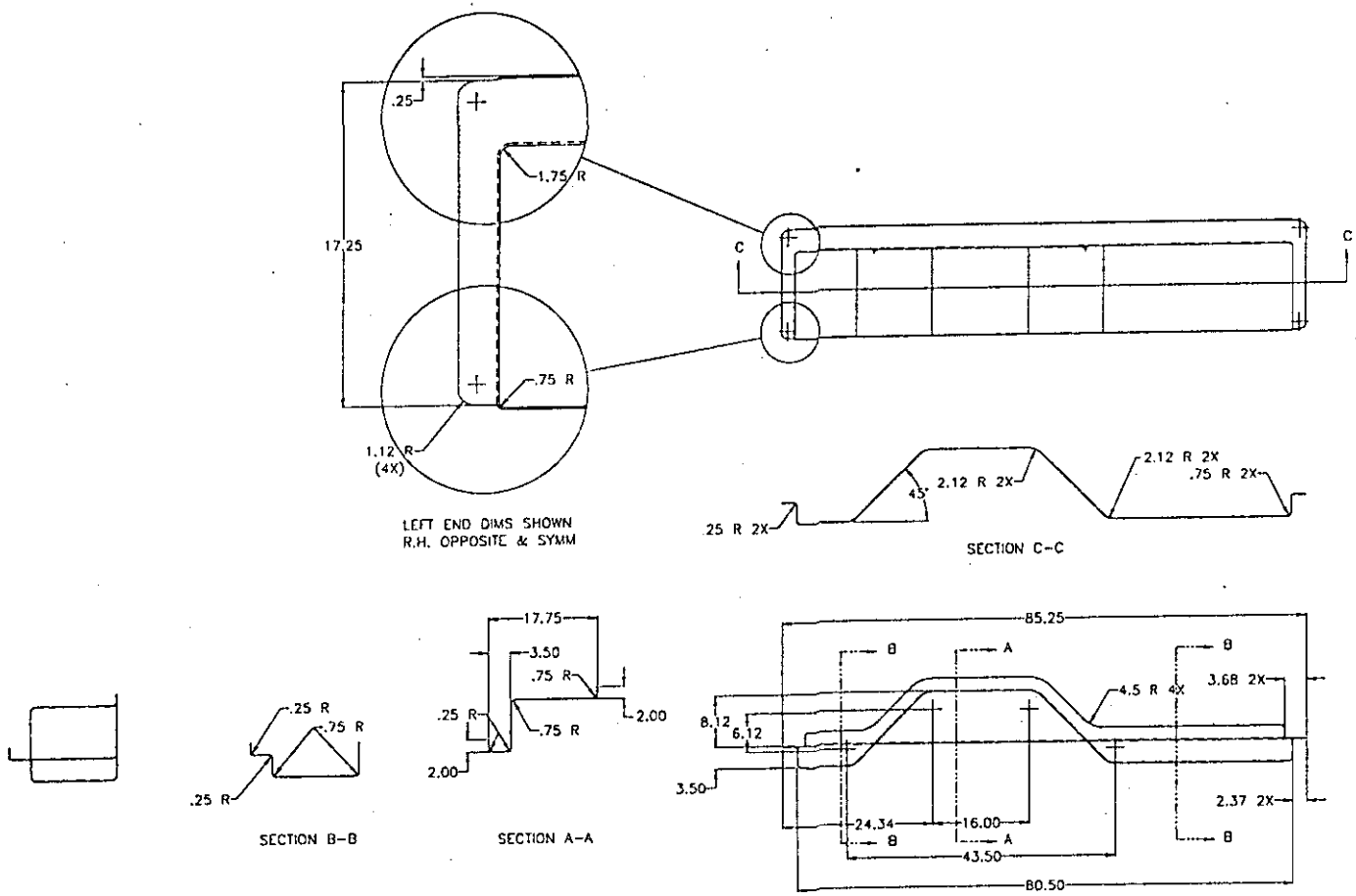

SUGGESTED SOURCE:
PLASTICS UNLIMITED, INC
303-1ST STREET
P.O. BOX 614
PRESTON, IA
PHONE 1-319-689-4752
TERRY KIEFFER

PART NO. 44102VF7

PMIC	DO NOT SCALE DRAWING	CONTRACT NUMBER	DEPARTMENT OF THE ARMY U.S. ARMY ARMAMENT RESEARCH, DEVELOPMENT AND ENGINEERING CENTER ROCK ISLAND, ILLINOIS 61299-7300
MECHANICAL PROPERTIES	UNLESS OTHERWISE SPECIFIED DIMENSIONS ARE IN INCHES TOLERANCES ON DECIMAL 2 PL .06 3 PL .010 FRACTION ±	CONTRACTOR	BOTTOM, ENCLOSURE RIGHT SIDE
YP / YS / EL2 / RA / RH / RH	THIRD ANGLE PROJECTION	DRAWN BY L.C. MCFARLAND / CHECKER / ENGINEER	SIZE F / CAGE CODE 59678 / 44102VF7
	44102 / TMWSS	DRAWING APPROVAL STEVE MARRIOTT	SCALE / UNIT WT. / SHEET
	NEXT ASSY / USED ON	DESIGN APPROVAL BOB RIEDL	
	APPLICATION		

DISTRIBUTION STATEMENT A. APPROVED FOR PUBLIC RELEASE; DISTRIBUTION IS UNLIMITED.

NOTES:

1. APPLICABLE STANDARDS/SPECIFICATIONS
   A MIL-STD-100
   B ANSI Y14.5M-1982
2. MATERIAL: THERMOPLASTIC SHEET, .180 MINIMUM THICKNESS AFTER FORMING. FOR HOT VACUUM FORMING, REF KYDEX
3. FINISH: NONE

CAD MAINTAINED. CHANGES SHALL BE INCORPORATED BY THE DESIGN ACTIVITY.

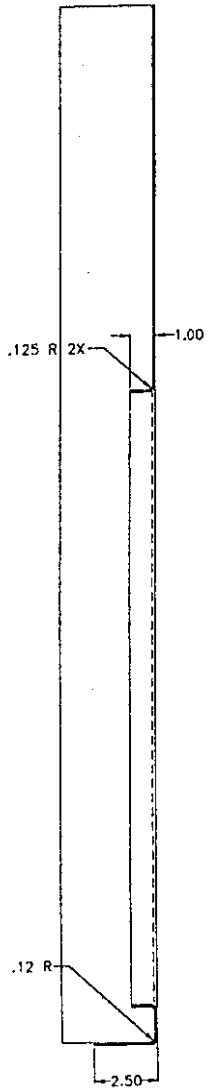

SECTION B-B

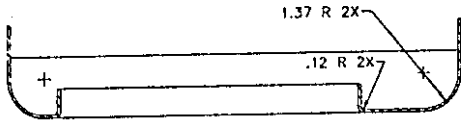

SECTION A-A

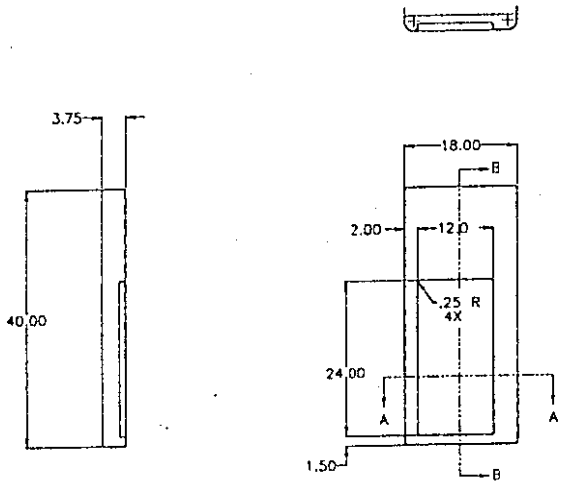

SUGGESTED SOURCE
PLASTICS UNLIMITED, INC
303-1ST STREET
P.O. BOX 614
PRESTON, IA
PHONE 1-319-689-4752
TERRY KIEFFER

PART NO. 44102VF8

PMIC		DO NOT SCALE DRAWING	CONTRACT NUMBER
MECHANICAL PROPERTIES		UNLESS OTHERWISE SPECIFIED DIMENSIONS ARE IN INCHES TOLERANCES ON DECIMAL FRACTION 2 PL .08 3 PL .010 E	CONTRACTOR
		THIRD ANGLE PROJECTION	DRAWN BY L.C.MCFARLAND 07-02-08
			CHECKER ENGINEER
	44102 TMWSS		DRAWING APPROVAL STEVE MARRIOTT
	NEXT ASSY USED ON	MAIL ENGR	DESIGN APPROVAL BOB RIEDL
	APPLICATION		

DEPARTMENT OF THE NAVY
U.S. ARMY ARMAMENT RESEARCH, DEVELOPMENT AND ENGINEERING CENTER
ROCK ISLAND, ILLINOIS 61299-7300

END PANEL, ENCLOSURE
RIGHT SIDE, REAR

SIZE	CAGE CODE	
F	59678	44102VF8

SCALE DO NOT | UNIT WT | SHEET

DISTRIBUTION STATEMENT A. APPROVED FOR PUBLIC RELEASE; DISTRIBUTION IS UNLIMITED.

CAD MAINTAINED. CHANGES SHALL BE INCORPORATED BY THE DESIGN ACTIVITY.

NOTES:

1. APPLICABLE STANDARDS/SPECIFICATIONS
   A MIL-STD-100
   B ANSI Y14.5M-1982
2. MATERIAL: THERMOPLASTIC SHEET, .180 MINIMUM THICKNESS AFTER FORMING. HOT VACUUM FORMING, REF KYDEX. (2) REQ'D.
3. FINISH: NONE

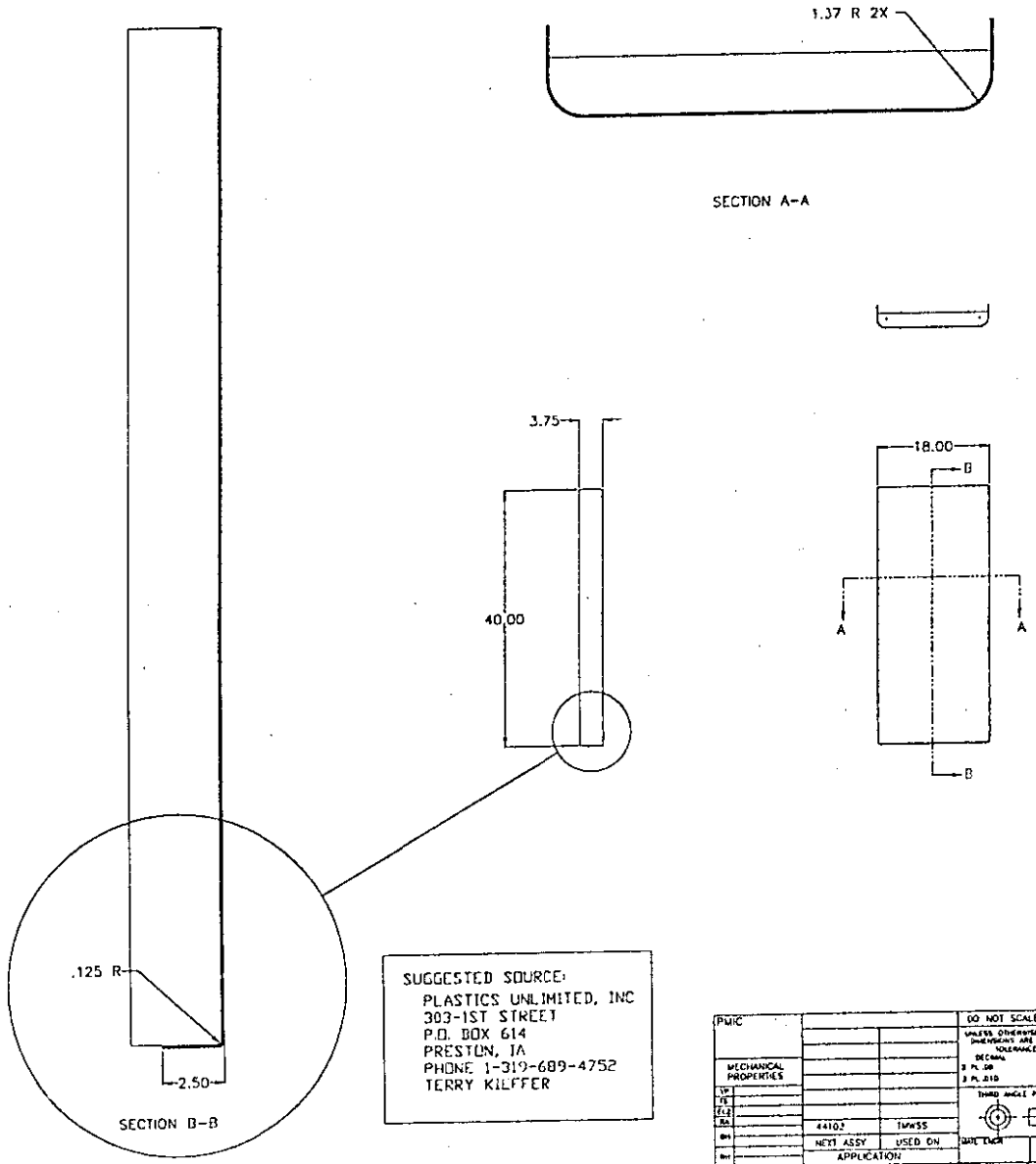

SUGGESTED SOURCE:
PLASTICS UNLIMITED, INC
303-1ST STREET
P.O. BOX 614
PRESTON, IA
PHONE 1-319-689-4752
TERRY KIEFFER

PART NO. 44102VF9

END PANEL, ENCLOSURE
LEFT & RIGHT SIDE, FRONT

SIZE	CAGE CODE	
F	59678	44102VF9

DISTRIBUTION STATEMENT A. APPROVED FOR PUBLIC RELEASE; DISTRIBUTION IS UNLIMITED.

NOTES:

1. APPLICABLE STANDARDS/SPECIFICATIONS
   A MIL-STD-100
   B ANSI Y14.5M-1982
2. MATERIAL: KYDEX, PLASTIC SHEET .18 MINIMUM THICKNESS AFTER FORMING. SHAPE BY HOT VACUUM FORM PROCESS, (4) PCS REQ'D.
3. FINISH: NONE

CAD MAINTAINED. CHANGES SHALL BE INCORPORATED BY THE DESIGN ACTIVITY.

SUGGESTED SOURCE:
PLASTICS UNLIMITED, INC
303-1ST STREET
P.O. BOX 614
PRESTON, IA
PHONE 1-319-689-4752
TERRY KIEFFER

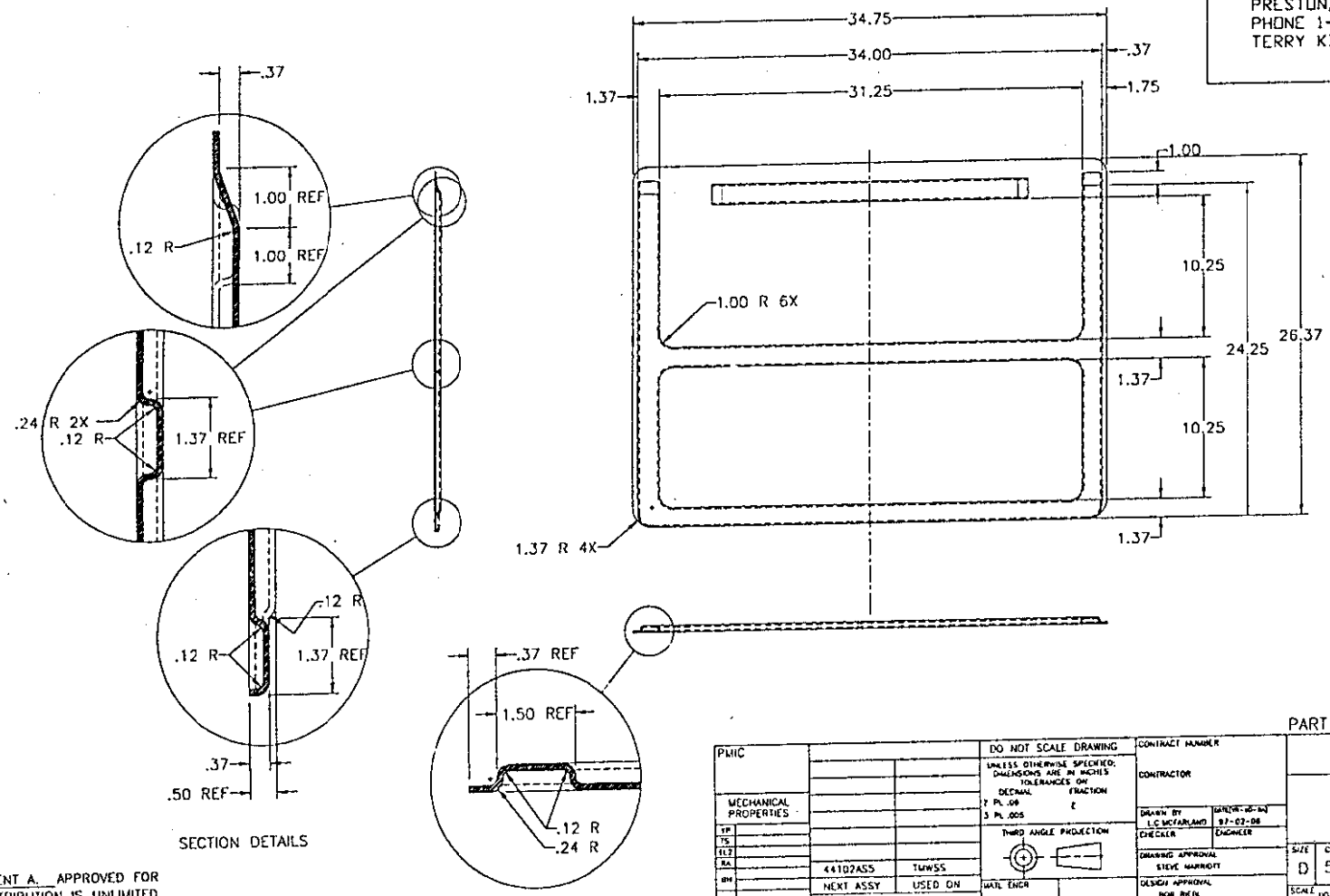

PART NO. 44102V10

PMIC		DO NOT SCALE DRAWING	CONTRACT NUMBER
MECHANICAL PROPERTIES		UNLESS OTHERWISE SPECIFIED: DIMENSIONS ARE IN INCHES TOLERANCES ON DECIMAL 2 PL .06 3 PL .005 FRACTION ±	CONTRACTOR
YP		THIRD ANGLE PROJECTION	DRAWN BY L.C. MCFARLAND DATE 97-02-06
TS			CHECKER ENGINEER
EL2			DRAWING APPROVAL STEVE MARRIOTT
RA	44102AS5	TMWSS	DESIGN APPROVAL BOB RIEDL
BH	NEXT ASSY	USED ON	MATL ENGR
RH	APPLICATION		

DEPARTMENT OF THE ARMY
U.S. ARMY ARMAMENT RESEARCH, DEVELOPMENT AND ENGINEERING CENTER
ROCK ISLAND, ILLINOIS 61299-7300

SIDE DOOR, PANEL

SIZE	CAGE CODE	
D	59678	44102V10
SCALE DO NOT	UNIT WT	SHEET

DISTRIBUTION STATEMENT A. APPROVED FOR PUBLIC RELEASE; DISTRIBUTION IS UNLIMITED.