NOTES:

1. APPLICABLE STANDARDS/SPECIFICATIONS
   A MIL-STD-100
   B ANSI Y14.5M-1982
2. MATERIAL: SAE E-4130, .50 DIA ROUND STOCK
   COLD FINISHED, NORMALIZED & ANNEALED TO 600 DEG F.
3. TWO PCS REQUIRED, 20 TO 21 FT LG.
4. BREAK OR ROUND OFF SHARP ENDS .060 R
5. FINISH: NONE

CAD MAINTAINED. CHANGES SHALL BE INCORPORATED BY THE DESIGN ACTIVITY.

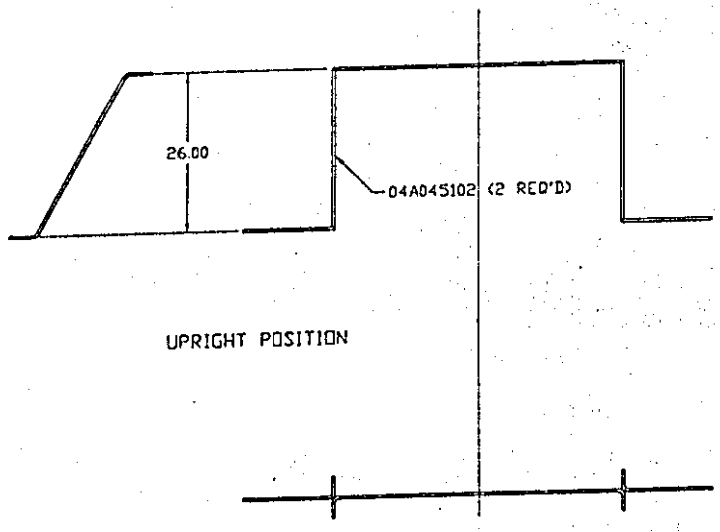

UPRIGHT POSITION

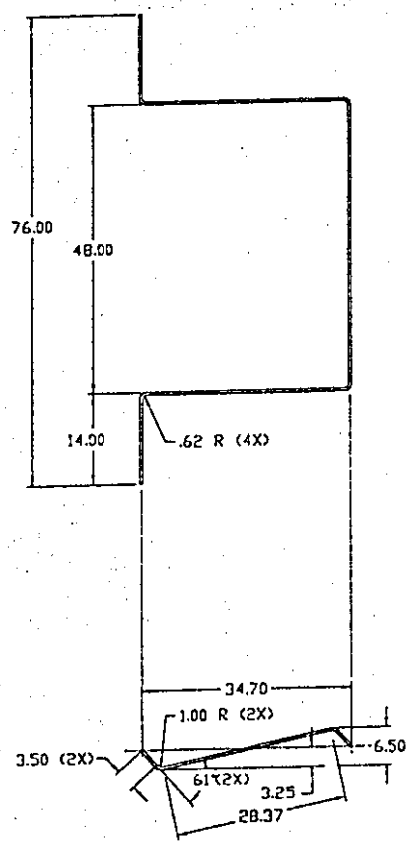

HORIZONTAL AT REST POSITION

PART NO. 04A045102

PMIC		DO NOT SCALE DRAWING	CONTRACT NUMBER
MECHANICAL PROPERTIES		UNLESS OTHERWISE SPECIFIED: DIMENSIONS ARE IN INCHES TOLERANCES ON DECIMAL FRACTION	CONTRACTOR
		THIRD ANGLE PROJECTION	DRAWN BY L.C.MCFARLAND 07-01-15
			CHECKER ENGINEER
	04A045107	TMWSS	DRAWING APPROVAL STEVE MARRIOTT
	NEXT ASSY	USED ON	DESIGN APPROVAL BOB NEIL
	APPLICATION		MAT'L ENGR

DEPARTMENT OF THE ARMY
U.S. ARMY ARMAMENT RESEARCH, DEVELOPMENT AND ENGINEERING CENTER
ROCK ISLAND, ILLINOIS 61299-7300

SUPPORT ARMS FOR THE TMWSS CAP

SIZE	CAGE CODE	
D	59678	04A045102

SCALE DO NOT UNIT WT. 6.32 LB EA SHEET

DISTRIBUTION STATEMENT A. APPROVED FOR PUBLIC RELEASE; DISTRIBUTION IS UNLIMITED.

NOTES:

1. APPLICABLE STANDARDS/SPECIFICATIONS
   A MIL-STD-100
   B ANSI Y14.5M-1982
2. MATERIAL: NYLON 6,6 OR DELRIN PLASTIC BLOCKS, 1-1/2" X 1-1/2" X 5" LG.
3. (14) PIECES ARE REQUIRED.
4. SUGGESTED SOURCE: COPE PLASTICS, ROCK ISLAND, IL.
5. FINISH: NONE

CAD MAINTAINED. CHANGES SHALL BE INCORPORATED BY THE DESIGN ACTIVITY.

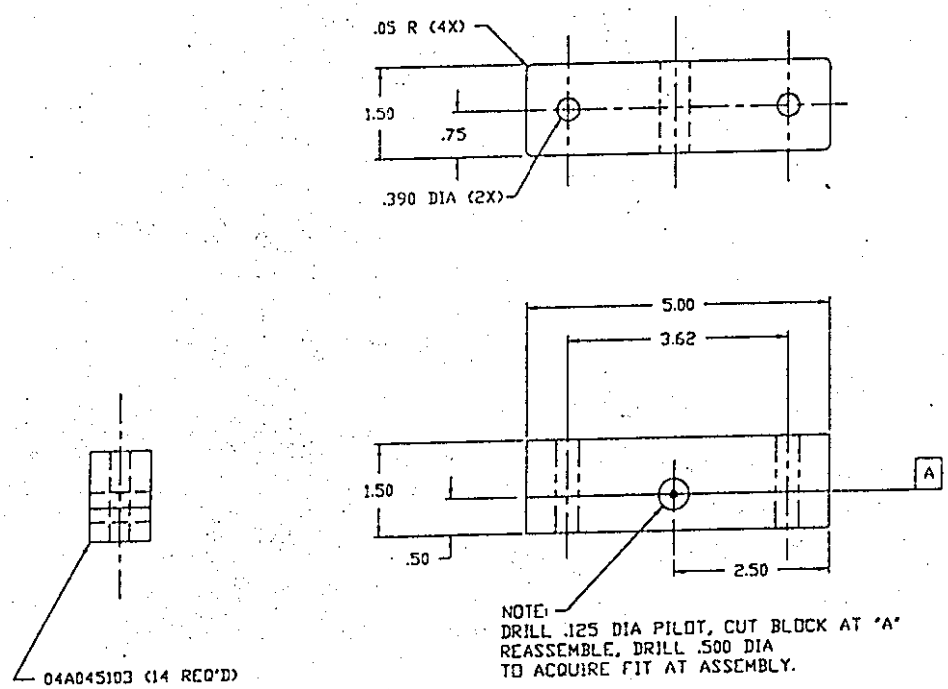

PART NO. 04A045103

PMIC	DO NOT SCALE DRAWING	CONTRACT NUMBER	DEPARTMENT OF THE ARMY U.S. ARMY ARMAMENT RESEARCH, DEVELOPMENT AND ENGINEERING CENTER ROCK ISLAND, ILLINOIS 61299-7300
MECHANICAL PROPERTIES	UNLESS OTHERWISE SPECIFIED DIMENSIONS ARE IN INCHES TOLERANCES ON DECIMAL FRACTION 2 PL .06 3 PL .005	CONTRACTOR	PIVOT BLOCK
	THIRD ANGLE PROJECTION	DRAWN BY L.C. MCFARLAND	SIZE D · CAGE CODE 59678 · 04A045103
04A045100 · TMWSS		CHECKER · ENGINEER	
NEXT ASSY · USED ON		DRAWING APPROVAL STEVE MARRIOTT	
APPLICATION	MATL ENGR	DESIGN APPROVAL BOB RIEDL	SCALE DO NOT · UNIT WT. · SHEET

DISTRIBUTION STATEMENT A. APPROVED FOR PUBLIC RELEASE; DISTRIBUTION IS UNLIMITED.

CAD MAINTAINED. CHANGES SHALL BE INCORPORATED BY THE DESIGN ACTIVITY.

NOTES:

1. APPLICABLE STANDARDS/SPECIFICATIONS
   A MIL-STD-100
   B ANSI Y14.5M-1982
2. MATERIAL: SAE 1020 STEEL PLATE, .150 THK (9 GA) 5" X 26.5" LG.
3. (2) PIECES EACH SIDE REQUIRED
4. BREAK ALL SHARP EDGES .015 +.010
5. FINISH: PRIME PAINT

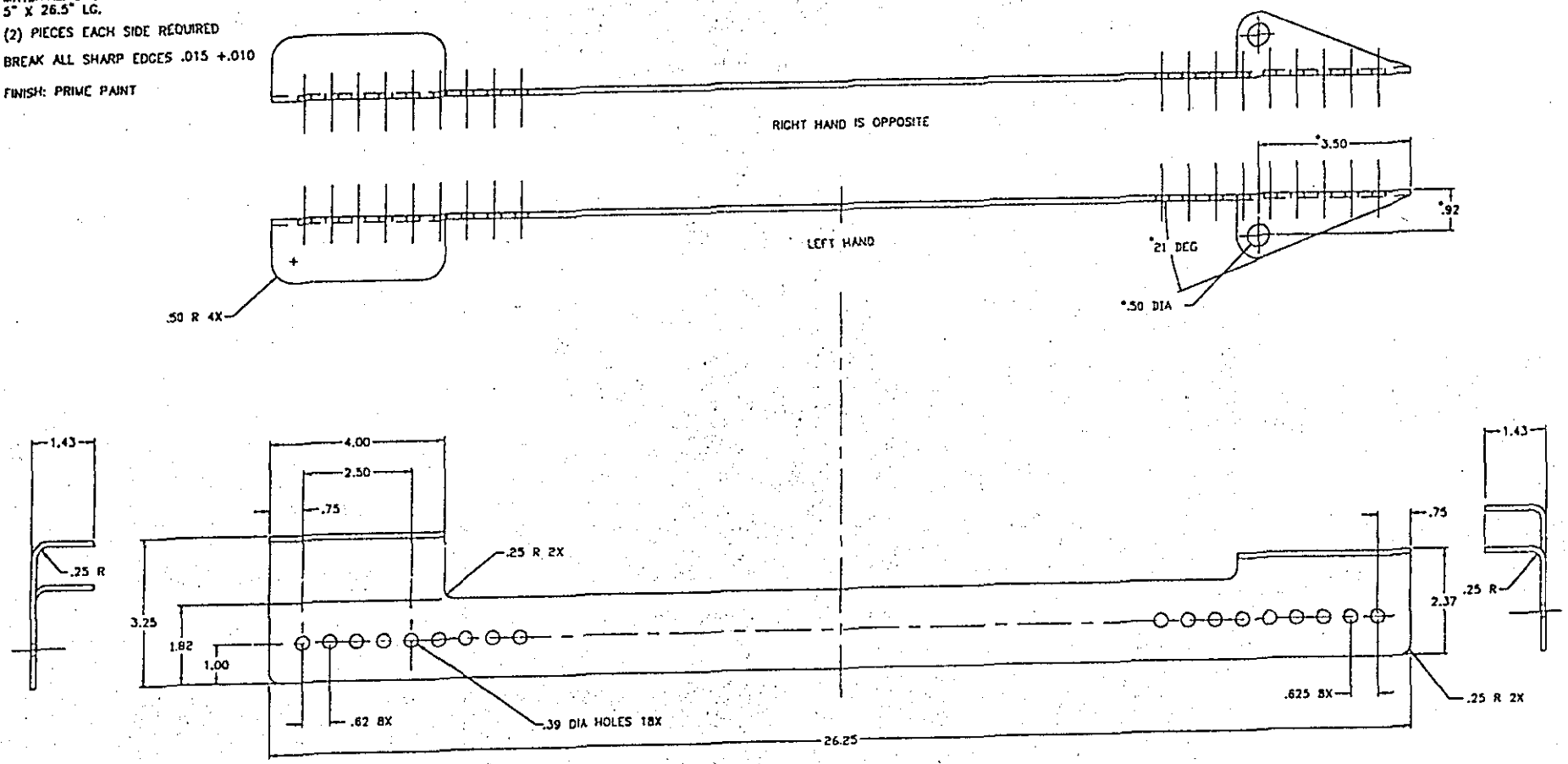

PART NO. 04A045104

PMIC	DO NOT SCALE DRAWING	CONTRACT NUMBER	SPRING STOP
MECHANICAL PROPERTIES	UNLESS OTHERWISE SPECIFIED DIMENSIONS ARE IN INCHES TOLERANCES ON DECIMAL FRACTION	CONTRACTOR	
	THIRD ANGLE PROJECTION	DRAWN BY L.C.MCFARLAND	
		CHECKER	ENGINEER
		DRAWING APPROVAL STEVE MARRIOTT	
		DESIGN APPROVAL	
04A045105	TMWSS		SIZE F · CAGE CODE 59678 · 04A045104
NEXT ASSY	USED ON		
APPLICATION			

DISTRIBUTION STATEMENT A. APPROVED FOR PUBLIC RELEASE; DISTRIBUTION IS UNLIMITED.

NOTES:

1. APPLICABLE STANDARDS/SPECIFICATIONS
   A MIL-STD-100
   B ANSI Y14.5M-1982
2. MATERIAL: MACHINE BOLTS, 3/8" DIA X 2" LG. WITH ELASTIC LOCK NUTS, ALL STAINLESS GRADE 3.

CAD MAINTAINED. CHANGES SHALL BE INCORPORATED BY THE DESIGN ACTIVITY.

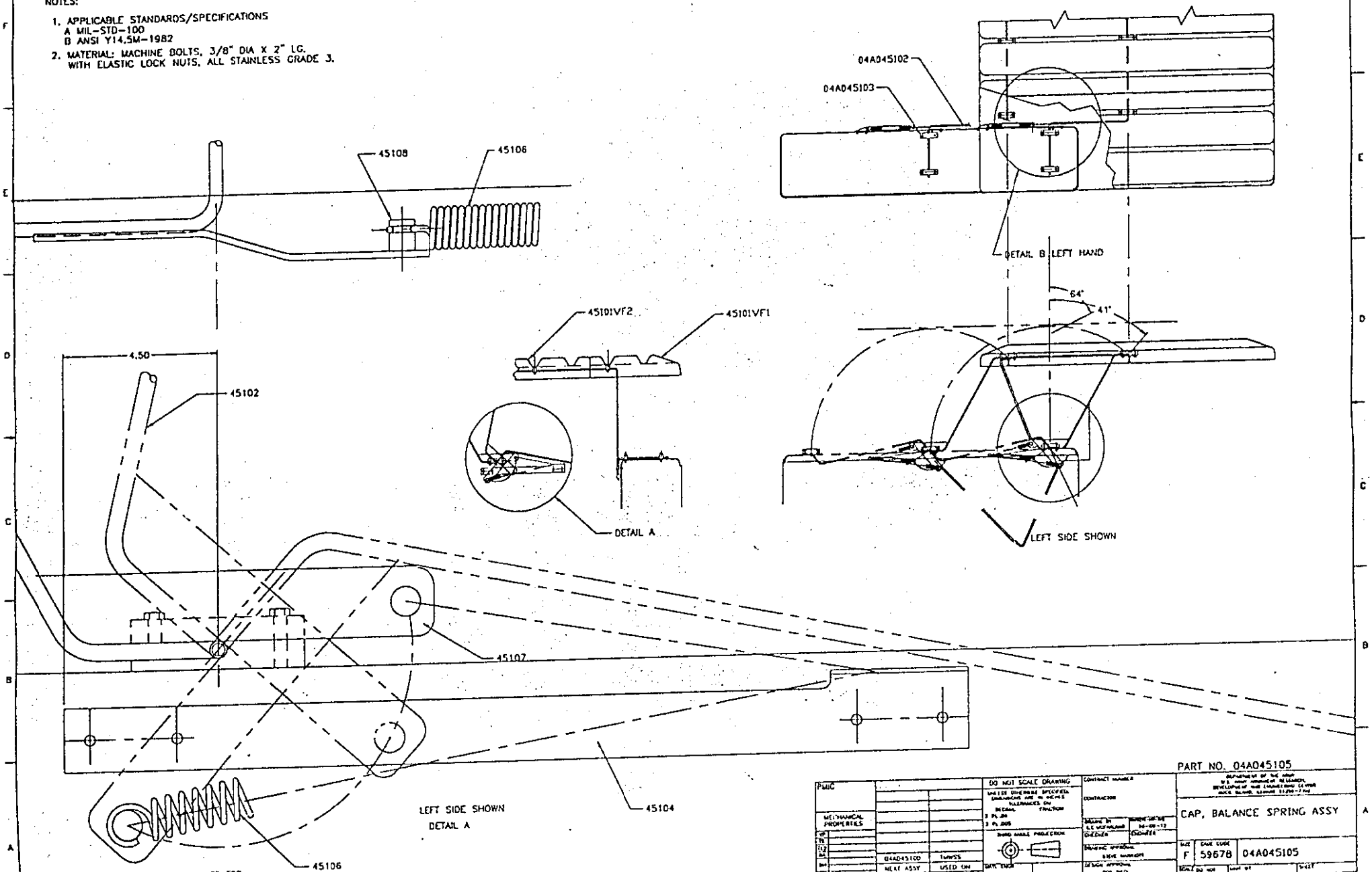

DISTRIBUTION STATEMENT A. APPROVED FOR PUBLIC RELEASE; DISTRIBUTION IS UNLIMITED.

PART NO. 04A045105

DO NOT SCALE DRAWING

CAP, BALANCE SPRING ASSY

F 59678 04A045105

NOTES:

1. APPLICABLE STANDARDS/SPECIFICATIONS
   A MIL-STD-100
   B ANSI Y14.5M-1982
2. MATERIAL: MUSIC WIRE, .171 DIA OIL TEMPERED, PER ASTM 229
3. FINISH: PHOSPHATE COATED

CAD MAINTAINED. CHANGES SHALL BE INCORPORATED BY THE DESIGN ACTIVITY.

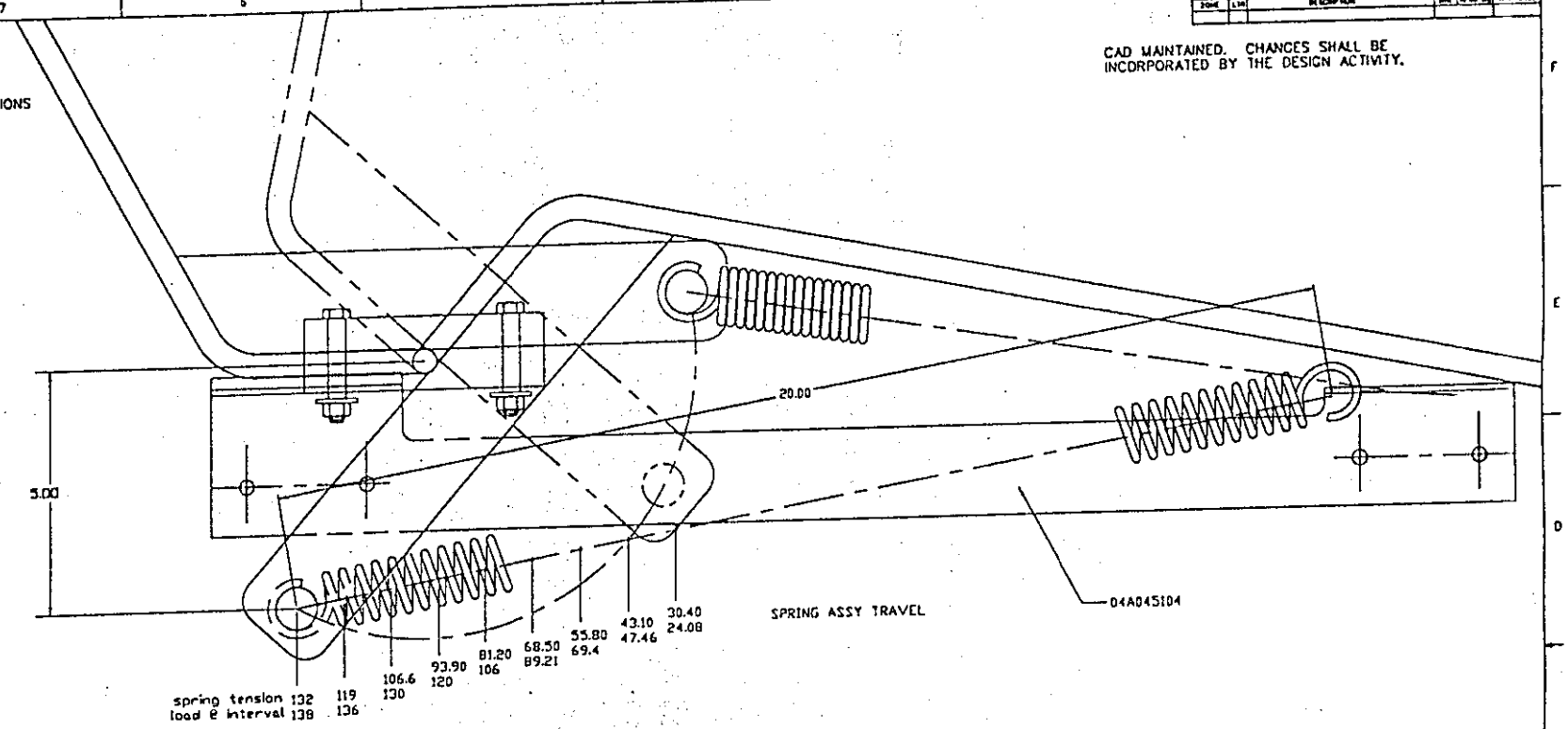

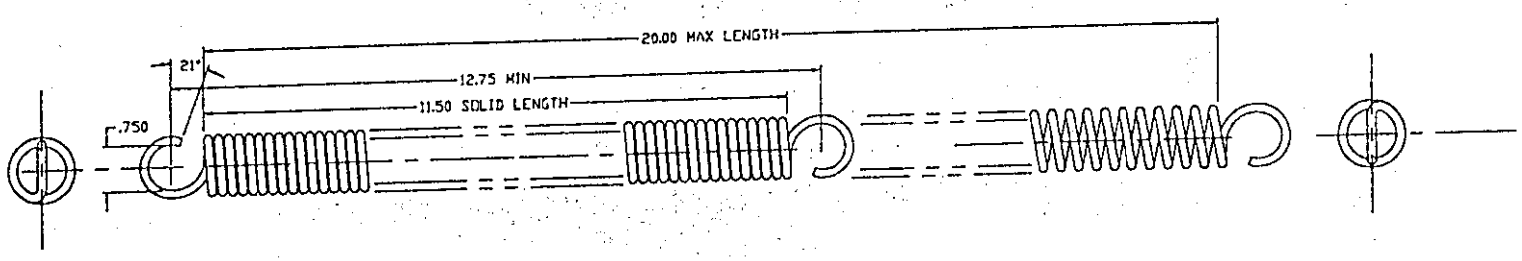

EXTENSION SPRING
(2 REQ'D)

SPRING DIMENSIONAL/PERFORMANCE REQUIREMENTS

OUTSIDE DIAMETER	1.00 INCHES
INSIDE DIAMETER	.950 INCHES
SOLID LENGTH	11.50 INCHES
MAX LENGTH	20.0 INCHES
WIRE DIAMETER	.171 INCHES
LOAD @ SOLID LENGTH	22.7 LBS
LOAD @ MAX LENGTH	132. LBS
NUMBER OF TURNS	67.2
MAXIMUM STRESS	97750 PSI
RATE LB/IN	12.71 LBS/IN

PART NO. 04A045106

BALANCE SPRING

F 59678 04A045106

DISTRIBUTION STATEMENT A. APPROVED FOR PUBLIC RELEASE; DISTRIBUTION IS UNLIMITED.

NOTES:

1. APPLICABLE STANDARDS/SPECIFICATIONS
   A MIL-STD-100
   B ANSI Y14.5M-1982
   C ANSI/AWS A2.4 AND A3.0 (WELDING)
2. MATERIAL: E- 4130 STEEL BAR, .250 THICKNESS X 2" X 12" LG.
3. TWO SETS REQUIRED.
4. PRESS FIT 45108 INTO 45107 PRIOR TO WELDING REQUIRES 700 LBS +/- 50 LBS
5. BREAK ALL EXPOSED EDGES .015 +.01

CAD MAINTAINED. CHANGES SHALL BE INCORPORATED BY THE DESIGN ACTIVITY.

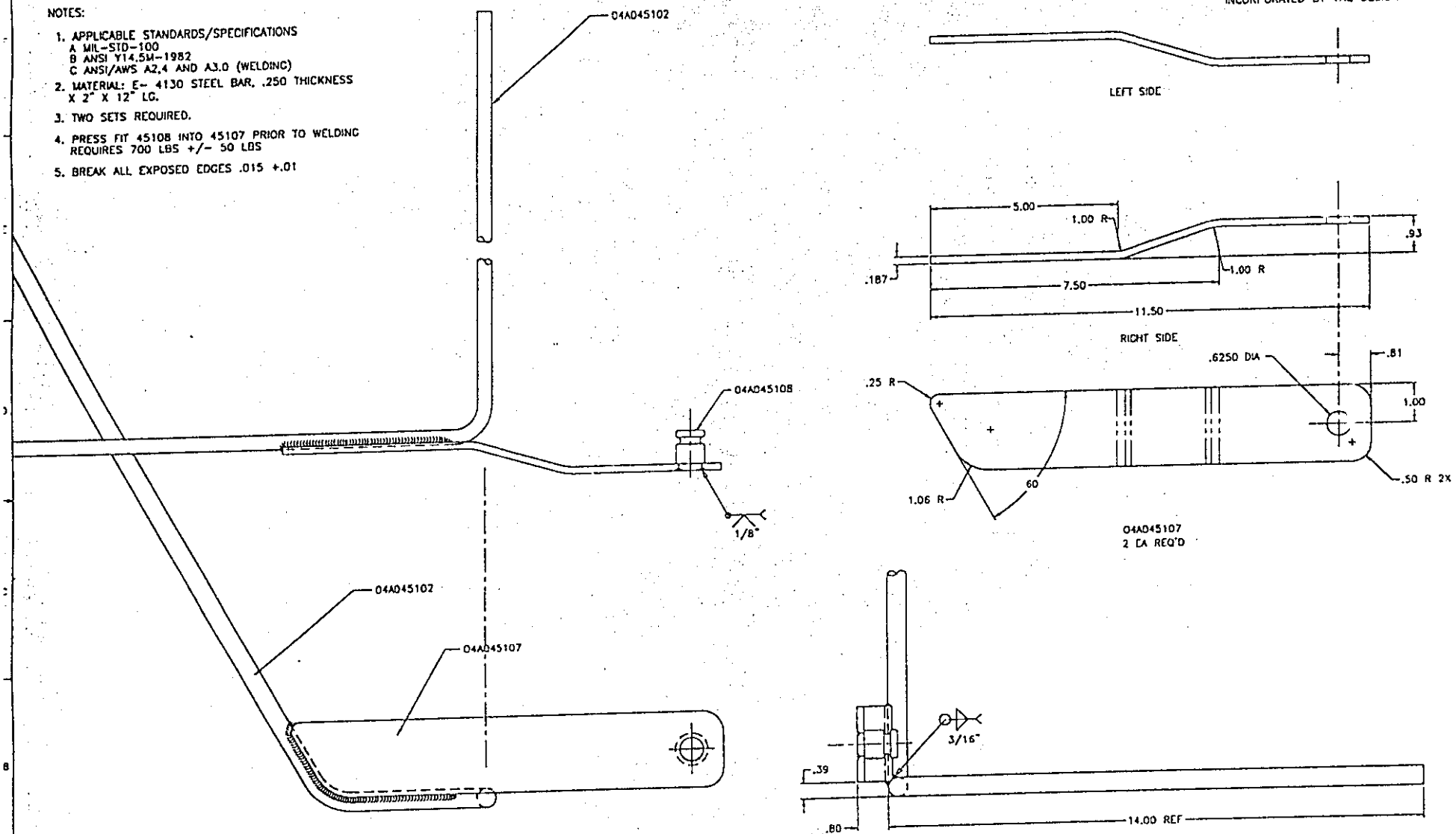

PART NO. 04A045107

BAR, BALANCE SPRING ASSY

F 59678 04A045107

SHEET 1 OF 3

DO NOT SCALE DRAWING

NEXT ASSY USED ON

APPLICATION

DISTRIBUTION STATEMENT A. APPROVED FOR PUBLIC RELEASE; DISTRIBUTION IS UNLIMITED.

REVISIONS				
ZONE	LTR	DESCRIPTION	DATE (YR-MO-DA)	APPROVED

CAD MAINTAINED. CHANGES SHALL BE INCORPORATED BY THE DESIGN ACTIVITY.

NOTES:

1. APPLICABLE STANDARDS/SPECIFICATIONS
   A MIL-STD-100
   B ANSI Y14.5M-1982
2. WELDMENT REQUIRES STRAIGHTENING ROUND STOCK AFTER RECONSTITUTING 4130 HT.
3. FINISH: PHOSPHATE, BLACK

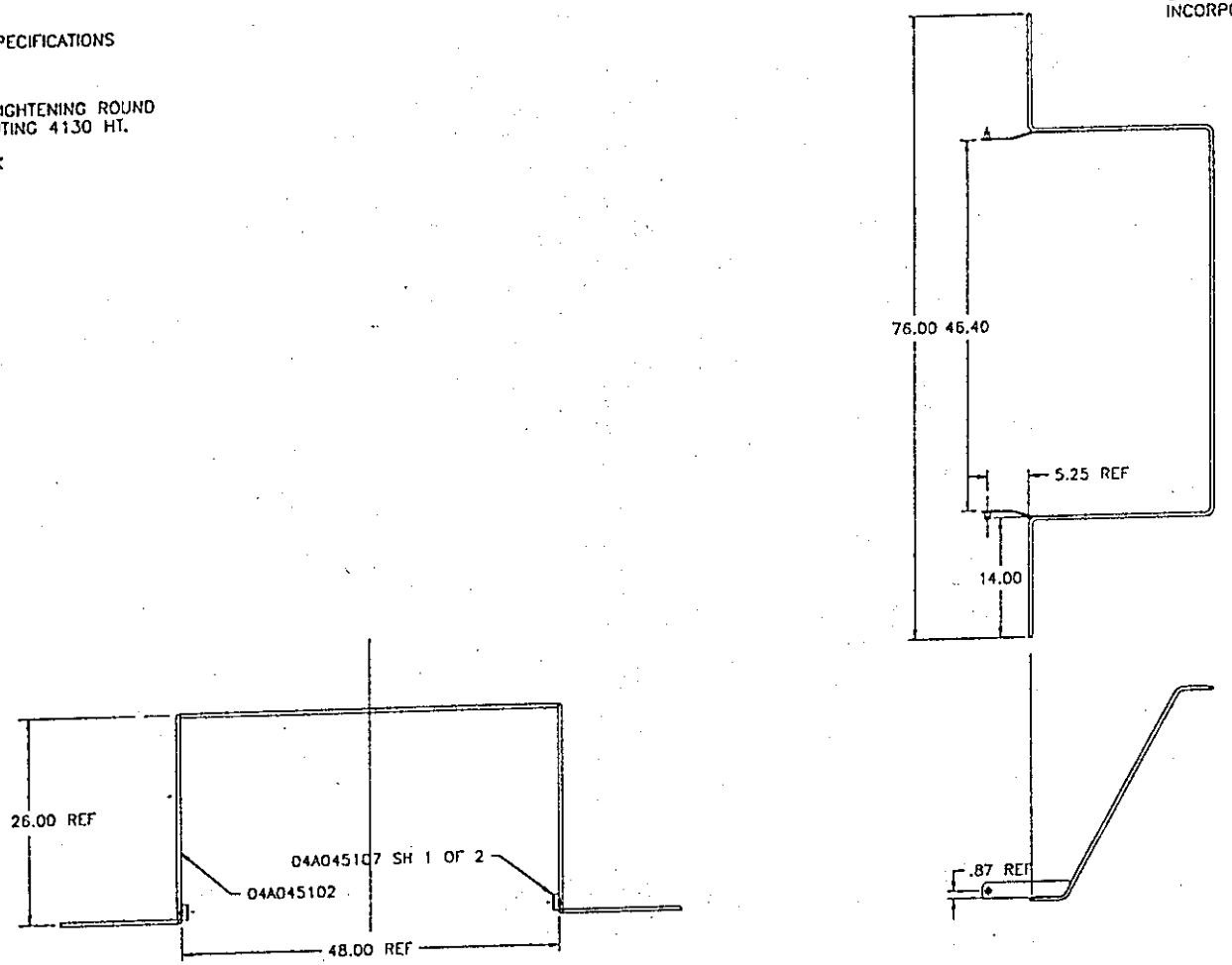

PART NO. 04A045102

PMIC		DO NOT SCALE DRAWING	CONTRACT NUMBER
MECHANICAL PROPERTIES		UNLESS OTHERWISE SPECIFIED: DIMENSIONS ARE IN INCHES. TOLERANCES ON DECIMAL 2 PL .06, 3 PL .005; FRACTION ±	CONTRACTOR
YP		THIRD ANGLE PROJECTION	DRAWN BY L.C. MCFARLAND 96-09-12
TS			CHECKER / ENGINEER
EL			DRAWING APPROVAL STEVE MARBOTT
RA	04A045100	EMWSS	DESIGN APPROVAL BOB REDL
BH	NEXT ASSY	USED ON	
RH	APPLICATION	MATL CHGA	

DEPARTMENT OF THE ARMY
U.S. ARMY ARMAMENT RESEARCH, DEVELOPMENT AND ENGINEERING CENTER
ROCK ISLAND, ILLINOIS 61299-7300

BAR, BALANCE SPRING ASSY (CONT'D)

SIZE	CAGE CODE	
D	59678	04A045107
SCALE DO NOT	UNIT WT. 0.37 LB EA	SHEET 2 of 3

DISTRIBUTION STATEMENT A. APPROVED FOR PUBLIC RELEASE; DISTRIBUTION IS UNLIMITED.

NOTES:

1. APPLICABLE STANDARDS/SPECIFICATIONS
   A MIL-STD-100
   B ANSI Y14.5M-1982
2. WELDMENT REQUIRES STRAIGHTENING ROUND STOCK AFTER WELDING
3. FINISH: NONE

CAD MAINTAINED. CHANGES SHALL BE INCORPORATED BY THE DESIGN ACTIVITY.

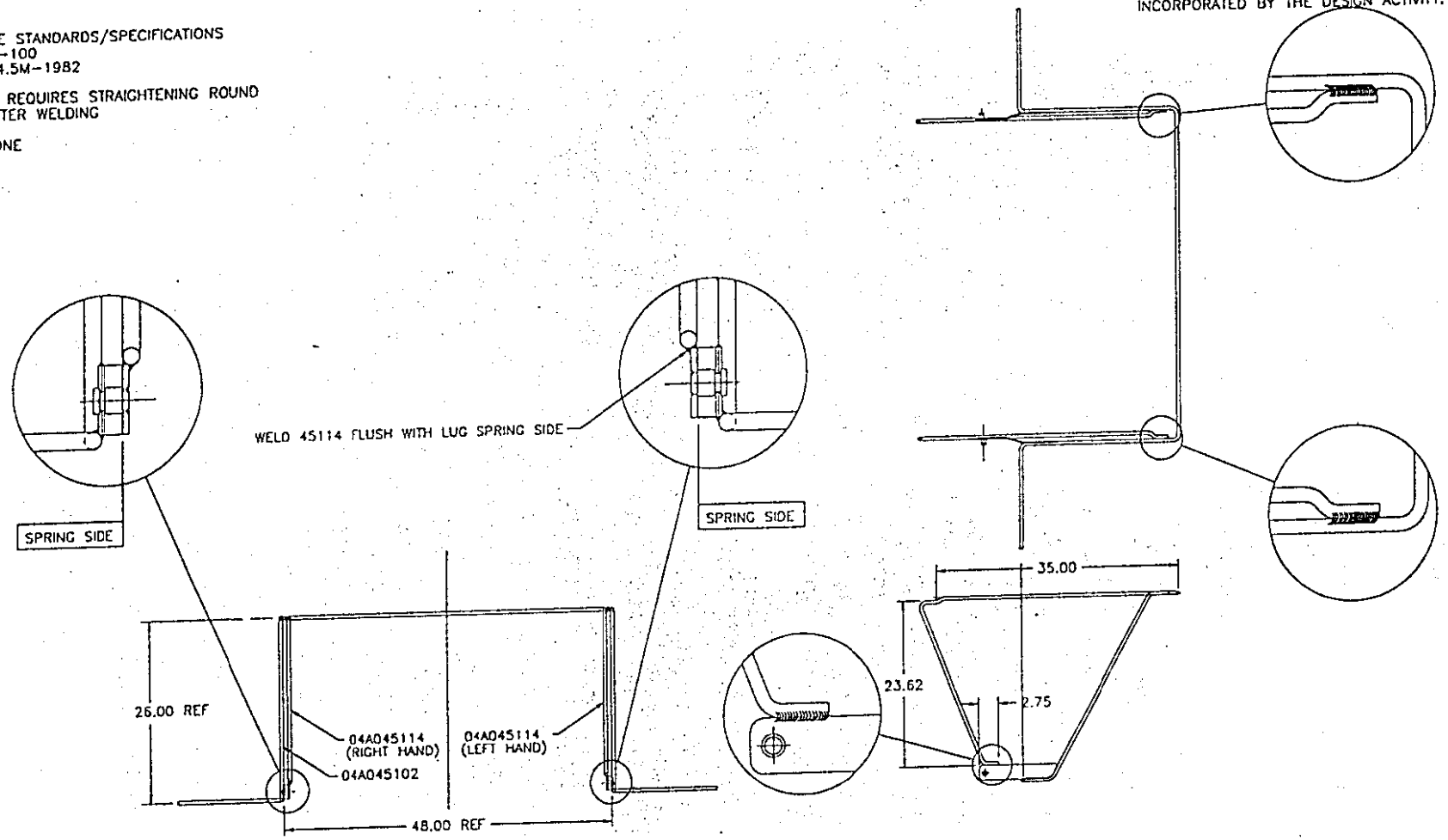

PART NO. 04A045102

PMIC	DO NOT SCALE DRAWING	CONTRACT NUMBER	DEPARTMENT OF THE ARMY U.S. ARMY ARMAMENT RESEARCH, DEVELOPMENT AND ENGINEERING CENTER ROCK ISLAND, ILLINOIS 61299-7300
MECHANICAL PROPERTIES	UNLESS OTHERWISE SPECIFIED: DIMENSIONS ARE IN INCHES TOLERANCES ON DECIMAL FRACTION 2 PL .06 E 3 PL .005	CONTRACTOR	BAR, BALANCE SPRING ASSY (CONT'D)
YP / TS / EL2 / RA / BH / RH	THIRD ANGLE PROJECTION	DRAWN BY L.E.MCFARLAND 97-09-12 / CHECKER / ENGINEER	SIZE D / CAGE CODE 59678 / 04A045107
04A045100 / TMWSS		DRAWING APPROVAL STEVE MARRIOTT	SCALE DO NOT / UNIT WT. 0.32 LB EA / SHEET 3 of 3
NEXT ASSY / USED ON	MATL ENGR	DESIGN APPROVAL BOB RIEDL	
APPLICATION			

DISTRIBUTION STATEMENT A. APPROVED FOR PUBLIC RELEASE: DISTRIBUTION IS UNLIMITED.

REVISIONS				
ZONE	LTR	DESCRIPTION	DATE (YR-MO-DA)	APPROVED

CAD MAINTAINED. CHANGES SHALL BE INCORPORATED BY THE DESIGN ACTIVITY.

NOTES:

1. APPLICABLE STANDARDS/SPECIFICATIONS
   A MIL-STD-100
   B ANSI Y14.5M-1982

2. MATERIAL: ROUND STOCK, SAE 1020 STEEL, .75 DIA X 12".

3. TWO REQUIRED

4. FINISH: NONE

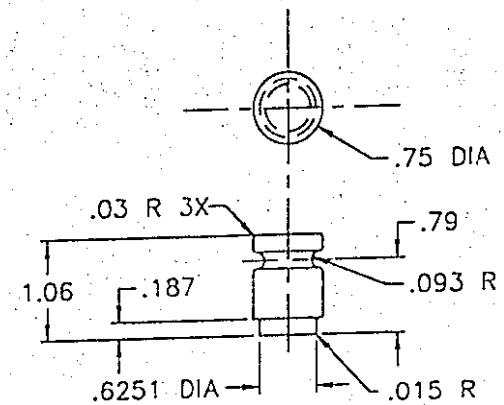

PART NO. 04A045108

DISTRIBUTION STATEMENT A.
APPROVED FOR PUBLIC RELEASE;
DISTRIBUTION IS UNLIMITED.

PMIC		DO NOT SCALE DRAWING	CONTRACT NUMBER
MECHANICAL PROPERTIES		UNLESS OTHERWISE SPECIFIED: DIMENSIONS ARE IN INCHES TOLERANCES ON DECIMAL 2 PL .05 3 PL .005 FRACTION ±	CONTRACTOR
YP		THIRD ANGLE PROJECTION	DRAWN BY L.C. MCFARLAND — DATE(YR-MO-DA) 97-01-21
YS			CHECKER — ENGINEER
EL2			DRAWING APPROVAL STEVE MARRIOTT
RA			
BH	04A044107 — TMWSS	MATL ENGR	DESIGN APPROVAL BOB RIEDL
RH	NEXT ASSY — USED ON		
	APPLICATION		

DEPARTMENT OF THE ARMY
U.S. ARMY ARMAMENT RESEARCH, DEVELOPMENT AND ENGINEERING CENTER
ROCK ISLAND, ILLINOIS 61299-7300

SPRING PIVOT

SIZE	CAGE CODE	
C	59678	04A045108
SCALE	UNIT WT.	SHEET

NOTES:

1. APPLICABLE STANDARDS/SPECIFICATIONS
   A MIL-STD-100
   B ANSI Y14.5M-1982
2. BOLT ASSEMBLY: LOCATE HOLES AND MATCH DRILL THE PANELS FOR ASSEMBLY.
3. TARGET WEIGHT 36 LBS PLUS HARDWARE.

CAD MAINTAINED. CHANGES SHALL BE INCORPORATED BY THE DESIGN ACTIVITY.

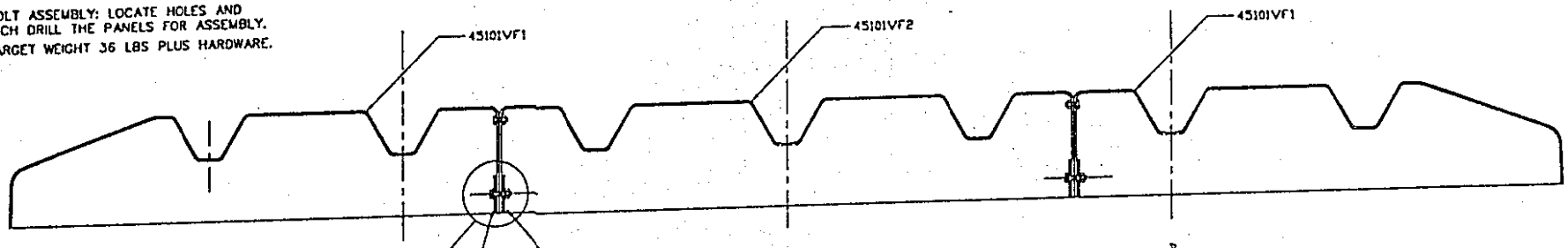

SECTION A-A

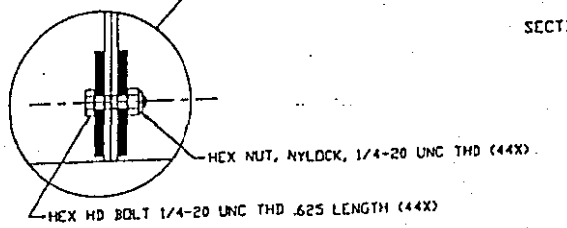

TENSION PLATE ASSY

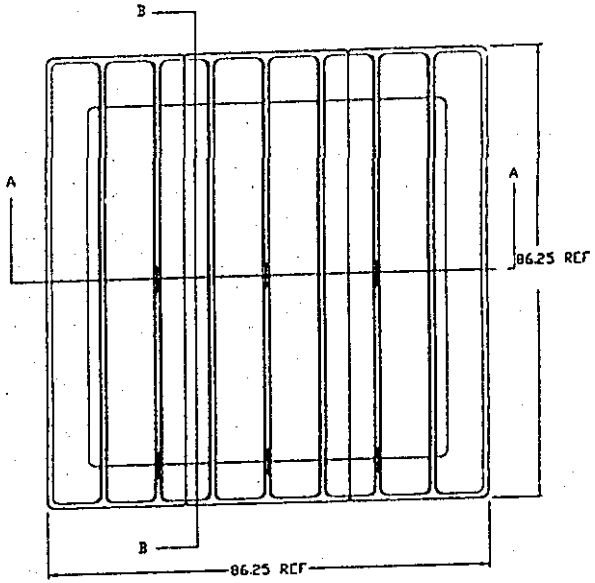

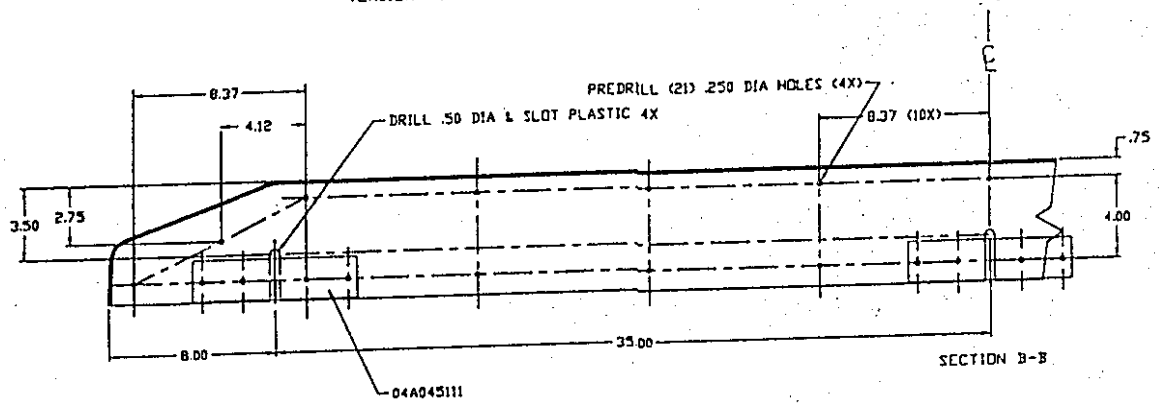

SECTION B-B

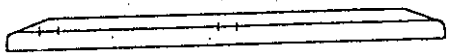

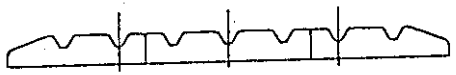

PART NO. 04A045109

PUBC	DO NOT SCALE DRAWING	CONTRACT NUMBER	DEPARTMENT OF THE ARMY U.S. ARMY ARMAMENT RESEARCH, DEVELOPMENT AND ENGINEERING CENTER
MECHANICAL PROPERTIES	UNLESS OTHERWISE SPECIFIED DIMENSIONS ARE IN INCHES TOLERANCES ON DECIMAL ± FRACTION ± ANGLE	CONTRACTOR	CAP, ASSEMBLY OF CENTER TO LEFT & RIGHT SECTIONS
	THIRD ANGLE PROJECTION	DRAWN BY L.C.MCFARLAND / DAGGER	DATE 87-07-23 / ENGINEER
		DRAWING APPROVAL STEVE HARRIOTT	SIZE F / CAGE CODE 59678 / 04A045109
TWNSS		DESIGN APPROVAL BOB REIA	SCALE DO NOT / UNIT WT. / SHEET
NEXT ASSY / USED ON			
APPLICATION			

DISTRIBUTION STATEMENT A. APPROVED FOR PUBLIC RELEASE; DISTRIBUTION IS UNLIMITED.

CAD MAINTAINED. CHANGES SHALL BE INCORPORATED BY THE DESIGN ACTIVITY.

NOTES:

1. APPLICABLE STANDARDS/SPECIFICATIONS
   A MIL-STD-100
   B ANSI Y14.5M-1982
2. MATERIAL: TOP ASSY, (2) 3/16" X 2" X 72", 6061 ALUMINUM BAR, (20) 5056 ALUMINUM POP RIVETS, PROTRUDING HEAD, OPEN BODY TYPE PER DRAWING NO. 04A044107-2 & (20) POP RIVET WASHERS, FLAT, .050 THICK X .25 ID X .50 OD.
3. REMOVE ALL SHARP EDGES AND CORNERS .015 +.015.

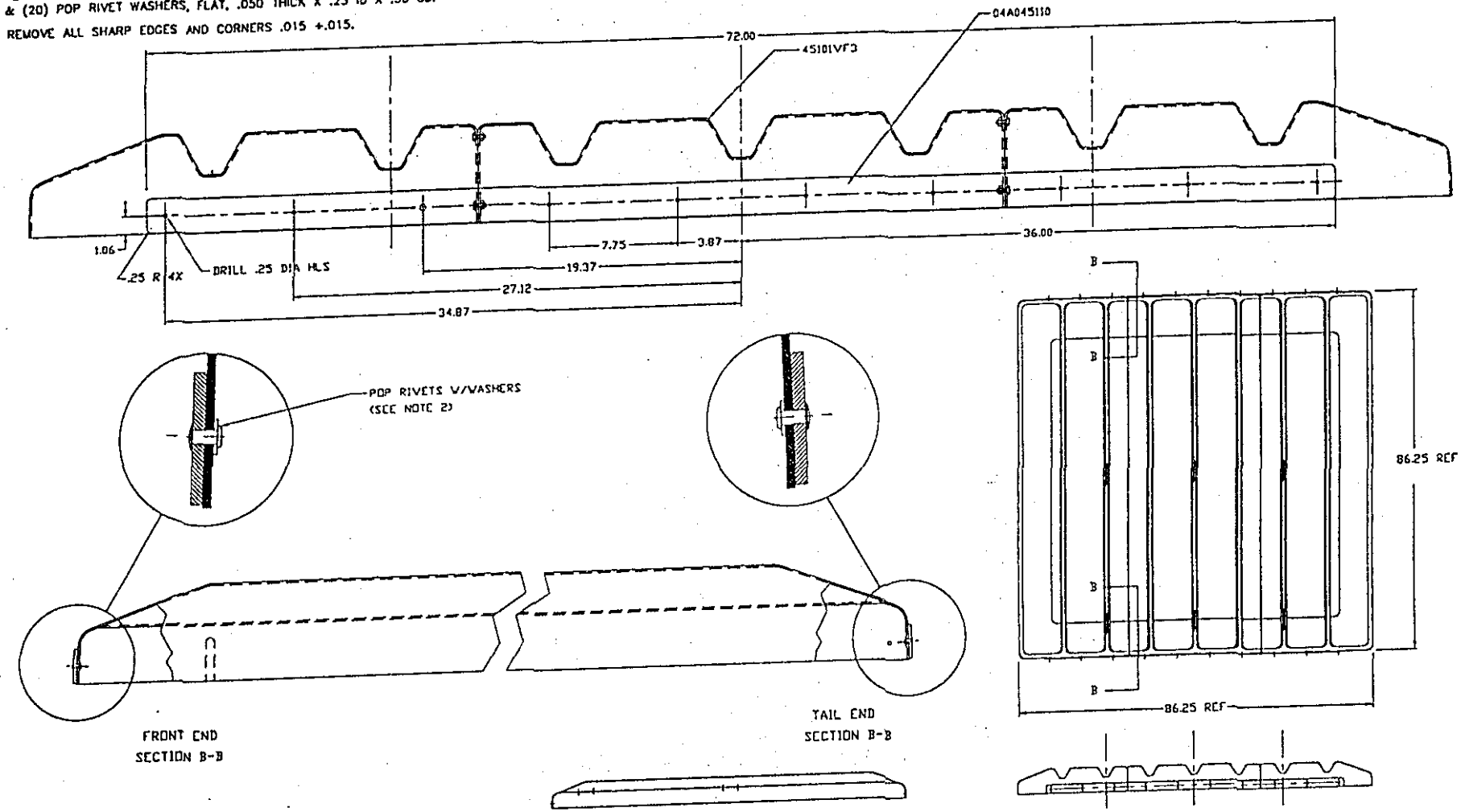

PART NO. 04A045110

ASSEMBLY, END PLATE TO TOP CAP

F 59678 04A045110

DISTRIBUTION STATEMENT A. APPROVED FOR PUBLIC RELEASE; DISTRIBUTION IS UNLIMITED.

REVISIONS				
ZONE	LTR	DESCRIPTION	DATE (YR-MO-DA)	APPROVED

CAD MAINTAINED. CHANGES SHALL BE INCORPORATED BY THE DESIGN ACTIVITY.

NOTES:

1. APPLICABLE STANDARDS/SPECIFICATIONS
   A MIL-STD-100
   B ANSI Y14.5M-1982
2. MATERIAL: ALUMINUM SHEET, 6061 ALLOY, .187 X 2" X 8".
3. (8) REQUIRED
4. FINISH: NONE

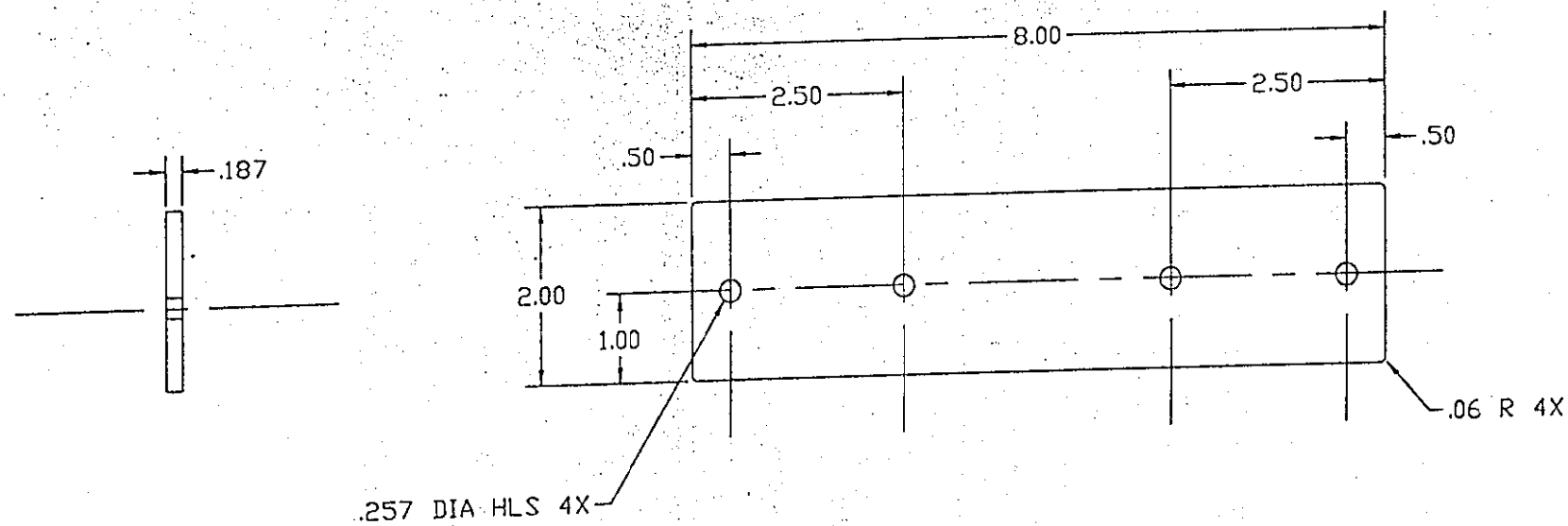

PART NO. 04A045111

DISTRIBUTION STATEMENT A.
APPROVED FOR PUBLIC RELEASE;
DISTRIBUTION IS UNLIMITED.

PMIC			
MECHANICAL PROPERTIES			
YP			
TS			
EL2			
RA			
BH	04A045109	TMWSS	
RH	NEXT ASSY	USED ON	
	APPLICATION		

DO NOT SCALE DRAWING

UNLESS OTHERWISE SPECIFIED: DIMENSIONS ARE IN INCHES
TOLERANCES ON
DECIMAL: 2 PL .06, 3 PL .005
FRACTION: ±

THIRD ANGLE PROJECTION

MATL ENGR

CONTRACT NUMBER

CONTRACTOR

DRAWN BY: L.C. MCFARLAND — DATE(YR-MO-DA): 97-01-21

CHECKER — ENGINEER

DRAWING APPROVAL: STEVE MARRIOTT

DESIGN APPROVAL: BOB RIEDL

DEPARTMENT OF THE ARMY
U.S. ARMY ARMAMENT RESEARCH, DEVELOPMENT AND ENGINEERING CENTER
ROCK ISLAND, ILLINOIS 61299-7300

TENSION PLATE

SIZE	CAGE CODE	
C	59678	04A045111
SCALE	UNIT WT.	SHEET

REVISIONS				
ZONE	LTR	DESCRIPTION	DATE (YR-MO-DA)	APPROVED

CAD MAINTAINED. CHANGES SHALL BE INCORPORATED BY THE DESIGN ACTIVITY.

NOTES:

1. APPLICABLE STANDARDS/SPECIFICATIONS
   A MIL-STD-100
   B ANSI Y14.5M-1982
   C ANSI/AWS A2.4 AND A3.0 (WELDING)
2. MATERIAL: ALUMINUM PLATE, 6061 ALLOY .125 THK X 5" X 15" LG.
3. (4) PIECES REQUIRED.
4. BREAK ALL SHARP CORNERS AND EDGES.
5. FINISH: ZINC CHROMATE PRIMER.

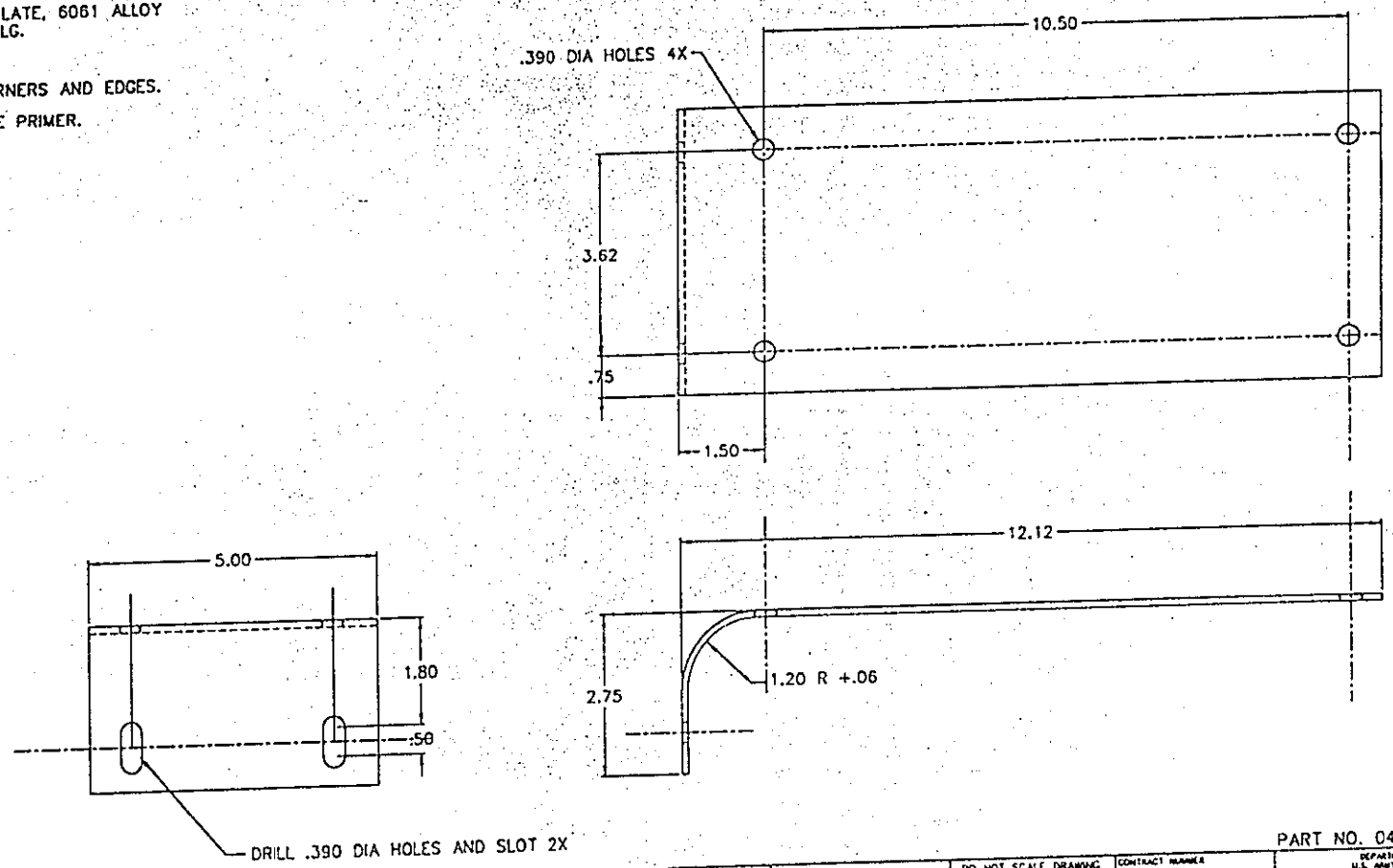

PART NO. 04A045112

PMIC	DO NOT SCALE DRAWING	CONTRACT NUMBER	DEPARTMENT OF THE ARMY U.S. ARMY ARMAMENT RESEARCH, DEVELOPMENT AND ENGINEERING CENTER ROCK ISLAND, ILLINOIS 61299-7300
MECHANICAL PROPERTIES	UNLESS OTHERWISE SPECIFIED: DIMENSIONS ARE IN INCHES TOLERANCES ON DECIMAL FRACTION 2 PL .04 3 PL .005	CONTRACTOR	LOAD PLATE ASSEMBLY FOR ADJUSTING SPRING TENSION
YP TS EL2 RA BH RH	THIRD ANGLE PROJECTION	DRAWN BY L.C. MCFARLAND DATE (YR-MO-DA) 97-07-20 CHECKER ENGINEER	SIZE D CAGE CODE 59678 04A045112
NEXT ASSY USED ON	MATL ENGR	DRAWING APPROVAL STEVE MARRIOT	SCALE UNIT WT. SHEET
APPLICATION		DESIGN APPROVAL BOB RIEDL	

DISTRIBUTION STATEMENT A. APPROVED FOR PUBLIC RELEASE; DISTRIBUTION IS UNLIMITED.

NOTES:

1. APPLICABLE STANDARDS/SPECIFICATIONS
   A MIL-STD-100
   B ANSI Y14.5M-1982
   C ANSI/AWS A2.4 AND A3.0 (WELDING)
2. POSITION PLATE AND ATTACH TO BOLTS FOR PIVOT BLOCKS, DRILL 2 HOLES FOR SIDE SLOTTED SPRING STOP. ADJUST STOP TO TENSION. TIGHTEN BOLTS TO SECURE SPRING.
3. LEFT SIDE SHOWN, RH IS OPPOSITE, (4) PIECES REQUIRED.

CAD MAINTAINED. CHANGES SHALL BE INCORPORATED BY THE DESIGN ACTIVITY.

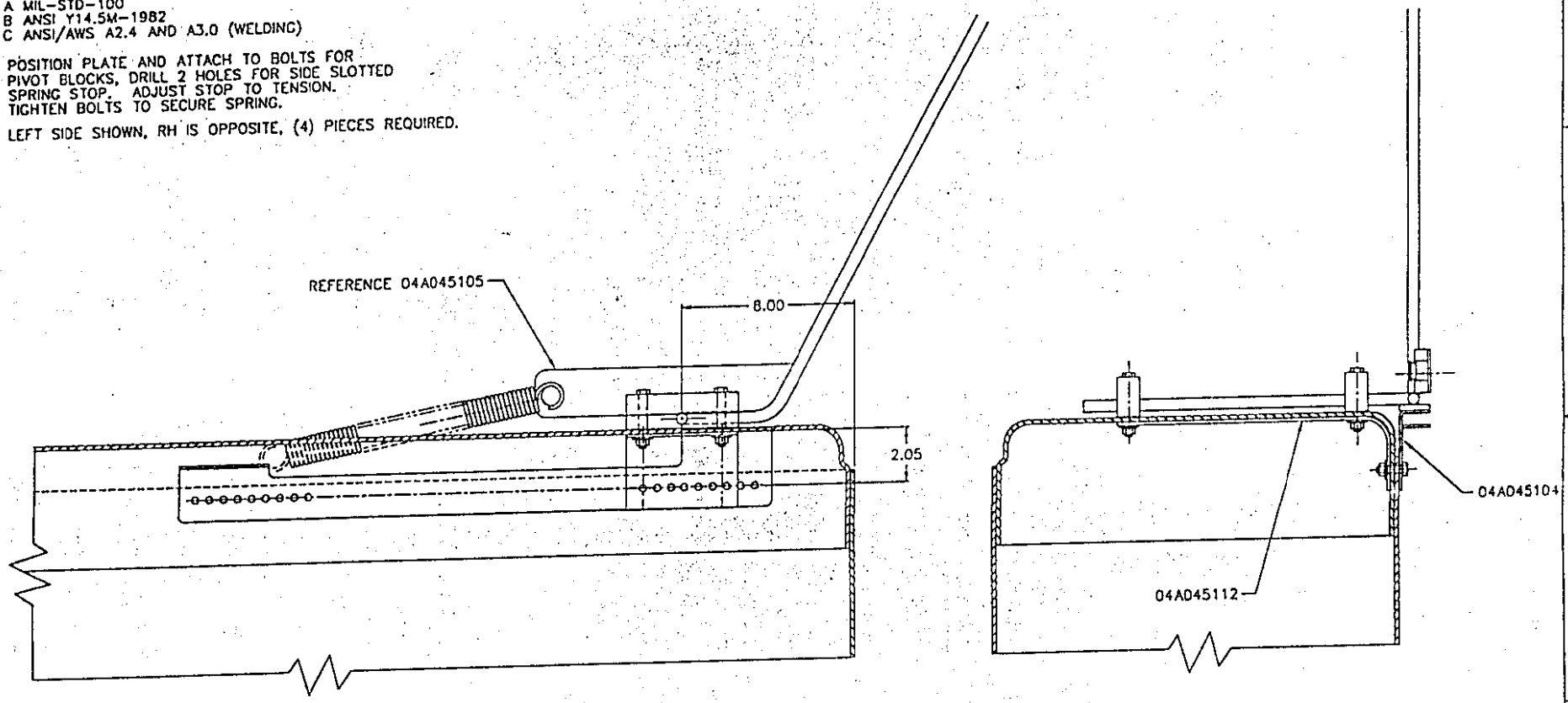

PART NO. 04A045113

PMIC		DO NOT SCALE DRAWING	CONTRACT NUMBER
MECHANICAL PROPERTIES		UNLESS OTHERWISE SPECIFIED: DIMENSIONS ARE IN INCHES TOLERANCES ON DECIMAL FRACTION	CONTRACTOR
		THIRD ANGLE PROJECTION	DRAWN BY L.C.MCFARLAND 91-02-20
			CHECKER ENGINEER
	04A045100	04A045112	DRAWING APPROVAL STEVE MARRIOTT
	NEXT ASSY	USED ON	DESIGN APPROVAL BOB RIEDL
	APPLICATION	MATL ENGR	

DEPARTMENT OF THE ARMY
U.S. ARMY ARMAMENT RESEARCH, DEVELOPMENT AND ENGINEERING CENTER
ROCK ISLAND, ILLINOIS 61299-7300

LOAD PLATE FOR ADJUSTING SPRING TENSION

SIZE	CAGE CODE	
D	59678	04A045113

SCALE | UNIT WT. | SHEET

DISTRIBUTION STATEMENT A. APPROVED FOR PUBLIC RELEASE; DISTRIBUTION IS UNLIMITED.

NOTES:

1. APPLICABLE STANDARDS/SPECIFICATIONS
   A MIL-STD-100
   B ANSI Y14.5M-1982
2. MATERIAL: SAE 4130, .50 DIA STEEL ROD, 62" LG.
   2 PCS REQUIRED.
3. FINISH: NONE

CAD MAINTAINED. CHANGES SHALL BE INCORPORATED BY THE DESIGN ACTIVITY.

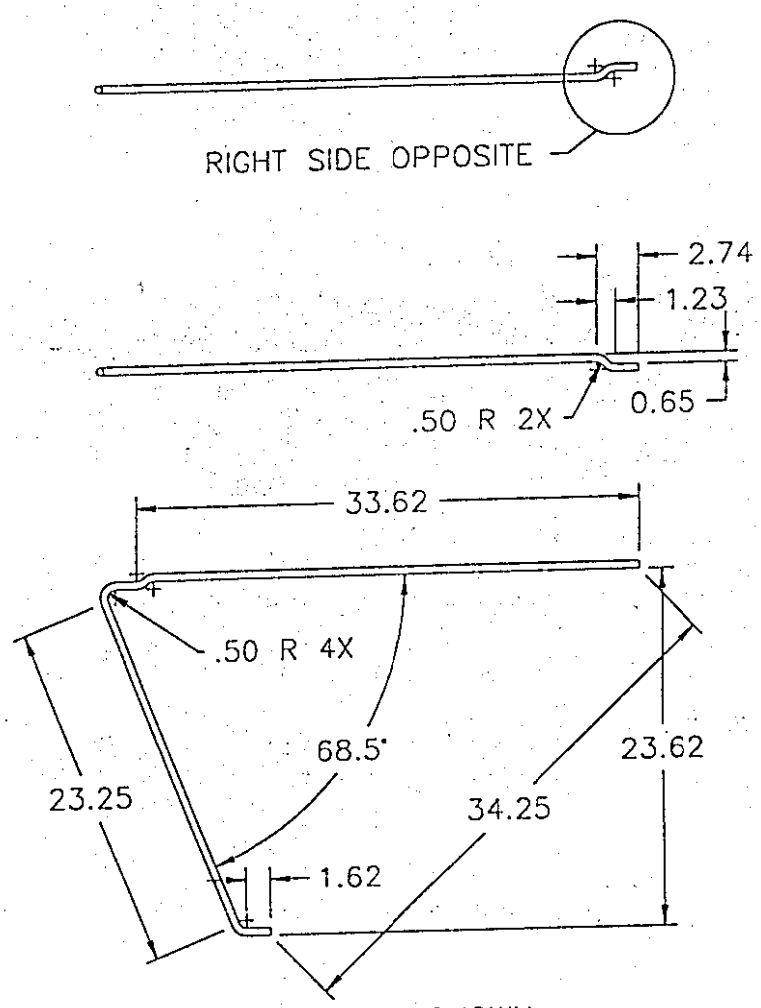

PART NO. 04A045114

PMIC		DO NOT SCALE DRAWING	CONTRACT NUMBER
MECHANICAL PROPERTIES		UNLESS OTHERWISE SPECIFIED: DIMENSIONS ARE IN INCHES. TOLERANCES ON DECIMAL 2 PL .08 3 PL .005 FRACTION ±	CONTRACTOR
YP / TS / EL2 / RA / BH / RH	45107 SH3 / TMWSS	THIRD ANGLE PROJECTION	DRAWN BY L.C.MCFARLAND / DATE 07-09-18 / CHECKER / ENGINEER
	NEXT ASSY / USED ON	MATL ENGR	DRAWING APPROVAL STEVE MARRIOTT
	APPLICATION		DESIGN APPROVAL BOB RIEDL

DEPARTMENT OF THE ARMY
U.S. ARMY ARMAMENT RESEARCH, DEVELOPMENT AND ENGINEERING CENTER
ROCK ISLAND, ILLINOIS 61299-7300

ROTATIONAL STOP

SIZE	CAGE CODE	
D	59678	04A045114

SCALE | UNIT WT. | SHEET

DISTRIBUTION STATEMENT A. APPROVED FOR PUBLIC RELEASE; DISTRIBUTION IS UNLIMITED.

CAD MAINTAINED. CHANGES SHALL BE INCORPORATED BY THE DESIGN ACTIVITY.

NOTES:

1. APPLICABLE STANDARDS/SPECIFICATIONS
   A MIL-STD-100
   B ANSI Y14.5M-1982
2. MATERIAL: 3/16" NOMINAL DIA POP RIVETS

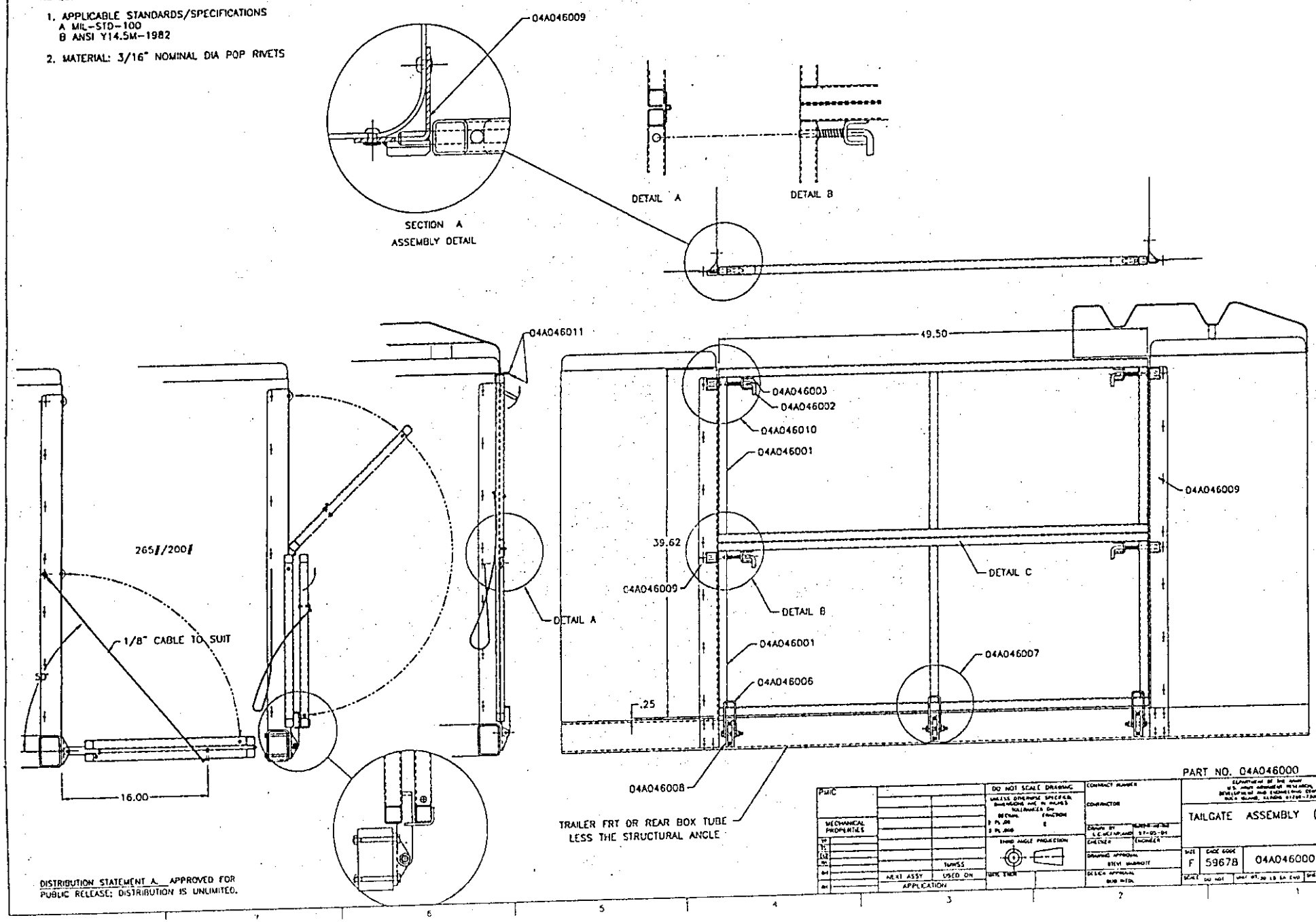

PART NO. 04A046000

TAILGATE ASSEMBLY (REAR)

SIZE	CAGE CODE	
F	59678	04A046000

SHEET 1 OF 2

DISTRIBUTION STATEMENT A. APPROVED FOR PUBLIC RELEASE; DISTRIBUTION IS UNLIMITED.

NOTES:

1. APPLICABLE STANDARDS/SPECIFICATIONS
   A MIL-STD-100
   B ANSI Y14.5M-1982
2. MATERIAL: 3/16" NOMINAL DIA POP RIVETS

CAD MAINTAINED. CHANGES SHALL BE INCORPORATED BY THE DESIGN ACTIVITY.

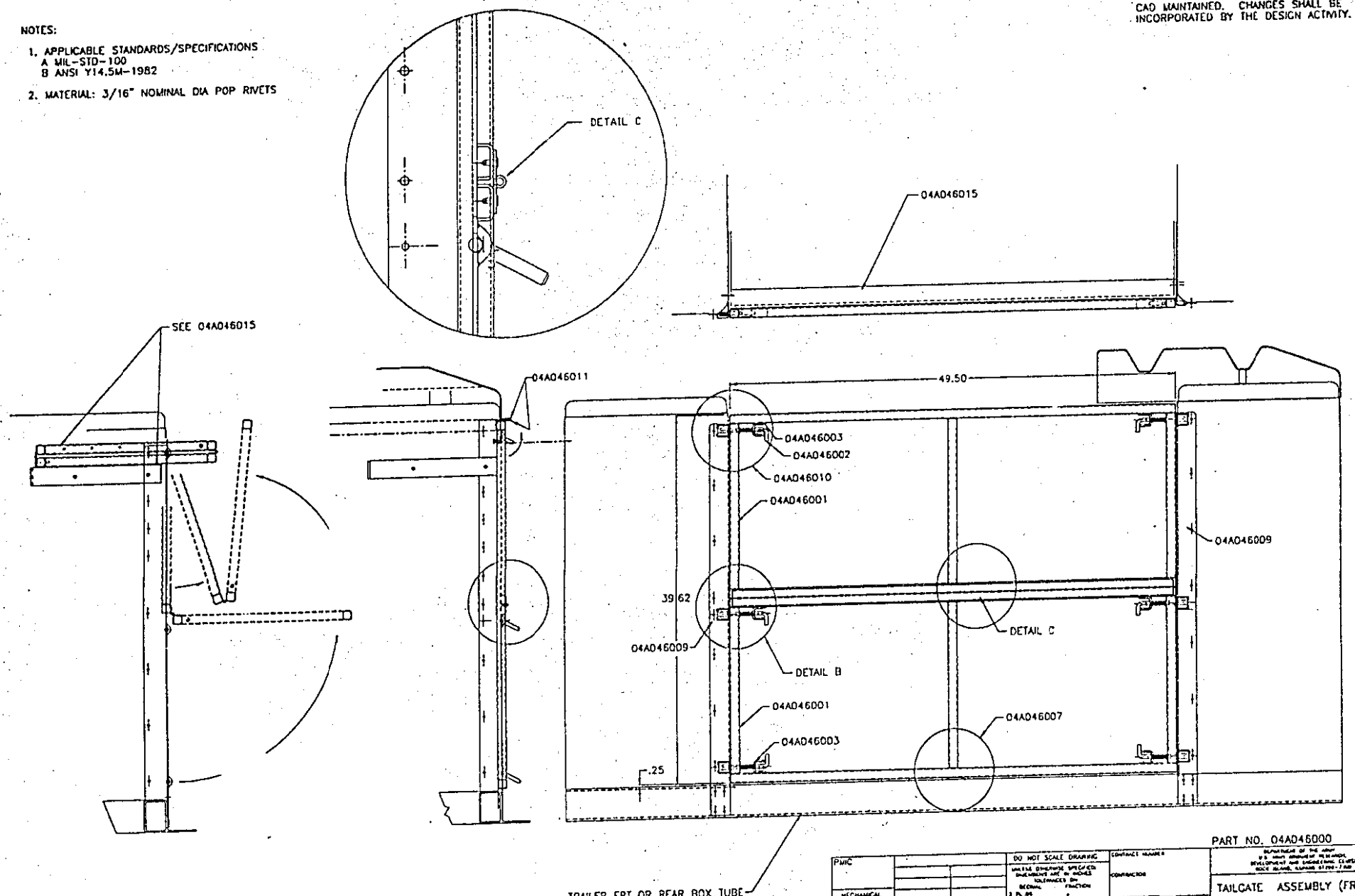

PART NO. 04A046000

TAILGATE ASSEMBLY (FRONT)

SIZE	CAGE CODE	
F	59678	04A046000

SHEET 2 OF 2

DISTRIBUTION STATEMENT A. APPROVED FOR PUBLIC RELEASE; DISTRIBUTION IS UNLIMITED.

NOTES:

1. APPLICABLE STANDARDS/SPECIFICATIONS
   A MIL-STD-100
   B ANSI Y14.5M-1982
   C ANSI/AWS A2.4 AND A3.0 (WELDING)
2. MATERIAL: ALUMINUM SQUARE TUBING, 1" X 1" X .125 WALL X 120" LG. (6) PCS, 6061-T6 ALUMINUM
3. FINISH: NONE

CAD MAINTAINED. CHANGES SHALL BE INCORPORATED BY THE DESIGN ACTIVITY.

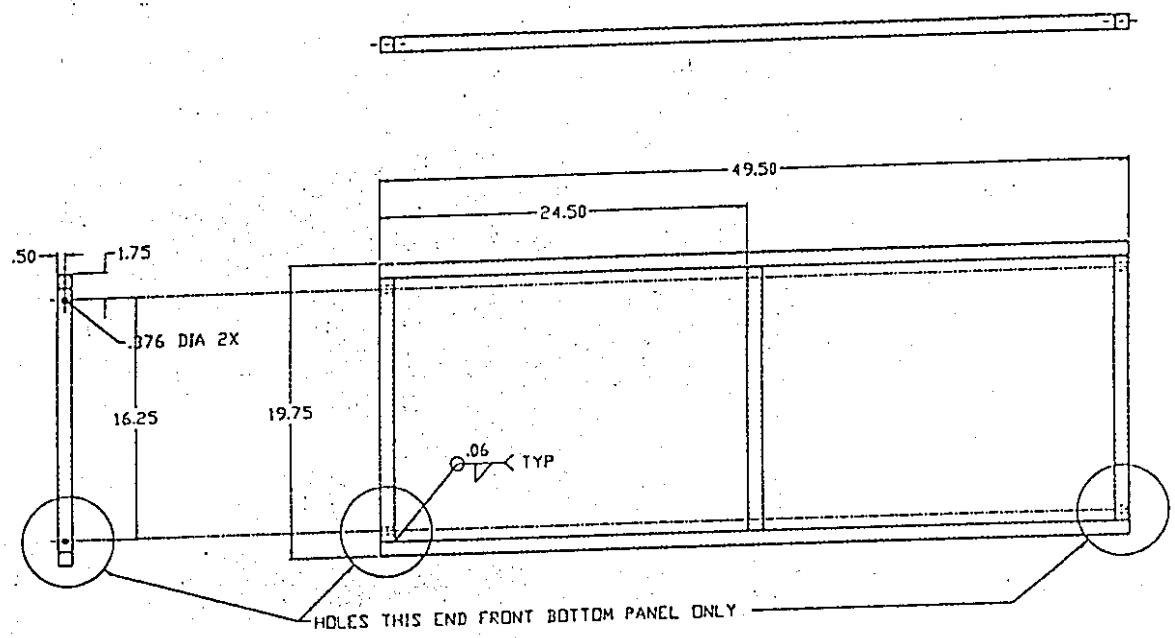

PART NO. 04A046001

PMIC	DO NOT SCALE DRAWING	CONTRACT NUMBER	DEPARTMENT OF THE ARMY U.S. ARMY ARMAMENT RESEARCH, DEVELOPMENT AND ENGINEERING CENTER
MECHANICAL PROPERTIES	UNLESS OTHERWISE SPECIFIED DIMENSIONS ARE IN INCHES TOLERANCES ON DECIMAL 3 PL .04 3 PL .005 FRACTION ±	CONTRACTOR	FRAME, GATE WELDMENT 4 REQ'D
	THIRD ANGLE PROJECTION	DRAWN BY L.C. MCFARLAND / CHECKER / ENGINEER	SIZE D / CAGE CODE 59678 / 04A046001
04A046000 / NEXT ASSY	1MWSS / USED ON	DRAWING APPROVAL STEVE MARRIOTT	SCALE DO NOT / UNIT WT. / SHEET
APPLICATION	MATL ENGR	DESIGN APPROVAL BOB RIEDL	

DISTRIBUTION STATEMENT A. APPROVED FOR PUBLIC RELEASE; DISTRIBUTION IS UNLIMITED.

REVISIONS				
ZONE	LTR	DESCRIPTION	DATE (YR-MO-DA)	APPROVED

CAD MAINTAINED. CHANGES SHALL BE INCORPORATED BY THE DESIGN ACTIVITY.

NOTES:

1. APPLICABLE STANDARDS/SPECIFICATIONS
   A MIL-STD-100
   B ANSI Y14.5M-1982

2. MATERIAL: DETAIL 1: BOLT STOCK, .37 DIA X 6.50 LG. (10) PCS
   DETAIL 2: MUSIC WIRE SPRING, .041 WIRE DIA X .380 I.D. X 1.50 FREE LENGTH, COMPRESS TO .50 (10 REQ'D)
   DETAIL 3: SPLIT PIN, .125 DIA X .75 LG. (10 REQ'D)

3. FINISH: NONE

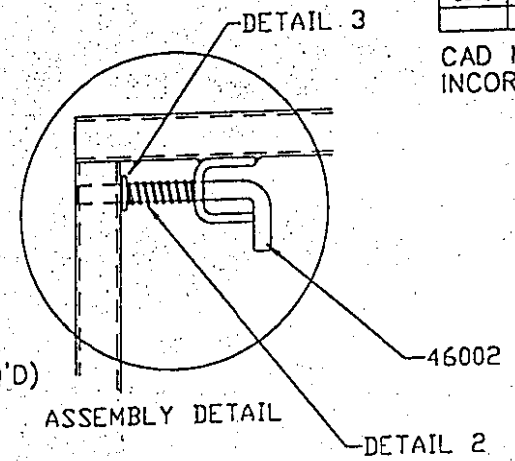

ASSEMBLY DETAIL

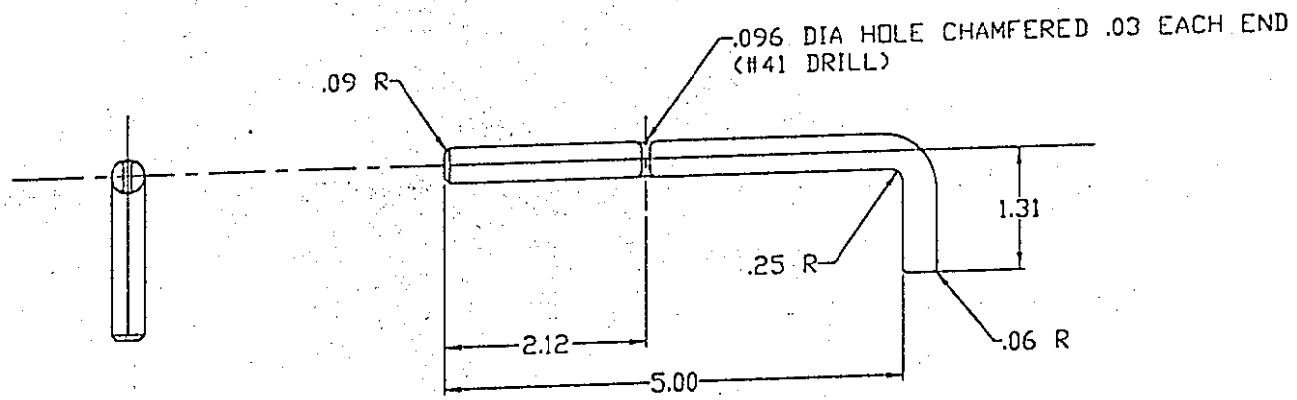

DETAIL 1

PART NO. 04A046002

PMIC			DO NOT SCALE DRAWING	CONTRACT NUMBER
MECHANICAL PROPERTIES			UNLESS OTHERWISE SPECIFIED: DIMENSIONS ARE IN INCHES TOLERANCES ON DECIMAL 2 PL ±.06 3 PL ±.005 FRACTION ±	CONTRACTOR
YP			THIRD ANGLE PROJECTION	DRAWN BY L.C. MCFARLAND — DATE (YR-MO-DA) 97-05-04
TS				CHECKER — ENGINEER
EL2				DRAWING APPROVAL STEVE MARRIOTT
RA	04A046000	TMWSS		
BH	NEXT ASSY	USED ON	MATL ENGR	DESIGN APPROVAL BOB RIEDL
RH	APPLICATION			

DEPARTMENT OF THE ARMY
U.S. ARMY ARMAMENT RESEARCH, DEVELOPMENT AND ENGINEERING CENTER
ROCK ISLAND, ILLINOIS 61299-7300

LATCH BAR, TAILGATE
10 REQ'D

SIZE	CAGE CODE	
C	59678	04A046002
SCALE DO NOT	UNIT WT.	SHEET

DISTRIBUTION STATEMENT A.
APPROVED FOR PUBLIC RELEASE;
DISTRIBUTION IS UNLIMITED.

REVISIONS				
ZONE	LTR	DESCRIPTION	DATE (YR-MO-DA)	APPROVED

CAD MAINTAINED. CHANGES SHALL BE INCORPORATED BY THE DESIGN ACTIVITY.

NOTES:

1. APPLICABLE STANDARDS/SPECIFICATIONS
   A MIL-STD-100
   B ANSI Y14.5M-1982
   C ANSI/AWS A2.4 AND A3.0 (WELDING)

2. MATERIAL: BAR STOCK, ALUMINUM, 6061-T6
   .186 X 1 X 6" LG. (10) PCS

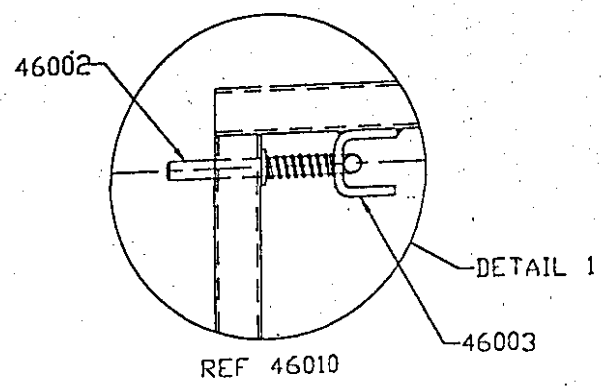

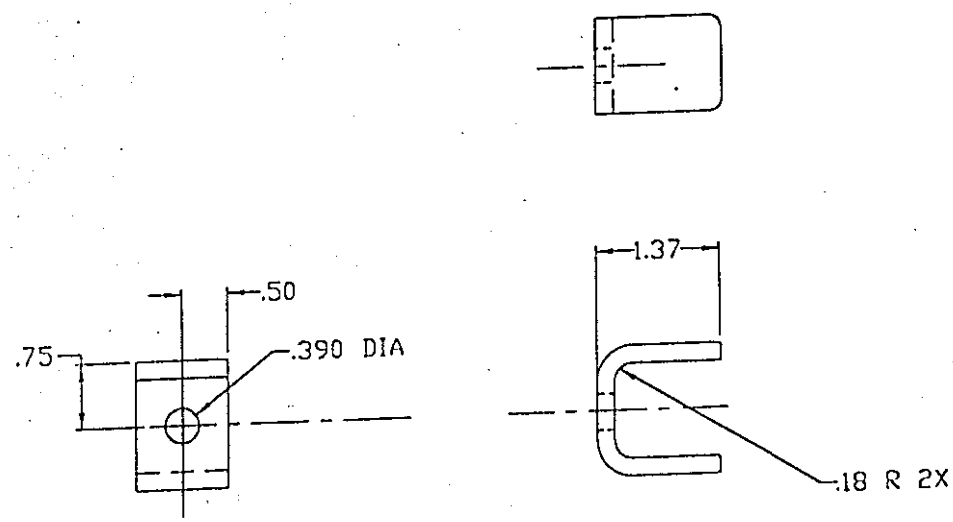

DETAIL 1
(10 REQ'D)

PART NO. 04A046003

PMIC		DO NOT SCALE DRAWING	CONTRACT NUMBER
MECHANICAL PROPERTIES		UNLESS OTHERWISE SPECIFIED: DIMENSIONS ARE IN INCHES TOLERANCES ON DECIMAL 2 PL ±.06 3 PL ±.005 FRACTION ±	CONTRACTOR
YP		THIRD ANGLE PROJECTION	DRAWN BY L.C. MCFARLAND — DATE (YR-MO-DA) 97-05-08
TS			CHECKER — ENGINEER
EL2			DRAWING APPROVAL STEVE MARRIOTT
RA	04A046000	TMWSS	
BH	NEXT ASSY	USED ON	MATL ENGR. — DESIGN APPROVAL BOB RIEDL
RH	APPLICATION		

DEPARTMENT OF THE ARMY
U.S. ARMY ARMAMENT RESEARCH, DEVELOPMENT AND ENGINEERING CENTER
ROCK ISLAND, ILLINOIS 61299-7300

LATCH PLATE, TAILGATE

SIZE	CAGE CODE	
C	59678	04A046003
SCALE DO NOT	UNIT WT.	SHEET

DISTRIBUTION STATEMENT A.
APPROVED FOR PUBLIC RELEASE;
DISTRIBUTION IS UNLIMITED.

REVISIONS				
ZONE	LTR	DESCRIPTION	DATE (YR-MO-DA)	APPROVED

CAD MAINTAINED. CHANGES SHALL BE INCORPORATED BY THE DESIGN ACTIVITY.

NOTES:

1. APPLICABLE STANDARDS/SPECIFICATIONS
   A MIL-STD-100
   B ANSI Y14.5M-1982
2. MATERIAL: ALUMINUM HINGE, 6061-T6, .040 X 48.5 LG (2) PCS
3. BREAK ALL EDGES .015 + .015
4. FINISH: NONE

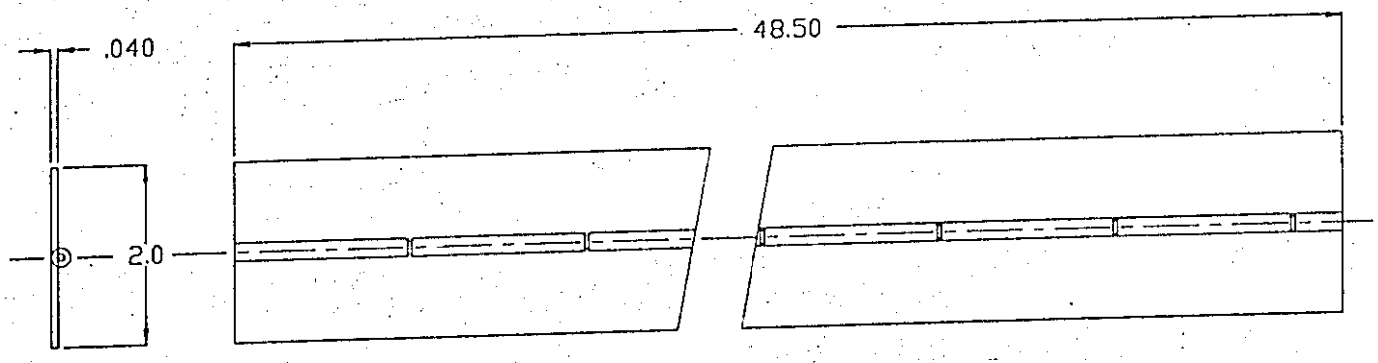

PART NO. 04A046004

PMIC		DO NOT SCALE DRAWING	CONTRACT NUMBER
		UNLESS OTHERWISE SPECIFIED: DIMENSIONS ARE IN INCHES TOLERANCES ON DECIMAL 2 PL ±.06 3 PL ±.005 FRACTION ±	CONTRACTOR
MECHANICAL PROPERTIES		THIRD ANGLE PROJECTION	DRAWN BY L.C. MCFARLAND; DATE (YR-MO-DA) 96-17-12
YP			CHECKER; ENGINEER
TS			DRAWING APPROVAL STEVE MARRIOTT
EL2			
RA	04A046000	TMWSS	
BH	NEXT ASSY	USED ON	MATL ENGR
RH	APPLICATION		DESIGN APPROVAL BOB RIEDL

DEPARTMENT OF THE ARMY
U.S. ARMY ARMAMENT RESEARCH, DEVELOPMENT AND ENGINEERING CENTER
ROCK ISLAND, ILLINOIS 61299-7300

HINGE, MID TAILGATE
2 PCS REQ'D

SIZE	CAGE CODE	
C	59678	04A046004
SCALE DO NOT	UNIT WT.	SHEET

DISTRIBUTION STATEMENT A.
APPROVED FOR PUBLIC RELEASE;
DISTRIBUTION IS UNLIMITED.