LIST OF COMPONENTS, FOR THE TRAILER MOUNTED WELD SHOP SET

ITEM	NAME	SPEC/DESC	QTY	PART NO.	CAGE	V.I.D.	LOC
1.	APRON, WELDER'S	A-A-55098	2 EA	5T353	25795	48302	
2.	AWL, SCRATCH	3-1/2" BLADE W/H'DL	1 EA	5C595	25795	48118	
3.	BLADE, HAND HACKSAW	ANSI/ASME B94.52M, 10 INCH, COMPOSITE BLADE, STANDARD TOOTH FORM, RAKER TOOTH SET, 18 TEETH/INCH	10 BD	2476A21	39428	48805	
4.	BLADE, HAND HACKSAW	ANSI/ASME B94.52M, 10 INCH, COMPOSITE BLADE, STANDARD TOOTH FORM, RAKER TOOTH SET, 24 TEETH/INCH	10 BD	2476A22	39428	48805	
5.	BLADE, HAND HACKSAW	ANSI/ASME B94,52M, 10 INCH, COMPOSITE BLADE, STANDARD TOOTH FORM, RAKER TOOTH SET, 32 TEETH/INCH	10 BD	2476A23	39428	48805	
6.	BLADE, SAW RECIP	CID A-A-3089, STYLE B, SIZE 2, 14 TEETH/INCH	1 PKG –5			48808	
7.	BLADE, SAW RECIP	CID A-A-3089, STYLE B, SIZE 2, 18 TEETH/INCH	1 PKG –5			48808	
8.	BLADE, SAW RECIP	CID A-A-3089, STYLE B, SIZE 2, 24 TEETH/INCH	1 PKG –5			48808	
9.	BRUSH, WIRE	CID A-A-2511, ROTARY CUP, CRIMPED WIRE, 5 INCH O.D	1 EA	4872A14	39428	48807	
10.	BRUSH, WIRE, SCRATCH	CID A-A-2078	1 EA	7954A14	39428	48102	
11.	CABLE ASSEMBLY	ELECTRICAL POWER, UL 817 OUTDOOR USE CORD, GROUNDING TYPE STOW-A, 50 FT. LG. 12 GA.	1 EA				
12.	CABLE CONNECTORS	300 AMP, CAM CONNECTOR	2 EA	9405-1800	2N560	48316	
			4 EA	9510-1111	2N560	48316	
13.	CABLE, WELDING EXT.	#1 FLEXIBLE, INSULATED COPPER RATED FOR 250 AMP @ 100 FT, 10 FT LG.	2 EA				
14.	CABLE, WELDING EXT.	#1 FLEXIBLE, INSULATED COPPER RATED FOR 250 AMP @ 100 FT, 50 FT LG.	2 EA				
15.	CHISEL, COLD HAND	½ IN WIDE CUT, 5-3/4 INCH LG SHARP W/BEVELED STRIKE END	2 EA	3575A22	39428	48111	
16.	CLAMP, C	CID A-A-429, LIGHT SERVICE, REGULAR THROAT, 4 INCH SIZE	2 EA	5165A23	39428	48114	
17.	CLAMP, C	CID A-A-429, MEDIUM SERVICE, REGULAR THROAT, 4 INCH SIZE	2 EA	5165A24	39428	48114	
18.	CLAMP, GROUNDING					11021593	
19.	CLAMP, PLIER	LOCKING WELDING CLAMP, 9 INCH OVERALL LENGTH, JAW WIDTH 3/4 INCHES, THROAT DEPTH 3 INCHES, CLAMPING CAPACITY 0-1-5/8 INCHES	2 EA	3A513	25795	48103	
20.	CLEANING SET, TIPS	CID A-A-51153, SIZE 1, WELD AND CUTTING ORIFICE TOOLS	1 SE			48045	

(Attach 1/9)

LIST OF COMPONENTS, FOR THE TRAILER MOUNTED WELD SHOP SET

ITEM	NAME	SPEC/DESC	QTY	PART NO.	CAGE	V.I.D.	LOC
21.	CLEANING SET, TIPS	CID A-A-51153, SIZE 2, WELD AND CUTTING ORIFICE TOOLS	1 SE			48045	
22.	COMPRESSOR, AIR		1 EA			11B257019	
23.	CRAYON, MARKING	CID A-A-2359	1 GR		2N560	48403	
24.	CURTAIN, WELDING		4 EA		2N560	48311	
25.	CYLINDER, ARGON	COMPRESSED GAS CONTAINER PER FED STD RR-C-901/1	1 EA		2N560	49403	
26.	CYLINDER, OXYGEN	COMPRESSED GAS CONTAINER PER FED STD RR-C-901/1	1 EA		2N560	49401	
27.	CYLINDER, PROPYLENE	COMPRESSED GAS CONTAINER	1 EA		2N560	11B257012	
28.	DISK, ABRASIVE	PLAIN, 9 INCH, ALUMINUM OXIDE, 24 GRIT, 5/8 INCH ARBOR HOLE, OPEN COAT, VULCANIZED FIBER BACK,	1 PKG-12		2N560		
29.	DISK, ABRASIVE	PLAIN, 9 INCH, ALUMINUM OXIDE, 36 GRIT, 5/8 INCH ARBOR HOLE, OPEN COAT, VULCANIZED FIBER BACK,	1 PKG-12		2N560		
30.	DRILL SET, TWIST	STRAIGHT SHANK, HIGH SPEED STEEL, JOBBERS SHORT LENGTH, FRACTIONAL SIZES, 1/16-1/2 INCH INCLUSIVE, INCREMENTED BY 1/16THS, WITH CASE	1 SE	2476A21, 2 & 3	39428	48804	
31.	DRILL, ELECTRIC	½ INCH CAPACITY, REVERSABLE		3134A21	39428	48203	
32.	DUPLEX HOSE ASS'Y.	T-TYPE OXYGEN-PROPYLENE HOSE, 5/16 INCH ID, 50 FT LG. AIRCO TWIN	1 EA	908-4110	4G314	48509	
33.	EAR PLUGS	HEARING PROTECTION	1 GR	4T147	25795	48308	
34.	ELECTRODE, CARBON	1/8 X 12 INCH ROUND, COPPER CLAD, DC FOR AIR ARC GOUGING	2 EA		2N560		
35.	ELECTRODE, CARBON	5/32 X 12 INCH ROUND, COPPER CLAD, DC FOR AIR ARC GOUGING	2 EA		2N560		
36.	ELECTRODE, CARBON	1/4 X 12 INCH ROUND, COPPER CLAD, DC FOR AIR ARC GOUGING	2 EA		2N560		
37.	ELECTRODE, TUNGSTEN	AWS A5.12, 0.060 X 7.0 INCHES LG.	3 PC		2N560	48401	
38.	ELECTRODE, TUNGSTEN	AWS A5.12, 0.062 X 7.0 INCHES LG.	3 PC		2N560	48401	
39.	ELECTRODE, TUNGSTEN	AWS A5.12, 0.094 X 7.0 INCHES LG.	3 PC		2N560	48401	

LIST OF COMPONENTS, FOR THE TRAILER MOUNTED WELD SHOP SET

ITEM	NAME	SPEC/DESC	QTY	PART NO.	CAGE	V.I.D.	LOC
40.	ELECTRODE, TUNGSTEN	AWS A5.12, 0.125 X 7.0 INCHES LG.	3 PC		2N560	48401	
41.	ELECTRODE, WIRE	AWS A5.10 ER5356, .030 INCH DIAMETER ALUMINUM WELDING, 16 LB SPOOL	1 SL		2N560		
42.	ELECTRODE, WIRE	AWS A5.10 ER5356, .045 INCH DIAMETER STEEL WELDING, 10 LB SPOOL	1 SL		2N560		
43.	ELECTRODE, WIRE	MIL-E-24403/1C, TYPE MIL-81T1-NIL, FLUX CORED 1/16 INCH DIAMETER, 25 LB SPOOL	1 SL		2N560		
44.	ELECTRODE WELDING	AWS A5.1 E6010, 0.156 X 14 INCHES LG.	30 LB		2N560		
45.	EXTINGUISHER, FIRE	CID A-A-3983, TYPE 1, CLASS 1, SIZE 5 W/VEHICLE MOUNTING BRACKET	1 EA		39428	48312	
46.	FACE SHIELD	CID A-A-1770	1 EA	4T539	25795	48304	
47.	FILE SET, HAND	WELDER'S SET, 1-10INCH BOX SMOOTH CUT FLAT FILE, 1-12 INCH HALF-ROUND BASTARD FILE, AND 1-14 INCH HALF-ROUND PIPELINER FILE.	1 EA 1 EA 1 EA	4219A34 4221A14 4221A16	39428	48117	
48.	FIRST AID KIT		1 EA			48307	
49.	FLINT TIP, LIGHTER	CID A-A-3033, IGNITER	1 PG		2N560	48404	
50.	FLUX, BRAZING PASTE	AWS A5.8, CLASS FB3-A FOR STEEL, COPPER AND NICKLE, 1 LB CAN	1 LB		2N560	48406	
51.	FLUX, BRAZE POWDER	AWS A5.8, CLASS FB1-A FOR ALUMINUM 1 LB CAN	1 LB	SP400-1	2N560	48407	
52.	HAND HACKSAW	CID A-A-453, FLAT FRAME CLASS WITH OPEN GRIP HANDLE, ACCEPTS 10-12 INCH BLADES	1 EA	4077A1	39428	48113	
53.	GLOVES, WELDER'S	CID A-A-50022, LARGE	1 PR	747F40	2N560	48303	
54.	GLOVES, WELDER'S	CID A-A-50022, MEDIUM	1 PR	747F40	2N560	48303	
55.	GOGGLES, INDUSTRIAL	CID A-A-1110, WITH DIRECT VENTILATION AND POLYCARBONATE ANTI-FOG LENS	1 PR	505T14	39428	48301	
56.	GOGGLES, WELDER'S	CID A-A-1814, CLASS B, TYPE II	2 PR		2N560		

LIST OF COMPONENTS, FOR THE TRAILER MOUNTED WELD SHOP SET

ITEM NAME	SPEC/DESC	QTY	PART NO.	CAGE	V.I.D.	LOC
57. GUN, AIR BLOW	SELF-RELIEVING SAFETY-TYPE W/AIR SCREEN COMPLIANT WITH OSHA ON PRESSURE RELIEF NOISE REGULATION WITH CONTINUOUS USE, FEMALE ¼-18 NPT THREAD.	1 EA	544005K35	39428	48806	
58. HAMMER SCALING	PNEUMATIC IMPACT	1 EA	6022A13	39428	48204	
59. HAMMER, HAND	CID A-A-1292, 2 LB HEAD	1 EA	5881A2	39428	48101	
60. HAMMER-BRUSH	WELDER'S, STRAIGHT CHIPPING, WITH 2-EXTRA BRUSHES	1 EA	7954A11	39428	48102	
61. HANDLE, FILE	ADJUSTABLE CHUCK OR JAW TYPE TO FIT WELDERS FILE SET	1 EA		39428	48120	
62. HELMET, WELDER'S	CID A-A-1994	1 EA	5423T61	39428	48306	
63. HOLDER, ELECTRODE	CID A-A-51161, SIZE 400	1 EA	LENCO AF-2	2N560	48315	
64. HOSE, AIR	5/16 ID, 50 FT LG	1 EA		2N560		
65. HOSE ASS'Y.	OXYGEN, JEOPRENE REINF	1.EA	54765K92	39428	49200	
66. HOSE ASS'Y.	ARGON	1 EA		2N560	11B257006	
67. IGNITER, FRICTION	CID A-A-3033, ROUND FILE	1 EA		2N560	48506	
68. LENS, GOGGLES	CID A-A-1813, TYPE II	1 EA		2N560	48301	
69. LENS, GOGGLES	CID A-A-1813, TYPE IV	1 EA		2N560		
70. LENS, WELDING	# 11 SHADE	1 EA	51885T85	39428	48305	
71. LEVEL, TORPEDO	MAGNETIC, 9 INCH, ALUMINUM BODY WITH V-GROOVE, 3-VIAL BUBBLES, INCLUDING 1-LEVEL, 1-45 DEGREE AND 1- PLUMB FOR READING	1 EA	2151A45	39428	48116	
72. LIGHT EXTENSION	CID A-A-60006, TYPE II, CLASS 2, 25 FOOT LENGTH	1 EA		39428		
73. MITTENS, HEAT	PROTECT 400 DEGREES F	1 PR		2N560		
74. OILER, HAND PUMP	CID A-A-50477, CLASS B, ¼ PINT CAPACITY	1 EA	1245K15	39428	48100	
75. PAIL, UTILITY	CID A-A-1273, TYPE 1, 10 QUART CAPACITY	1 EA		39428		
76. PLIERS, DIAGONAL	CID A-A-2330, TYPE I CLASS1, STYLE A, 7-1/2 INCH NOMINAL SIZE	1 EA	3719A2	39428	48107	
77. PLIERS, SLIP JOINT	8 INCH, STRAIGHT NOSE, COMBINATION JAW, WITH CUTTER	1 EA	5624A9	39428	48104	
78. PRYBAR	¾ INCH HEX STOCK, 18" LG.	1 EA	3R548	2N560	48112	
79. PUNCH, CENTER, SOLID	½ INCH BODY DIAMETER, 4 INCHES OAL MIN	1 EA	3415A39	39428	48111	

LIST OF COMPONENTS, FOR THE TRAILER MOUNTED WELD SHOP SET

ITEM	NAME	SPEC/DESC	QTY	PART NO.	CAGE	V.I.D.	LOC
80.	RESPIRATOR, AIR	CID A-A-1633	20 BX	9920	2N560	48309	
81.	ROD, BRAZING	AWS A5.7 RBUCZN-6, COPPER, 0.187 X 36 INCH	1 BD –5 LB		2N560		
82.	ROD, GROUND	CID A-A-55804, TYPE III, CLASS B	1 BD		2N560		
83.	ROD, WELDING	AWS A5.9 ER347, 0.062 X 36 INCHES LG FOR ALUMINUM	1 BD –5 LB		2N560		
84.	ROD WELDING	AWS A5.9 ER347, 0.062 X 36 INCHES LG FOR STEEL	1 BD –5 LB		2N560		
85.	SANDER-GRINDER	VERTICAL		4395A13	39428	48202	
86.	SAW, RICIPROCATING	ELECTRIC		39875A21	39428	48201	
87.	SLEEVES, WELDERS	CID A-A-55098, TYPE 2, CLASS I	1 PR	935	2N560	48310	
88.	SOLDER, 60/40	AWS SM CH-23, 1 LB SPOOL	1 SP	SP400-1	2N560	48408	
89.	SQUARE, CARPENTER	STEEL, 16" X 24"	1 EA	6C226	2N560	48110	
90.	SQUARE, COMB	STEEL, 12 INCH	1 EA	6C229	2N560	48119	
91.	TAPE, MEASURE	RETRACTIBLE, 12 FOOT LENGTH, STEEL BLADE, ¾ INCH WIDE W/RESISTANT COATING	1 EA	6802A16	39428	48109	
92.	TEMP, CRAYON	200 DEGREE INDICATING COMPOUND	1 BX-12		2N560	48402	
93.	TEMP, CRAYON	400 DEGREE INDICATING COMPOUND	1 BX-12		2N560	48402	
94.	TIG MODULE	200 AMP CAPACITY	1 EA	K930-1	2N560	48707	
95.	TORCH, AIR ARC	GOUGING PROCESS	1 EA	K2000	2N560	48705	
96.	TORCH OUTFIT	TIG WELD PROCESS	1 EA	K861-7	2N560	48704	
97.	TORCH OUTFIT	MIG WELD PROCESS	1 EA	K471-1 W.J466-1	2N560	48702	
98.	TORCH SET	OXY-PROPYLENE PROCESS	1 EA		2N560	48510	
99.	VALVE, REGULATOR	ARGON, PRESSURE/FLOWMETER	1 EA	REF-3PGD	2N-560	48512	
100.	VALVE, REGULATOR	AIR	1 EA			11B257009	
101.	VALVE, REGULATOR	OXYGEN, PRESSURE/FLOWMETER	1 EA		2N560	48511	
102.	VALVE, REGULATOR	PROPYLENE, PRESSURE/FLOWMETER	1 EA		2N560	48508	
103.	VISE, MACHINIST'S	4-1/2 INCH JAW, W/SWIVEL BASE, ANVIL BACK PLATE, BOLT MOUNT PATTERN	1 EA	5310A23	39428	48115	

LIST OF COMPONENTS, FOR THE TRAILER MOUNTED WELD SHOP SET

ITEM	NAME	SPEC/DESC	QTY	PART NO.	CAGE	V.I.D.	LOC
104.	WELDING MACHINE	AC/DC, DIESEL, 250 AMP, 100% DUTY CYCLE	1 EA		2N560	43000	
105.	WIRE FEEDER	250 AMP, 50-350 IPM FEED WORKS WITH MIG-TIG TORCH	1 EA	LN-25	2N560	48701	
106.	WRENCH,	CID A-A-2344, 8 INCH NOMINAL, ADJUSTABLE	1 EA	5385A14	39428	48106	

NOTES:

1. APPLICABLE STANDARDS/SPECIFICATIONS
   A MIL-STD-100
   B NEMA STANDARD CONNECTIONS
2. COMMERCIAL ITEM DESCRIPTION, ELECTRICAL SCHEMATIC; SWITCH SELECTIVE TOOL AND LIGHTS POWER FROM PLUG-IN A.C. OR WELDER/GENERATOR FOR THE TRAILER MOUNTED WELD SHOP SET.
3. THE WIRING SCHEMATIC IS REQUIRED TO PROVIDE A MINIMUM AND CONSISTANT INTERFACE FOR TRAINING, SAFETY AND COMPONENT INTERCHANGABILITY.
4. THE SUPPLIER SHALL OBTAIN APPROVAL FROM THE ENGINEERING PROPONENT IN WRITING BEFORE PERFORMANCE OR INTERFACE CHANGES ARE MADE.

CAD MAINTAINED. CHANGES SHALL BE INCORPORATED BY THE DESIGN ACTIVITY.

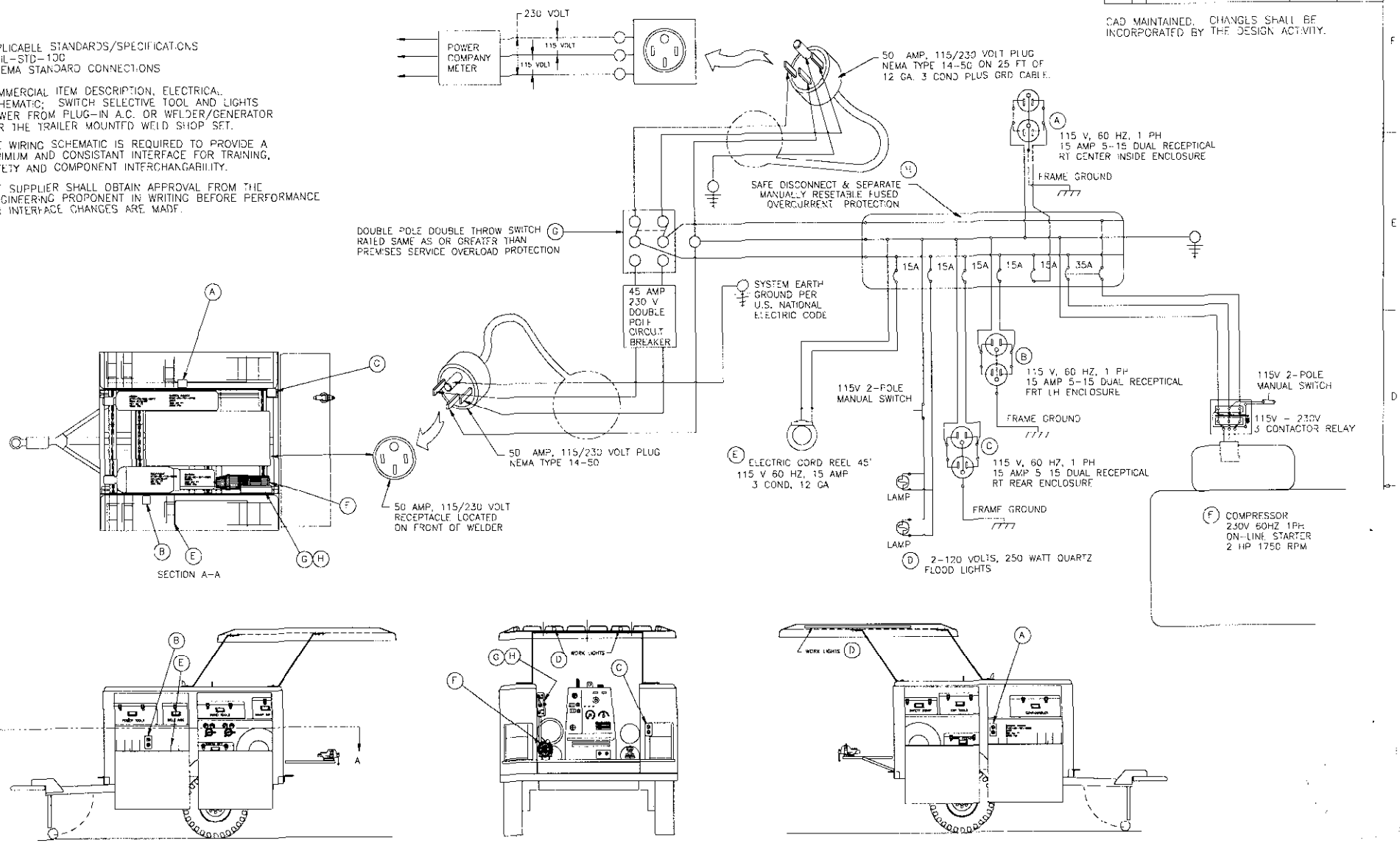

PART NO. 04A047000

PMIC	DO NOT SCALE DRAWING	CONTRACT NUMBER	DEPARTMENT OF THE ARMY U.S. ARMY ARMAMENT RESEARCH, DEVELOPMENT AND ENGINEERING CENTER ROCK ISLAND, ILLINOIS 61299-7300
MECHANICAL PROPERTIES	UNLESS OTHERWISE SPECIFIED DIMENSIONS ARE IN INCHES TOLERANCES ON DECIMAL 2 PL 08 3 PL 005 FRACTION E	CONTRACTOR	WIRING PLAN FOR THE TRAILER MOUNTED WELD SHOP SET
YP TS EL2 RA BH RH	THIRD ANGLE PROJECTION	DRAWN BY L.C.MCFARLAND DATE(YR-MO-DA) 96-07-25 CHECKER ENGINEER	SIZE F CAGE CODE 59678 04A047000
TMWSS		DRAWING APPROVAL STEVE MARRIOTT	SCALE UNIT WT. SHEET
NEXT ASSY USED ON	MATL ENGR	DESIGN APPROVAL BOB RIEDL	
APPLICATION			

DISTRIBUTION STATEMENT A. APPROVED FOR PUBLIC RELEASE; DISTRIBUTION IS UNLIMITED.

Attach 020

NOTES:

1. APPLICABLE STANDARDS/SPECIFICATIONS
   A MIL-STD-100
   B ANSI Y14.5M-1982
   C ANSI/AWS A2.4 AND A3.0 (WELDING)
2. MATERIAL: ALUMINUM PLATE, 2 PIECES, .125 THICK X 7.50 WIDE X 85.50 LONG.
2. PROCESS: LOCATE, MARK OFF AND DRILL .203 DIA HOLES AND MATCH DRILL TO DECK. ATTACH WITH 3/16" ALUMINUM POP RIVETS W/ 1/2" GRIP LENGTH. OMIT RIVETS WHERE RIVETING CANNOT GRIP.

REVISIONS				
ZONE	LTR	DESCRIPTION	DATE (YR-MO-DA)	APPROVED

CAD MAINTAINED. CHANGES SHALL BE INCORPORATED BY THE DESIGN ACTIVITY.

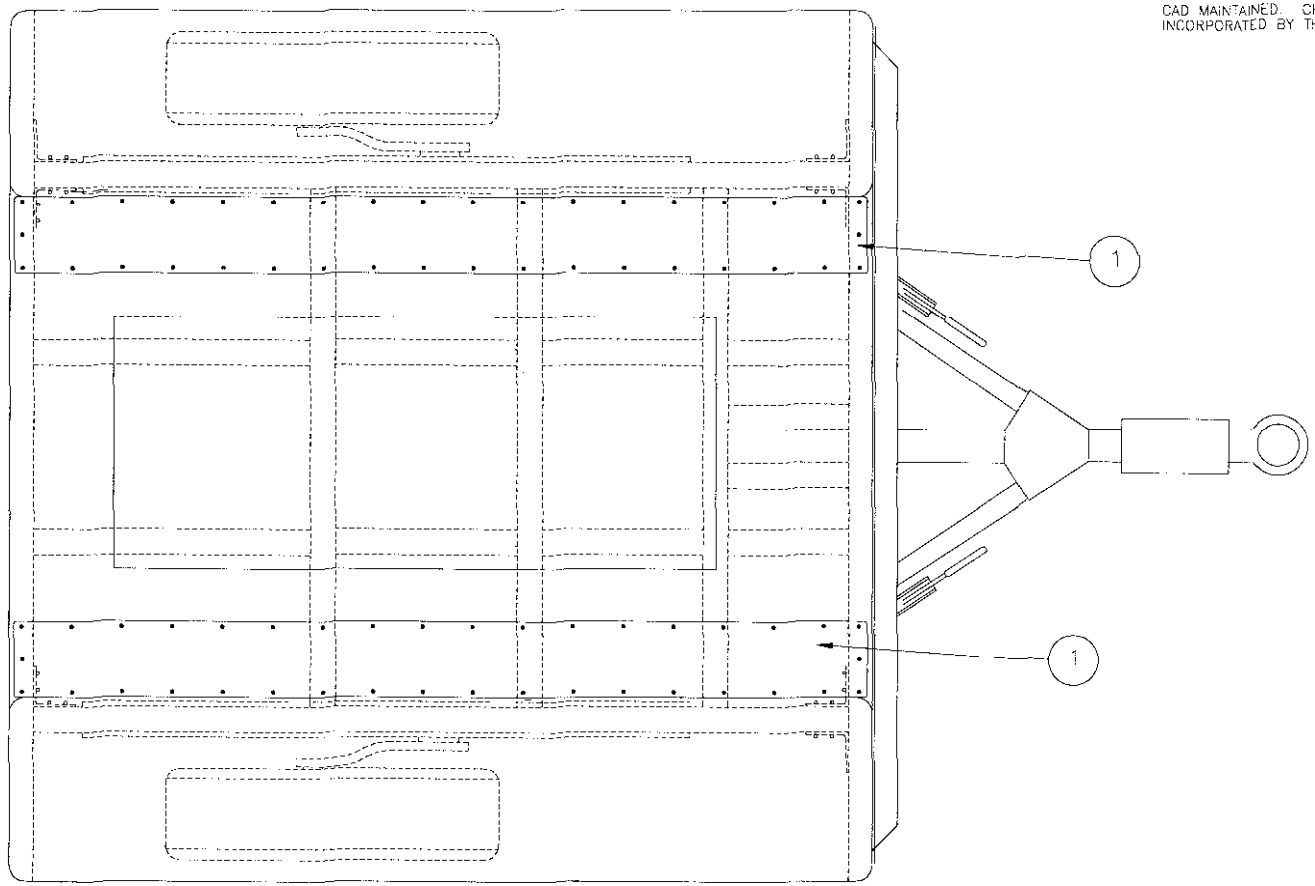

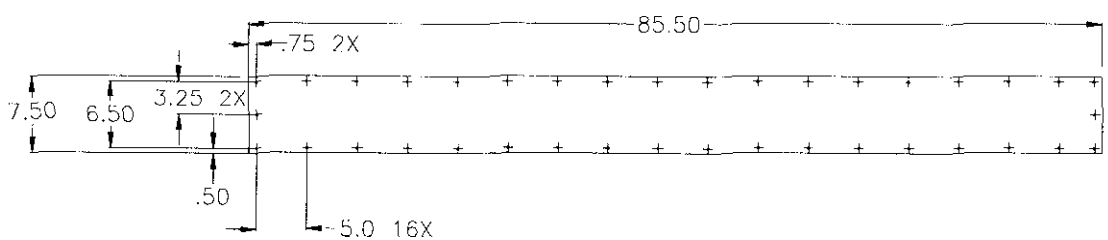

DETAIL 1

PART NO. 04A049610

PMIC	DO NOT SCALE DRAWING	CONTRACT NUMBER	DEPARTMENT OF THE ARMY U.S. ARMY ARMAMENT RESEARCH, DEVELOPMENT AND ENGINEERING CENTER ROCK ISLAND, ILLINOIS 61299-7300
MECHANICAL PROPERTIES	UNLESS OTHERWISE SPECIFIED: DIMENSIONS ARE IN INCHES TOLERANCES ON DECIMAL 2 PL .06 3 PL .005 FRACTION ±	CONTRACTOR	FLOOR SHEET FILLER PANEL ASSEMBLY
YP / TS / EL2 / RA / BH / RH	THIRD ANGLE PROJECTION	DRAWN BY L.C.MCFARLAND / DATE 97-07-25 / CHECKER / ENGINEER	SIZE F / CAGE CODE 59678 / 04A049610
	04A04004 / TMWSS	DRAWING APPROVAL BOB RIEDL	
	NEXT ASSY / USED ON	DESIGN APPROVAL STEVE MARRIOTT	SCALE / UNIT WT. / SHEET
	APPLICATION	MATL ENGR	

DISTRIBUTION STATEMENT A. APPROVED FOR PUBLIC RELEASE; DISTRIBUTION IS UNLIMITED.

REVISIONS				
ZONE	LTR	DESCRIPTION	DATE (YR-MO-DA)	APPROVED

CAD MAINTAINED. CHANGES SHALL BE INCORPORATED BY THE DESIGN ACTIVITY.

NOTES:

1. APPLICABLE STANDARDS/SPECIFICATIONS
   A MIL-STD-100
   B ANSI Y14.5M-1982
2. COMMERCIAL ITEM DESCRIPTION
3. THE LIGHT IS MOUNTED TO BE ROTATED TO THE VERTICAL TO BOUNCE LIGHT OFF THE UNDERSIDE OF THE CAP. A 300 WATT LIGHT IS CAPABLE OF ILLUMINATION OF A 30 FOOT PERIMETER.
4. THE STANDARD 120 VOLT 3 PRONG PLUG IS EITHER ATTACHED TO THE STANDARD OUTLET OF THE WELDER OR THE MULTI-PLUG OUTLET OF THE 50 FOOT REEL CORD THAT IS PLUGGED INTO AN EXTERNAL SOURCE.
5. THE LIGHT IS A 300 WATT, ALL WEATHER, PROTECTED ELEMENT HALOGEN TYPE, WITH 4 SPARE ELEMENTS. THE MOUNT IS BOLTED TO THE REAR CENTER OF THE CROSS SUPPORT AS SHOWN.

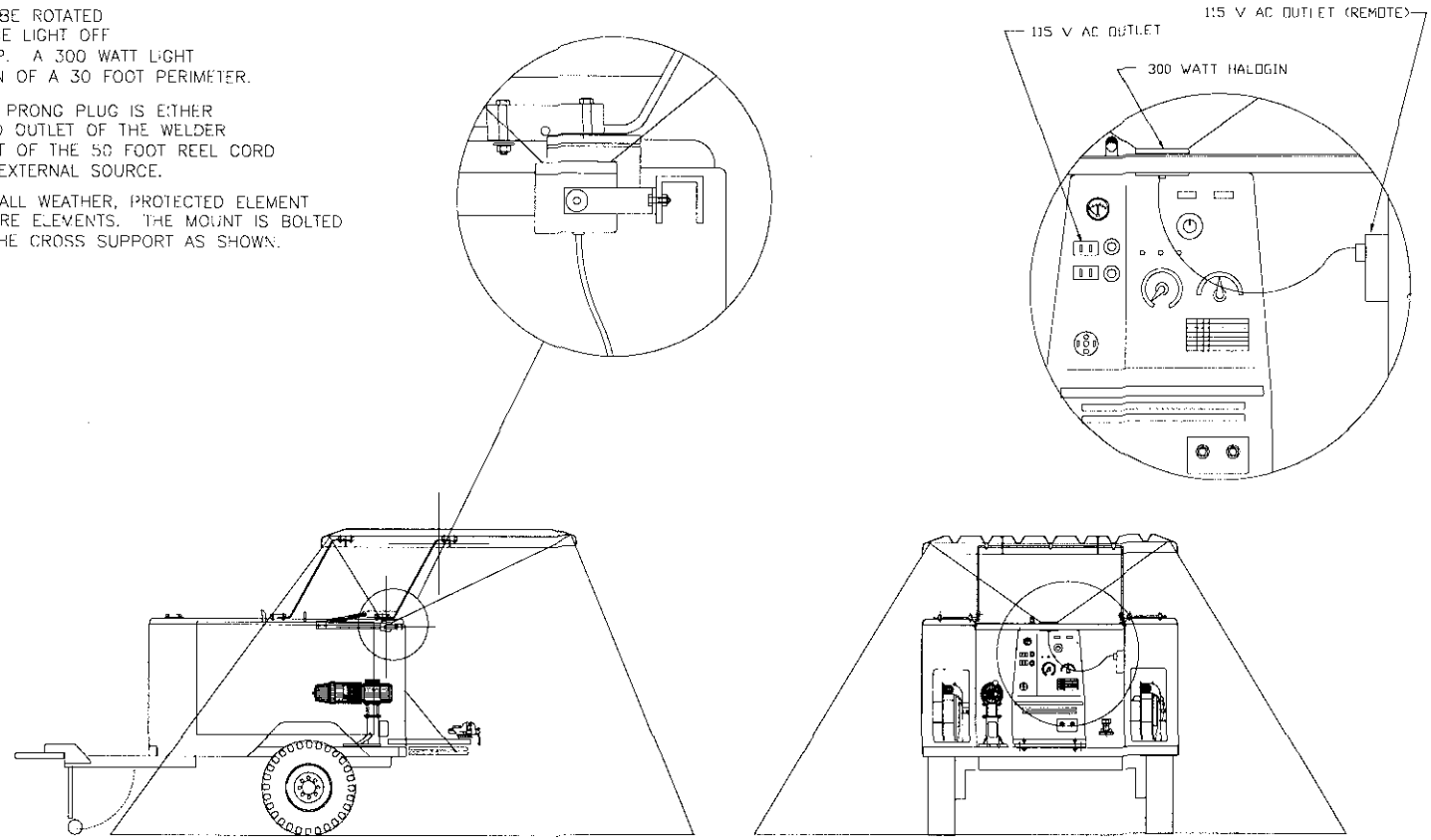

SIDE PROFILE BOUNCE LIGHTING

END PROFILE BOUNCE LIGHTING

PART NO. 04A047101

PMIC		DO NOT SCALE DRAWING	CONTRACT NUMBER	DEPARTMENT OF THE ARMY U.S. ARMY ARMAMENT RESEARCH, DEVELOPMENT AND ENGINEERING CENTER ROCK ISLAND, ILLINOIS 61299-7300
MECHANICAL PROPERTIES		UNLESS OTHERWISE SPECIFIED, DIMENSIONS ARE IN INCHES TOLERANCES ON DECIMAL 2 PL .06 3 PL .005 FRACTION E	CONTRACTOR	LIGHTING INSTALLATION HALOGIN INDIRECT
YP		THIRD ANGLE PROJECTION	DRAWN BY L.C.MCFARLAND DATE(YR-MO-DA)	
TS			CHECKER ENGINEER	
EL2			DRAWING APPROVAL	SIZE D CAGE CODE 59678 04A047101
RA				
BH	NEXT ASSY USED ON	MATL ENGR	DESIGN APPROVAL	SCALE UNIT WT. SHEET
RH	APPLICATION			

DISTRIBUTION STATEMENT A. APPROVED FOR PUBLIC RELEASE; DISTRIBUTION IS UNLIMITED.

APPLICATION	
NEXT ASSY	USED ON

REVISIONS			
LTR	DESCRIPTION	DATE	APPROVED

CAD MAINTAINED. CHANGES SHALL BE INCORPORATED BY THE DESIGN ACTIVITY.

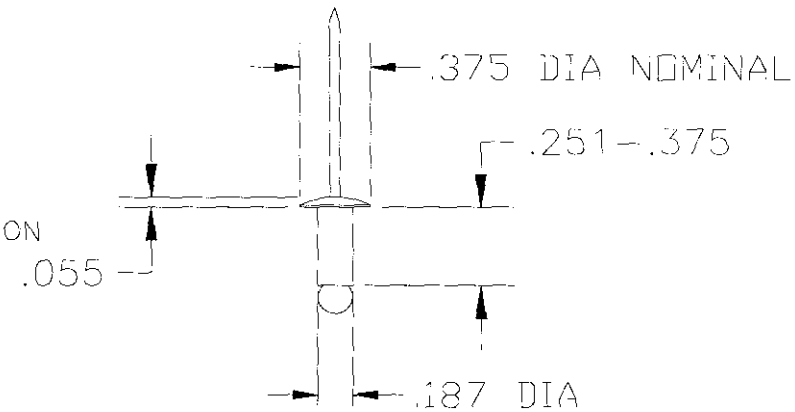

NOTES:

1. APPLICABLE STANDARDS/SPECIFICATION
   A- MIL-STD-100E
2. MATERIAL:
3. PROTECTIVE FINISH:
4. COLOR:
5. SALIENT CHARACTERISTICS
   A- THE POP-RIVET SHALL BE A 5056 ALUMINUM, DOME HEAD OPEN BODY TYPE, WITH A STEEL MANDREL.
   B- AN ALUMINUM WASHER SIZED TO FIT THE BODY DIA. SHALL BE USED WHEN THE EXPANSION SIDE RETAINS PLASTIC.
   C- HOLES SHALL BE PRE-DRILLED AT .192 DIA +.004, #11.
6. SUGGESTED SOURCE(S) LISTED ON A VENDOR ITEM DRAWING ARE NOT INTENDED TO REPRESENT THE ONLY SOURCE(S) FOR THE ITEM.
7. IDENTIFICATION OF THE SUGGESTED SOURCE(S) OF SUPPLY HEREON IS NOT TO BE CONSTRUED AS A GUARANTEE OF PRESENT OR CONTINUED AVAILABILITY AS A SOURCE OF SUPPLY FOR THE ITEM(S).

SUGGESTED SOURCE OF SUPPLY				
PART NO.	VENDOR	ADDRESS	CAGE CODE	VENDOR PART NO.
XX	BLACK & DECKER	XX	ZZ	AD66BS
		YY		

DISTRIBUTION STATEMENT A. APPROVED FOR PUBLIC RELEASE; DISTRIBUTION IS UNLIMITED.

VENDOR ITEM DRAWING PART NO.04A044108

PMIC	CONTRACT NUMBER	DEPARTMENT OF THE ARMY U.S. ARMY ARMAMENT RESEARCH, DEVELOPMENT AND ENGINEERING CENTER ROCK ISLAND, ILLINOIS 61299-7300
UNLESS OTHERWISE SPECIFIED: DIMENSIONS ARE IN INCHES TOLERANCES ON 2 PLACE 3 PLACE	CONTRACTOR	POP RIVET
	DRAWN BY L.C.MCFARLAND / DATE 98-04-10	
	CHECKER / ENGINEER	
	DRAWING APPROVAL STEVE MARRIOTT	SIZE A / CAGE CODE 59678 / 04A044108
MATL ENGR	DESIGN APPROVAL BOB RIEDL	SCALE / UNIT WT / SHEET

APPLICATION	
NEXT ASSY	USED ON

REVISIONS			
LTR	DESCRIPTION	DATE	APPROVED

CAD MAINTAINED. CHANGES SHALL BE INCORPORATED BY THE DESIGN ACTIVITY.

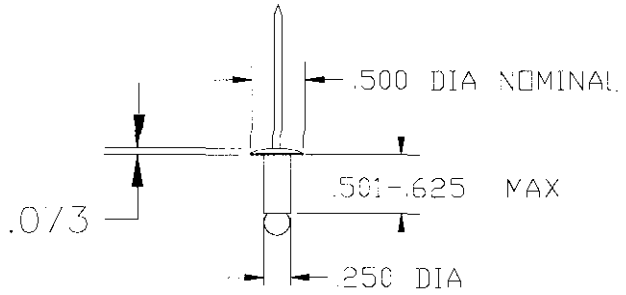

NOTES:

1. APPLICABLE STANDARDS/SPECIFICATION
   A- MIL-STD-100E
2. MATERIAL:
3. PROTECTIVE FINISH:
4. COLOR:
5. SALIENT CHARACTERISTICS
   A- THE POP-RIVET SHALL BE A 5056 ALUMINUM, DOME HEAD OPEN BODY TYPE, WITH A STEEL MANDREL.
   B- AN ALUMINUM WASHER SIZED TO FIT THE BODY DIA. SHALL BE USED WHEN THE EXPANSION SIDE RETAINS PLASTIC.
   C- HOLES SHALL BE PRE-DRILLED AT .257 DIA +.003.
6. SUGGESTED SOURCE(S) LISTED ON A VENDOR ITEM DRAWING
7. IDENTIFICATION OF THE SUGGESTED SOURCE(S) OF SUPPLY HEREON IS NOT TO BE CONSTRUED AS A GUARANTEE OF PRESENT OR CONTINUED AVAILABILITY AS A SOURCE OF SUPPLY FOR THE ITEM(S).

SUGGESTED SOURCE OF SUPPLY				
PART NO.	VENDOR	ADDRESS	CAGE CODE	VENDOR PART NO.
XX	BLACK & DECKER		ZZ	97447A145

DISTRIBUTION STATEMENT A. APPROVED FOR PUBLIC RELEASE; DISTRIBUTION IS UNLIMITED.

VENDOR ITEM DRAWING PART NO.04A044109

PMC	CONTRACT NUMBER	DEPARTMENT OF THE ARMY U.S. ARMY ARMAMENT RESEARCH, DEVELOPMENT AND ENGINEERING CENTER ROCK ISLAND, ILLINOIS 61299-7300
UNLESS OTHERWISE SPECIFIED: DIMENSIONS ARE IN INCHES TOLERANCES ON 2 PLACE 3 PLACE	CONTRACTOR	POP RIVET
	DRAWN BY L.C.MCFARLAND / DATE 98-04-10	
	CHECKER / ENGINEER	
	DRAWING APPROVAL STEVE MARRIOTT	SIZE A / CAGE CODE 59678 / 04A044109
MATL ENGR	DESIGN APPROVAL BOB RIEDL	SCALE / UNIT WT / SHEET

APPLICATION	
NEXT ASSY	USED ON

REVISIONS			
LTR	DESCRIPTION	DATE	APPROVED

CAD MAINTAINED. CHANGES SHALL BE INCORPORATED BY THE DESIGN ACTIVITY.

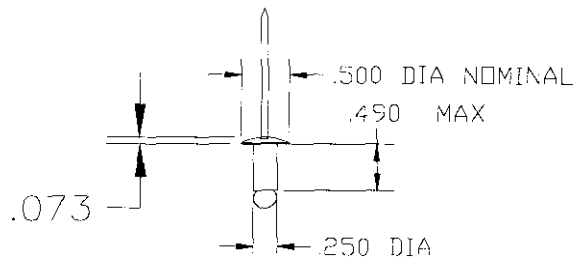

NOTES:

1. APPLICABLE STANDARDS/SPECIFICATION
   A- MIL-STD-100E
2. MATERIAL:
3. PROTECTIVE FINISH:
4. COLOR:
5. SALIENT CHARACTERISTICS
   A- THE RIVET SHALL BE A 5056 ALUMINUM OPEN HEADED CONSTRUCT WITH A STEEL MANDREL.
   B- AN ALUMINUM WASHER SIZED TO FIT THE BODY DIA. SHALL BE USED WITH EACH RIVET TO PREVENT PULL-THRU. & THE HOLES SHALL BE PRE-DRILLED AT .257 DIA +.003.
6. SUGGESTED SOURCE(S) LISTED ON A VENDOR ITEM DRAWING ARE NOT INTENDED TO REPRESENT THE ONLY SOURCE(S) FOR THE ITEM.
7. IDENTIFICATION OF THE SUGGESTED SOURCE(S) OF SUPPLY HEREON IS NOT TO BE CONSTRUED AS A GUARANTEE OF PRESENT OR CONTINUED AVAILABILITY AS A SOURCE OF SUPPLY FOR THE ITEM(S).

SUGGESTED SOURCE OF SUPPLY				
PART NO.	VENDOR	ADDRESS	CAGE CODE	VENDOR PART NO.
XX	BLACK & DECKER	XX	ZZ	AD88BS
		YY		

DISTRIBUTION STATEMENT A. APPROVED FOR PUBLIC RELEASE; DISTRIBUTION IS UNLIMITED.

VENDOR ITEM DRAWING PART NO.04A044110

PMIC	CONTRACT NUMBER	DEPARTMENT OF THE ARMY U.S. ARMY ARMAMENT RESEARCH, DEVELOPMENT AND ENGINEERING CENTER ROCK ISLAND, ILLINOIS 61299-7300
UNLESS OTHERWISE SPECIFIED: DIMENSIONS ARE IN INCHES TOLERANCES ON 2 PLACE 3 PLACE	CONTRACTOR	POP RIVET
	DRAWN BY L.C.MCFARLAND / DATE 98-04-10	
	CHECKER / ENGINEER	
	DRAWING APPROVAL STEVE MARRIOTT	SIZE A / CAGE CODE 59678 / 04A044110
MATL ENGR	DESIGN APPROVAL BOB RIEDL	SCALE / UNIT WT / SHEET

APPLICATION	
NEXT ASSY	USED ON

REVISIONS			
LTR	DESCRIPTION	DATE	APPROVED

CAD MAINTAINED. CHANGES SHALL BE INCORPORATED BY THE DESIGN ACTIVITY.

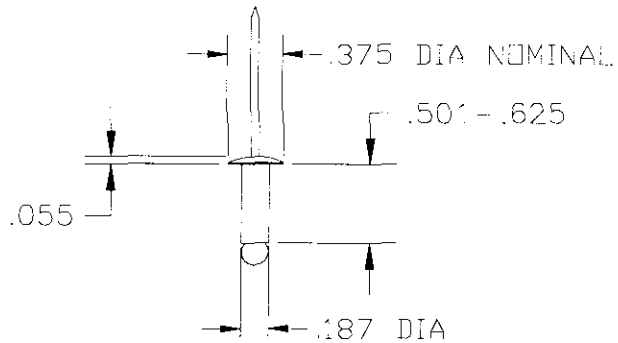

NOTES:

1. APPLICABLE STANDARDS/SPECIFICATION
   A- MIL-STD-100E
2. MATERIAL:
3. PROTECTIVE FINISH:
4. COLOR:
5. SALIENT CHARACTERISTICS
   A- THE POP-RIVET SHALL BE A 5056 ALUMINUM, DOME HEAD OPEN BODY TYPE, WITH A STEEL MANDREL.
   B- AN ALUMINUM WASHER SIZED TO FIT THE BODY DIA. SHALL BE USED WHEN THE EXPANSION SIDE RETAINS PLASTIC.
   C- HOLES SHALL BE PRE-DRILLED AT .192 DIA +.004, #11.
6. SUGGESTED SOURCE(S) LISTED ON A VENDOR ITEM DRAWING ARE NOT INTENDED TO REPRESENT THE ONLY SOURCE(S) FOR THE ITEM.
7. IDENTIFICATION OF THE SUGGESTED SOURCE(S) OF SUPPLY HEREON IS NOT TO BE CONSTRUED AS A GUARANTEE OF PRESENT OR CONTINUED AVAILABILITY AS A SOURCE OF SUPPLY FOR THE ITEM(S).

SUGGESTED SOURCE OF SUPPLY				
PART NO.	VENDOR	ADDRESS	CAGE CODE	VENDOR PART NO.
XX	BLACK & DECKER	XX YY	ZZ	AD610BS

DISTRIBUTION STATEMENT A. APPROVED FOR PUBLIC RELEASE; DISTRIBUTION IS UNLIMITED.

VENDOR ITEM DRAWING PART NO.04A044111

PMIC	CONTRACT NUMBER	DEPARTMENT OF THE ARMY U.S. ARMY ARMAMENT RESEARCH, DEVELOPMENT AND ENGINEERING CENTER ROCK ISLAND, ILLINOIS 61299-7300
UNLESS OTHERWISE SPECIFIED: DIMENSIONS ARE IN INCHES TOLERANCES ON 2 PLACE 3 PLACE	CONTRACTOR	POP RIVET
	DRAWN BY L.C.MCFARLAND / DATE 98-04-10	
	CHECKER / ENGINEER	
	DRAWING APPROVAL STEVE MARRIOTT	SIZE A / CAGE CODE 59678 / 04A044111
MATL ENGR	DESIGN APPROVAL BOB RIEDL	SCALE / UNIT WT / SHEET

APPLICATION	
NEXT ASSY	USED ON

REVISIONS			
LTR	DESCRIPTION	DATE	APPROVED

CAD MAINTAINED. CHANGES SHALL BE INCORPORATED BY THE DESIGN ACTIVITY.

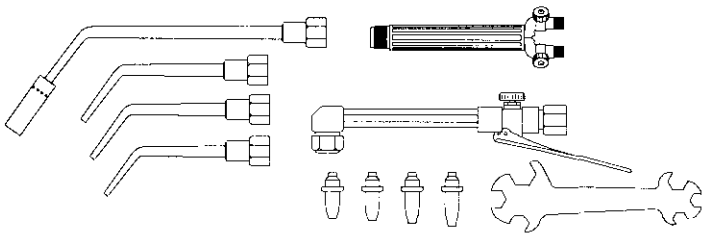

NOTES:

1. APPLICABLE STANDARDS/SPECIFICATION
   A– MIL–STD–100E

2. MATERIAL: OPTIONAL
3. PROTECTIVE FINISH: OPTIONAL
4. COLOR: OPTIONAL
5. SALIENT CHARACTERISTICS
   A– PROPYLENE, BRAZE WELD & CUTTING SET; USE WITH OXYGEN AND PROPYLENE FUEL GAS, FOR PREHEAT, BRAZING, CUTTING AND HARDENING.

   B– TORCH SET COMPONENTS MUST BE SELECTED TO MAINTAIN INTERCHANGABILITY WITH MATING TIPS, NOZZLES AND CUTTING ATTACHMENTS. THE TORCH TIPS SHALL INCLUDE .043, .064, AND .082 ORIFICES. THE CUTTING TIPS SHALL INCLUDE .038, .067, .059 AND .038 ORIFICES AND THE SET SHALL INCLUDE ONE MULTIWRENCH THAT HAS ALL REQUIRED SIZED.

   C– THE SET SHALL CONFORM TO ALL CGA AND AWS REQUIREMENTS FOR COMMERCIAL WELD EQUIPMENT. REVERSE FLOW VALVES MAY BE SEPARATE OR BUILT INTO THE HANDLE.

7. THE IMAGE IS NOT INTENDED TO BE RESTRICTIVE. FEATURES NOT SHOWN MAY VARY.
8. IDENTIFICATION OF THE SUGGESTED SOURCE(S) OF SUPPLY HEREON IS NOT TO BE CONSTRUED AS A GUARANTEE OF PRESENT OR CONTINUED AVAILABILITY AS A SOURCE OF SUPPLY FOR THE ITEM(S).

DISTRIBUTION STATEMENT A. APPROVED FOR PUBLIC RELEASE; DISTRIBUTION IS UNLIMITED.

VENDOR ITEM DRAWING

PART NO. 04A048510

PMIC	CONTRACT NUMBER	DEPARTMENT OF THE ARMY U.S. ARMY ARMAMENT RESEARCH, DEVELOPMENT AND ENGINEERING CENTER ROCK ISLAND, ILLINOIS 61299–7300
UNLESS OTHERWISE SPECIFIED: DIMENSIONS ARE IN INCHES TOLERANCES ON 2 PLACE ± 3 PLACE ±	CONTRACTOR	TORCH SET, OXY–PROPYLENE
	DRAWN BY L.C.MCFARLAND / DATE 10 NOV 94	
	CHECKER / ENGINEER	
	DRAWING APPROVAL	SIZE A / CAGE CODE 59678 / 04A048510
MATL ENGR	DESIGN APPROVAL	SCALE DO NOT / UNIT WT / SHEET

APPLICATION	
NEXT ASSY	USED ON

REVISIONS			
LTR	DESCRIPTION	DATE	APPROVED

CAD MAINTAINED. CHANGES SHALL BE INCORPORATED BY THE DESIGN ACTIVITY.

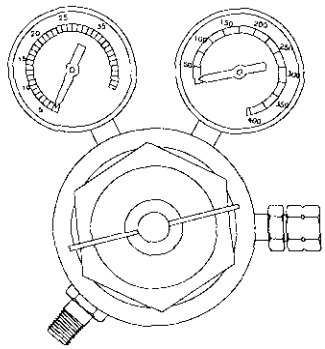

NOTES:

1. APPLICABLE STANDARDS/SPECIFICATION
   A- MIL-STD-100E
2. MATERIAL: SEE NOTE 5 B.
3. PROTECTIVE FINISH: SEE NOTE 5 B.
4. COLOR: OPTIONAL
5. SALIENT CHARACTERISTICS
   A- REGULATOR, PROPYLENE; CGA 510 INLET FOR CONNECTION TO GAS BOTTLE, SPRING LOADED DIAPHRAGM TYPE, 1-STAGE, MANUALLY ADJUSTABLE REGULATOR, OUTLET CONNECTION 5/16-18 UNF LH MALE THREADS FOR CONNECTION TO HOSE COUPLING NUT. HEAVY DUTY REGULATOR. GAGES SHALL BE 2-1/2" AND READ PSI, 0 TO 400 PSI CONTENT, 0 TO 40 PSI DELIVERY RANGE. MATERIAL, DESIGN
   B- MANUFACTURE AND PERFORMANCE SHALL COMPLY WITH CGA E-4. GAGES SHALL BE ELASTIC ELEMENT TYPE AND CONFORM TO ANSI B40.1. MARKING SHALL CONFORM TO UL 969 AND INCLUDE MODEL, & MANUFACTURER.
6. SUGGESTED SOURCE(S) LISTED ON A VENDOR ITEM DRAWING ARE NOT INTENDED TO REPRESENT THE ONLY SOURCE(S) FOR THE ITEM.
7. IDENTIFICATION OF THE SUGGESTED SOURCE(S) OF SUPPLY HEREON IS NOT TO BE CONSTRUED AS A GUARANTEE OF PRESENT OR CONTINUED AVAILABILITY AS A SOURCE OF SUPPLY FOR THE ITEM(S).

SUGGESTED SOURCE OF SUPPLY

PART NO.	VENDOR	ADDRESS	CAGE CODE	BRAND NAME SERIES P/N
	S.J. SMITH	3707 W RIVER DRIVE	63026	VICTOR VTS450, VTS4610-510
		DAVENPORT, IA	00741	AIRCO 6500, 806-6532-510
	GENTEX	902-2ND AVE	17941	UNIWELD RV80, RV812-510
		ROCK ISLAND, IL	55681	SMITH H1500A, H1500A-510

DISTRIBUTION STATEMENT A. APPROVED FOR PUBLIC RELEASE; DISTRIBUTION IS UNLIMITED.

VENDOR ITEM DRAWING

PART NO. 04A048508

PMIC	CONTRACT NUMBER	DEPARTMENT OF THE ARMY U.S. ARMY ARMAMENT RESEARCH, DEVELOPMENT AND ENGINEERING CENTER ROCK ISLAND, ILLINOIS 61299-7300
UNLESS OTHERWISE SPECIFIED: DIMENSIONS ARE IN INCHES TOLERANCES ON 2 PLACE 3 PLACE	CONTRACTOR	REGULATOR, PROPYLENE
	DRAWN BY L.C.MCFARLAND / DATE 98-04-10	
	CHECKER / ENGINEER	
	DRAWING APPROVAL STEVE MARRIOTT	SIZE A / CAGE CODE 59678 / 04A048508
MATL ENGR	DESIGN APPROVAL BOB RIEDL	SCALE / UNIT WT / SHEET

APPLICATION	
NEXT ASSY	USED ON

REVISIONS			
LTR	DESCRIPTION	DATE	APPROVED

CAD MAINTAINED. CHANGES SHALL BE INCORPORATED BY THE DESIGN ACTIVITY.

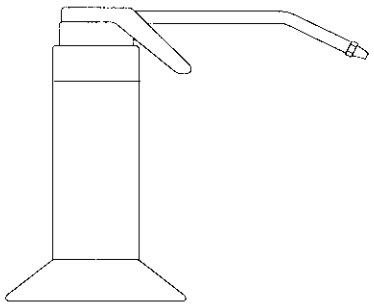

NOTES:

1. APPLICABLE STANDARDS/SPECIFICATION
   A- MIL-STD-100E, A-A-55098, TYPE 1, CL 2.
2. MATERIAL: STEEL
3. PROTECTIVE FINISH:PAINT OR GALVANIZED
4. COLOR: PER MFR
5. SALIENT CHARACTERISTICS
   A. THE CONTAINER SHALL HAVE A SUPPORT BASE.
   B. A MANUAL PUMP SHALL BE PROVIDED.
   C. THE SPOUT SHALL BE RIGID AND SUPPORT OIL BY THE DROP OR FLOW.
   D. THE OILER SHALL NOT EMPTY ITS OIL WHEN INVERTED.
   E. OILER SHALL HAVE 6 OZ VOLUME.
6. SUGGESTED SOURCE(S) LISTED ON A VENDOR ITEM DRAWING ARE NOT INTENDED TO REPRESENT THE ONLY SOURCE(S) FOR THE ITEM.
7. IDENTIFICATION OF THE SUGGESTED SOURCE(S) OF SUPPLY HEREON IS NOT TO BE CONSTRUED AS A GUARANTEE OF PRESENT OR CONTINUED AVAILABILITY AS A SOURCE OF SUPPLY FOR THE ITEM(S).

SUGGESTED SOURCE OF SUPPLY

PART NO.	VENDOR	ADDRESS	CAGE CODE	VENDOR PART NO.
CAT #103	MCMASTER CARR	CHICAGO, IL		1245K15
	630-833-0300			
Cat #386	GRANGER	961 E 53RD ST		6X810
	319-391-6015	DAVENPORT, IA 52807		

DISTRIBUTION STATEMENT A. APPROVED FOR PUBLIC RELEASE; DISTRIBUTION IS UNLIMITED.

VENDOR ITEM DRAWING

PART NO. 04A048100

PMIC	CONTRACT NUMBER	DEPARTMENT OF THE ARMY U.S. ARMY ARMAMENT RESEARCH, DEVELOPMENT AND ENGINEERING CENTER ROCK ISLAND, ILLINOIS 61299-7300
UNLESS OTHERWISE SPECIFIED: DIMENSIONS ARE IN INCHES TOLERANCES ON 2 PLACE 3 PLACE	CONTRACTOR	OILER, MANUAL W/PUMP
	DRAWN BY L.C.MCFARLAND / DATE 98-12-30	
	CHECKER / ENGINEER	
	DRAWING APPROVAL STEVE MARRIOTT	SIZE A / CAGE CODE 59678 / 04A048100
MATL ENGR	DESIGN APPROVAL BOB RIEDL	SCALE / UNIT WT / SHEET

APPLICATION	
NEXT ASSY	USED ON

REVISIONS			
LTR	DESCRIPTION	DATE	APPROVED

CAD MAINTAINED. CHANGES SHALL BE INCORPORATED BY THE DESIGN ACTIVITY.

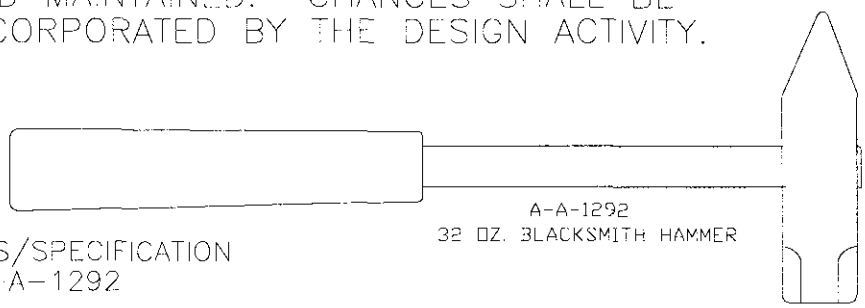

A-A-1292
32 OZ. BLACKSMITH HAMMER

NOTES:

1. APPLICABLE STANDARDS/SPECIFICATION
   A- MIL-STD-100E, A-A-1292
2. MATERIAL: STEEL AND FIBREGLASS
3. PROTECTIVE FINISH: PAINTED
4. COLOR: PER MFR
5. SALIENT CHARACTERISTICS
   A. HEAD SHALL BE 2 LB, DROP-FORGED AND HARDENED.
   B. HANDLE LENGTH SHALL BE FIBREGLASS AND APPROX. 14 INCHES LG.
   C. HEAD SHALL INCORPORATE BEVELED FLAT AND CROSS PEANED ENDS.
6. SUGGESTED SOURCE(S) LISTED ON A VENDOR ITEM DRAWING ARE NOT INTENDED TO REPRESENT THE ONLY SOURCE(S) FOR THE ITEM.
7. IDENTIFICATION OF THE SUGGESTED SOURCE(S) OF SUPPLY HEREON IS NOT TO BE CONSTRUED AS A GUARANTEE OF PRESENT OR CONTINUED AVAILABILITY AS A SOURCE OF SUPPLY FOR THE ITEM(S).

SUGGESTED SOURCE OF SUPPLY

PART NO.	VENDOR	ADDRESS	CAGE CODE	VENDOR PART NO.
CAT #103	MCMASTER CARR	CHICAGO, IL		5881A2 (B)
	630-833-0300			
Cat #386	GRANGER	961 E 53RD ST		B3-3SC
	319-391-6015	DAVENPORT, IA 52807		

DISTRIBUTION STATEMENT A. APPROVED FOR PUBLIC RELEASE; DISTRIBUTION IS UNLIMITED.

VENDOR ITEM DRAWING

PART NO. 04A048101

PMIC	CONTRACT NUMBER	DEPARTMENT OF THE ARMY U.S. ARMY ARMAMENT RESEARCH, DEVELOPMENT AND ENGINEERING CENTER ROCK ISLAND, ILLINOIS 61299-7300
UNLESS OTHERWISE SPECIFIED: DIMENSIONS ARE IN INCHES TOLERANCES ON 2 PLACE 3 PLACE	CONTRACTOR	BLACKSMITHS HAMMER
	DRAWN BY L.C.MCFARLAND / DATE 98-12-30	
	CHECKER / ENGINEER	
	DRAWING APPROVAL STEVE MARRIOTT	SIZE A / CAGE CODE 59678 / 04A048101
MATL ENGR	DESIGN APPROVAL BOB RIEDL	SCALE / UNIT WT / SHEET

APPLICATION	
NEXT ASSY	USED ON

REVISIONS			
LTR	DESCRIPTION	DATE	APPROVED

CAD MAINTAINED. CHANGES SHALL BE INCORPORATED BY THE DESIGN ACTIVITY.

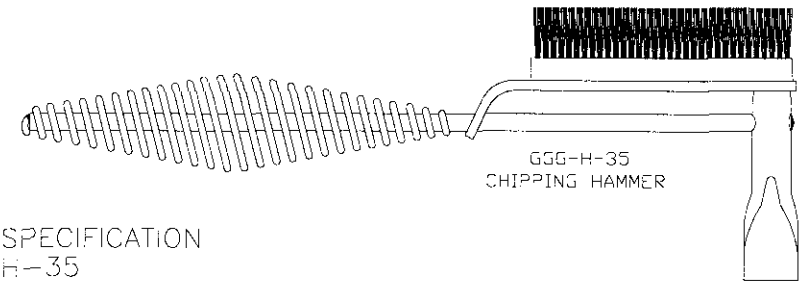

NOTES:

1. APPLICABLE STANDARDS/SPECIFICATION
   A- MIL-STD-100E, GG-H-35
2. MATERIAL: STEEL
3. PROTECTIVE FINISH: PAINTED
4. COLOR: PER MFG.
5. SALIENT CHARACTERISTICS
   A. HANDLE IS WIRE SPRING WRAP DESIGN.
   B. CHIPPING HEAD IS FORGED STEEL.
   C. SOLID SHANK HANDLE IS SPRING STEEL.
   D. WIRE BRUSH SHALL BE REPLACABLE.
6. SUGGESTED SOURCE(S) LISTED ON A VENDOR ITEM DRAWING ARE NOT INTENDED TO REPRESENT THE ONLY SOURCE(S) FOR THE ITEM.
7. IDENTIFICATION OF THE SUGGESTED SOURCE(S) OF SUPPLY HEREON IS NOT TO BE CONSTRUED AS A GUARANTEE OF PRESENT OR CONTINUED AVAILABILITY AS A SOURCE OF SUPPLY FOR THE ITEM(S).

SUGGESTED SOURCE OF SUPPLY				
PART NO.	VENDOR	ADDRESS	CAGE CODE	VENDOR PART NO.
CAT #103	MCMASTER CARR	CHICAGO, IL		7954A11
	630-833-0300			
Cat #386	GRANGER	961 E 53RD ST		4A-099
	319-391-6015	DAVENPORT, IA 52807		

DISTRIBUTION STATEMENT A. APPROVED FOR PUBLIC RELEASE; DISTRIBUTION IS UNLIMITED.

VENDOR ITEM DRAWING

PART NO. 04A048102

PMIC	CONTRACT NUMBER	DEPARTMENT OF THE ARMY U.S. ARMY ARMAMENT RESEARCH, DEVELOPMENT AND ENGINEERING CENTER ROCK ISLAND, ILLINOIS 61299-7300
UNLESS OTHERWISE SPECIFIED: DIMENSIONS ARE IN INCHES TOLERANCES ON 2 PLACE 3 PLACE	CONTRACTOR	WELDERS CHIPPING HAMMER
	DRAWN BY L.C.MCFARLAND / DATE 98-12-30	
	CHECKER / ENGINEER	
	DRAWING APPROVAL STEVE MARRIOTT	SIZE A / CAGE CODE 59678 / 04A048102
MATL ENGR	DESIGN APPROVAL BOB RIEDL	SCALE / UNIT WT / SHEET

APPLICATION	
NEXT ASSY	USED ON

REVISIONS			
LTR	DESCRIPTION	DATE	APPROVED

CAD MAINTAINED. CHANGES SHALL BE INCORPORATED BY THE DESIGN ACTIVITY.

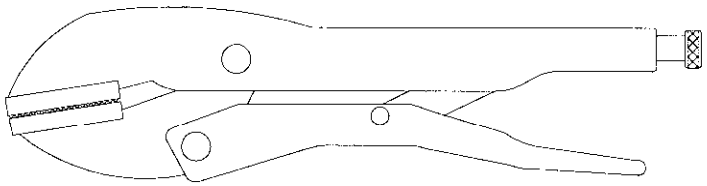

NOTES:

1. APPLICABLE STANDARDS/SPECIFICATION
   A- MIL-STD-100E
2. MATERIAL: STEEL
3. PROTECTIVE FINISH: CHROME
4. COLOR: PER MFR.
5. SALIENT CHARACTERISTICS
   A. THE FRAME SHALL BE A NOMINAL 10 INCH.
   B. GRIP SHALL BE ADJUSTABLE.
   C. THE FRAME & JAWS SHALL BE HEAT TREATED FOR HARDNESS.
   D. JAWS SHALL BE SEARATED AND STRAIGHT.
   E. FRAME AND METAL PARTS SHALL BE PLATED FOR WEAR AND CORROSION.
6. SUGGESTED SOURCE(S) LISTED ON A VENDOR ITEM DRAWING ARE NOT INTENDED TO REPRESENT THE ONLY SOURCE(S) FOR THE ITEM.
7. IDENTIFICATION OF THE SUGGESTED SOURCE(S) OF SUPPLY HEREON IS NOT TO BE CONSTRUED AS A GUARANTEE OF PRESENT OR CONTINUED AVAILABILITY AS A SOURCE OF SUPPLY FOR THE ITEM(S).

SUGGESTED SOURCE OF SUPPLY				
PART NO.	VENDOR	ADDRESS	CAGE CODE	VENDOR PART NO.
CAT #103	MCMASTER CARR	CHICAGO, IL		5369A2
	630-833-0300			
Cat #386	GRANGER	961 E 53RD ST		3A513
	319-391-6015	DAVENPORT, IA 52807		

DISTRIBUTION STATEMENT A. APPROVED FOR PUBLIC RELEASE; DISTRIBUTION IS UNLIMITED.

VENDOR ITEM DRAWING

PART NO. 04A048103

PMIC	CONTRACT NUMBER	DEPARTMENT OF THE ARMY U.S. ARMY ARMAMENT RESEARCH, DEVELOPMENT AND ENGINEERING CENTER ROCK ISLAND, ILLINOIS 61299-7300
UNLESS OTHERWISE SPECIFIED: DIMENSIONS ARE IN INCHES TOLERANCES ON 2 PLACE 3 PLACE	CONTRACTOR	LOCKING PLIER, ADJ.
	DRAWN BY L.C.MCFARLAND / DATE 98-12-30	
	CHECKER / ENGINEER	
	DRAWING APPROVAL STEVE MARRIOTT	SIZE A / CAGE CODE 59678 / 04A048103
MATL ENGR	DESIGN APPROVAL BOB RIEDL	SCALE / UNIT WT / SHEET

APPLICATION	
NEXT ASSY	USED ON

REVISIONS			
LTR	DESCRIPTION	DATE	APPROVED

CAD MAINTAINED. CHANGES SHALL BE INCORPORATED BY THE DESIGN ACTIVITY.

NOTES:

1. APPLICABLE STANDARDS/SPECIFICATION
   A- MIL-STD-100E
2. MATERIAL: DROP-FORGED STEEL
3. PROTECTIVE FINISH: PLATING.
4. COLOR:PER MFG OR CHROME
5. SALIENT CHARACTERISTICS
   A. PLIER SHALL BE NOMINAL 8 INCH.
   B. THE JAW STYLE SHALL BE STRAIGHT WITH WIRE CUTTER.
   C. THE HANDLES SHALL HAVE A KNURLED SURFACE.
   D. JAWS SHALL INCORPORATE A CURVED SEARATED PIPE GRIP.
   E. THE ASSEMBLY SHALL BE 2-PIECE, 2- POSITION.
   F. THE ASSEMBLY SHALL BE CHROME PLATED.
6. SUGGESTED SOURCE(S) LISTED ON A VENDOR ITEM DRAWING ARE NOT INTENDED TO REPRESENT THE ONLY SOURCE(S) FOR THE ITEM.
7. IDENTIFICATION OF THE SUGGESTED SOURCE(S) OF SUPPLY HEREON IS NOT TO BE CONSTRUED AS A GUARANTEE OF PRESENT OR CONTINUED AVAILABILITY AS A SOURCE OF SUPPLY FOR THE ITEM(S).

SUGGESTED SOURCE OF SUPPLY

PART NO.	VENDOR	ADDRESS	CAGE CODE	VENDOR PART NO.
CAT #103	MCMASTER CARR	CHICAGO, IL		5624A9
	630-833-0300			
Cat #386	GRANGER	961 E 53RD ST		5X630
	319-391-6015	DAVENPORT, IA 52807		

DISTRIBUTION STATEMENT A. APPROVED FOR PUBLIC RELEASE; DISTRIBUTION IS UNLIMITED.

VENDOR ITEM DRAWING

PART NO. 04A048104

PMIC	CONTRACT NUMBER	DEPARTMENT OF THE ARMY U.S. ARMY ARMAMENT RESEARCH, DEVELOPMENT AND ENGINEERING CENTER ROCK ISLAND, ILLINOIS 61299-7300
UNLESS OTHERWISE SPECIFIED: DIMENSIONS ARE IN INCHES TOLERANCES ON 2 PLACE 3 PLACE	CONTRACTOR	PLIERS, SLIP JOINT
	DRAWN BY L.C.MCFARLAND / DATE 98-12-30	
	CHECKER / ENGINEER	
	DRAWING APPROVAL STEVE MARRIOTT	SIZE A / CAGE CODE 59678 / 04A048104
MATL ENGR	DESIGN APPROVAL BOB RIEDL	SCALE / UNIT WT / SHEET

APPLICATION	
NEXT ASSY	USED ON

REVISIONS			
LTR	DESCRIPTION	DATE	APPROVED

CAD MAINTAINED. CHANGES SHALL BE INCORPORATED BY THE DESIGN ACTIVITY.

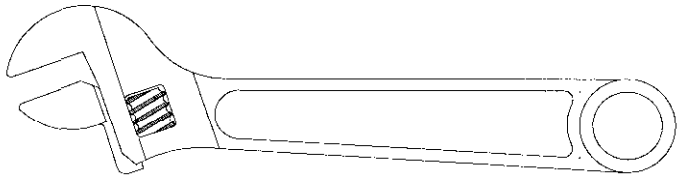

NOTES:

1. APPLICABLE STANDARDS/SPECIFICATION
   A- MIL-STD-100E, A-A-2344
2. MATERIAL: FORGED STEEL ALLOY
3. PROTECTIVE FINISH:
4. COLOR:
5. SALIENT CHARACTERISTICS
   A. WRENCH SHALL BE 8" & MADE FROM ALLOY STEEL
   B. HANDLE SHALL BE CHANNELED AND OPEN AT END.
   B. ADJUSTING NUT SHALL BE KNURLED
   C. MINIMUM WORKING OPENING IS 1-1/8 INCHES.
   D. THE HANDLE SHALL BE A PLAIN GRIP, JAWS ARE SMOOTH.
6. SUGGESTED SOURCE(S) LISTED ON A VENDOR ITEM DRAWING ARE NOT INTENDED TO REPRESENT THE ONLY SOURCE(S) FOR THE ITEM.
7. IDENTIFICATION OF THE SUGGESTED SOURCE(S) OF SUPPLY HEREON IS NOT TO BE CONSTRUED AS A GUARANTEE OF PRESENT OR CONTINUED AVAILABILITY AS A SOURCE OF SUPPLY FOR THE ITEM(S).

SUGGESTED SOURCE OF SUPPLY				
PART NO.	VENDOR	ADDRESS	CAGE CODE	VENDOR PART NO.
CAT #103	MCMASTER CARR	CHICAGO, IL		5385A14
	630-833-0300			
Cat #386	GRANGER	961 E 53RD ST		6X316
	319-391-6015	DAVENPORT, IA 52807		

DISTRIBUTION STATEMENT A. APPROVED FOR PUBLIC RELEASE; DISTRIBUTION IS UNLIMITED.

VENDOR ITEM DRAWING

PART NO. 04A048106

PMIC	CONTRACT NUMBER	DEPARTMENT OF THE ARMY U.S. ARMY ARMAMENT RESEARCH, DEVELOPMENT AND ENGINEERING CENTER ROCK ISLAND, ILLINOIS 61299-7300
UNLESS OTHERWISE SPECIFIED: DIMENSIONS ARE IN INCHES TOLERANCES ON 2 PLACE 3 PLACE	CONTRACTOR	ADJUSTABLE WRENCH
	DRAWN BY L.C.MCFARLAND / DATE 98-12-30	
	CHECKER / ENGINEER	
	DRAWING APPROVAL STEVE MARRIOTT	SIZE A / CAGE CODE 59678 / 04A048106
MATL ENGR	DESIGN APPROVAL BOB RIEDL	SCALE / UNIT WT / SHEET

APPLICATION	
NEXT ASSY	USED ON

REVISIONS			
LTR	DESCRIPTION	DATE	APPROVED

CAD MAINTAINED. CHANGES SHALL BE INCORPORATED BY THE DESIGN ACTIVITY.

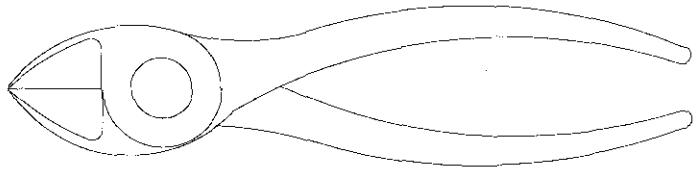

NOTES:

1. APPLICABLE STANDARDS/SPECIFICATION
   A MIL-STD-100E, A-A 2330 TYPE 1, CL 1 STY A
2. MATERIAL: STEEL FORGED ALLOY
3. PROTECTIVE FINISH: PAINTED
4. COLOR: PER MFR.
5. SALIENT CHARACTERISTICS
   A. CUTTING EDGES SHALL BE INDUCTION HARDENED.
   B. THE ASSEMBLY SHALL BE FOR CUTTING HARDENED WIRE, NAILS ETC.
   C. THE HANDLES SHALL BE PLAIN.
   D. THE PIVOT SHALL BE CLOSE TO THE CUTTING EDGES TO SUPPORT LEVERAGE.
   E. THE ASSEMBLY SHALL BE A NOMINAL 8 INCH.
6. SUGGESTED SOURCE(S) LISTED ON A VENDOR ITEM DRAWING ARE NOT INTENDED TO REPRESENT THE ONLY SOURCE(S) FOR THE ITEM.
7. IDENTIFICATION OF THE SUGGESTED SOURCE(S) OF SUPPLY HEREON IS NOT TO BE CONSTRUED AS A GUARANTEE OF PRESENT OR CONTINUED AVAILABILITY AS A SOURCE OF SUPPLY FOR THE ITEM(S).

SUGGESTED SOURCE OF SUPPLY

PART NO.	VENDOR	ADDRESS	CAGE CODE	VENDOR PART NO.
CAT #103	MCMASTER CARR	CHICAGO, IL		3719A2
	630-833-0300			
Cat #386	GRANGER	961 E 53RD ST		4A838
	319-391-6015	DAVENPORT, IA 52807		

DISTRIBUTION STATEMENT A. APPROVED FOR PUBLIC RELEASE; DISTRIBUTION IS UNLIMITED.

VENDOR ITEM DRAWING

PART NO. 04A048107

PMIC	CONTRACT NUMBER	DEPARTMENT OF THE ARMY U.S. ARMY ARMAMENT RESEARCH, DEVELOPMENT AND ENGINEERING CENTER ROCK ISLAND, ILLINOIS 61299-7300
UNLESS OTHERWISE SPECIFIED: DIMENSIONS ARE IN INCHES TOLERANCES ON 2 PLACE 3 PLACE	CONTRACTOR	WIRE CUTTER, DIAGONAL
	DRAWN BY L.C.MCFARLAND / DATE 98-12-30	
	CHECKER / ENGINEER	
	DRAWING APPROVAL STEVE MARRIOTT	SIZE A / CAGE CODE 59678 / 04A048107
MATL ENGR	DESIGN APPROVAL BOB RIEDL	SCALE / UNIT WT / SHEET

APPLICATION	
NEXT ASSY	USED ON

REVISIONS			
LTR	DESCRIPTION	DATE	APPROVED

CAD MAINTAINED. CHANGES SHALL BE INCORPORATED BY THE DESIGN ACTIVITY.

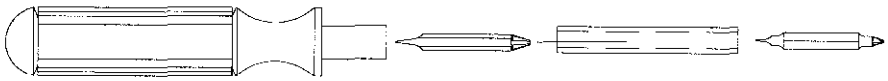

NOTES:

1. APPLICABLE STANDARDS/SPECIFICATION
   A- MIL-STD-100E
2. MATERIAL: STEEL W/PLASTIC HANDLE
3. PROTECTIVE FINISH: OPTIONAL
4. COLOR: OPTIONAL
5. SALIENT CHARACTERISTICS
   A. HOLDS MULTI-BIT REVERSABLE PHILLIPS/FLAT SCREWDRIVER BITS.
   B. SLOTTED SIZES ARE 3/16 AND 5/16 INCHES
   C. PHILLIPS SIZES ARE #1 & #2
   D. OVERALL LENGTH IS APPROX 7-1/2 INCHES.
   E. BITS SHALL BE SELF RETAINING.
6. SUGGESTED SOURCE(S) LISTED ON A VENDOR ITEM DRAWING ARE NOT INTENDED TO REPRESENT THE ONLY SOURCE(S) FOR THE ITEM.
7. THE IMAGE PROVIDED IS NOT INTENDED TO BE RESTRICTIVE. FEATURES NOT SHOWN MAY VARY.
8. IDENTIFICATION OF THE SUGGESTED SOURCE(S) OF SUPPLY HEREON IS NOT TO BE CONSTRUED AS A GUARANTEE OF PRESENT OR CONTINUED AVAILABILITY AS A SOURCE OF SUPPLY FOR THE ITEM(S).

SUGGESTED SOURCE OF SUPPLY				
PART NO.	VENDOR	ADDRESS	CAGE CODE	VENDOR PART NO.
CAT #103	MCMASTER CARR	CHICAGO, IL		6981A88
	630-833-0300			
Cat #386	GRANGER	961 E 53RD ST		5A775
	319-391-6015	DAVENPORT, IA 52807		

DISTRIBUTION STATEMENT A. APPROVED FOR PUBLIC RELEASE; DISTRIBUTION IS UNLIMITED.

VENDOR ITEM DRAWING

PART NO. 04A048108

PMIC	CONTRACT NUMBER	DEPARTMENT OF THE ARMY U.S. ARMY ARMAMENT RESEARCH, DEVELOPMENT AND ENGINEERING CENTER ROCK ISLAND, ILLINOIS 61299-7300
UNLESS OTHERWISE SPECIFIED: DIMENSIONS ARE IN INCHES TOLERANCES ON 2 PLACE 3 PLACE	CONTRACTOR	SCREW DRIVER, 4 IN 1
	DRAWN BY L.C.MCFARLAND / DATE 98-12-30	
	CHECKER / ENGINEER	
	DRAWING APPROVAL STEVE MARRIOTT	SIZE A / CAGE CODE 59678 / 04A048108
MATL ENGR	DESIGN APPROVAL BOB RIEDL	SCALE / UNIT WT / SHEET

APPLICATION	
NEXT ASSY	USED ON

REVISIONS			
LTR	DESCRIPTION	DATE	APPROVED

CAD MAINTAINED. CHANGES SHALL BE INCORPORATED BY THE DESIGN ACTIVITY.

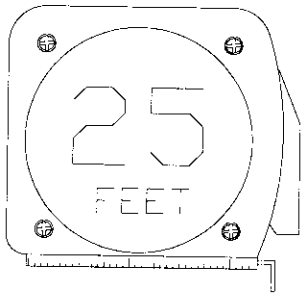

NOTES:

1. APPLICABLE STANDARDS/SPECIFICATION
   A-- MIL-STD-100E, GG-T-106
2. MATERIAL: STEEL
3. PROTECTIVE FINISH: CHROME
4. COLOR: PER MFG
5. SALIENT CHARACTERISTICS
   A. THE RULE SHALL BE 25 FOOT, AND OF COATED STEEL.
   B. CASE SHALL BE OF CHROMED METAL.
   C. THERE SHALL BE A LOCK FOR THE SPRING RETURNED RULE.
   D. THE RULE SHALL BE MARKED IN 16THS, BLACK ON YELLOW.
   E. THE CASE SHALL INCLUDE A BELT HOOK.
6. SUGGESTED SOURCE(S) LISTED ON A VENDOR ITEM DRAWING ARE NOT INTENDED TO REPRESENT THE ONLY SOURCE(S) FOR THE ITEM.
7. IDENTIFICATION OF THE SUGGESTED SOURCE(S) OF SUPPLY HEREON IS NOT TO BE CONSTRUED AS A GUARANTEE OF PRESENT OR CONTINUED AVAILABILITY AS A SOURCE OF SUPPLY FOR THE ITEM(S).

SUGGESTED SOURCE OF SUPPLY				
PART NO.	VENDOR	ADDRESS	CAGE CODE	VENDOR PART NO.
CAT #103	MCMASTER CARR	CHICAGO, IL		6802A16
	630-833-0300			
Cat #386	GRANGER	961 E 53RD ST		3X679
	319-391-6015	DAVENPORT, IA 52807		

DISTRIBUTION STATEMENT A. APPROVED FOR PUBLIC RELEASE; DISTRIBUTION IS UNLIMITED.

VENDOR ITEM DRAWING

PART NO. 04A048109

PMIC	CONTRACT NUMBER	DEPARTMENT OF THE ARMY U.S. ARMY ARMAMENT RESEARCH, DEVELOPMENT AND ENGINEERING CENTER ROCK ISLAND, ILLINOIS 61299-7300
UNLESS OTHERWISE SPECIFIED: DIMENSIONS ARE IN INCHES TOLERANCES ON 2 PLACE 3 PLACE	CONTRACTOR	TAPE, MEASURING
	DRAWN BY L.C.MCFARLAND / DATE 98-12-31	
	CHECKER / ENGINEER	
	DRAWING APPROVAL STEVE MARRIOTT	SIZE A / CAGE CODE 59678 / 04A048109
MATL ENGR	DESIGN APPROVAL BOB RIEDL	SCALE / UNIT WT / SHEET

APPLICATION	
NEXT ASSY	USED ON

REVISIONS			
LTR	DESCRIPTION	DATE	APPROVED

CAD MAINTAINED. CHANGES SHALL BE INCORPORATED BY THE DESIGN ACTIVITY.

NOTES:

1. APPLICABLE STANDARDS/SPECIFICATION
   A- MIL-STD-100E
2. MATERIAL: POLISHED STEEL
3. PROTECTIVE FINISH: POWDER COAT
4. COLOR: PER MFG.
5. SALIENT CHARACTERISTICS
   A. MEASUREMENT SIZE SHALL BE 16 X 24 INCHES.
   B. GRADUATIONS SHALL BE 1/8 INCH.
   C. RULE SHALL BE GRADUATED ON BOTH SIDES.
   D. RULE BODY SHALL BE 1/8 INCH BY 1-1/2 INCHES.
   E. THE RULE SHALL HAVE HOLES FOR HANGING.
6. SUGGESTED SOURCE(S) LISTED ON A VENDOR ITEM DRAWING ARE NOT INTENDED TO REPRESENT THE ONLY SOURCE(S) FOR THE ITEM.
7. IDENTIFICATION OF THE SUGGESTED SOURCE(S) OF SUPPLY HEREON IS NOT TO BE CONSTRUED AS A GUARANTEE OF PRESENT OR CONTINUED AVAILABILITY AS A SOURCE OF SUPPLY FOR THE ITEM(S).

SUGGESTED SOURCE OF SUPPLY				
PART NO.	VENDOR	ADDRESS	CAGE CODE	VENDOR PART NO.
CAT #103	MCMASTER CARR	CHICAGO, IL		2364A65
	630-833-0300			
Cat #386	GRANGER	961 E 53RD ST		6C226
	319-391-6015	DAVENPORT, IA 52807		

DISTRIBUTION STATEMENT A. APPROVED FOR PUBLIC RELEASE; DISTRIBUTION IS UNLIMITED.

VENDOR ITEM DRAWING

PART NO. 04A048110

PMIC	CONTRACT NUMBER	DEPARTMENT OF THE ARMY U.S. ARMY ARMAMENT RESEARCH, DEVELOPMENT AND ENGINEERING CENTER ROCK ISLAND, ILLINOIS 61299-7300
UNLESS OTHERWISE SPECIFIED: DIMENSIONS ARE IN INCHES TOLERANCES ON 2 PLACE 3 PLACE	CONTRACTOR	CARPENTERS SQUARE
	DRAWN BY L.C.MCFARLAND / DATE 98-12-30	
	CHECKER / ENGINEER	
	DRAWING APPROVAL STEVE MARRIOTT	SIZE A / CAGE CODE 59678 / 04A048110
MATL ENGR	DESIGN APPROVAL BOB RIEDL	SCALE / UNIT WT / SHEET

APPLICATION	
NEXT ASSY	USED ON

REVISIONS			
LTR	DESCRIPTION	DATE	APPROVED

CAD MAINTAINED. CHANGES SHALL BE INCORPORATED BY THE DESIGN ACTIVITY.

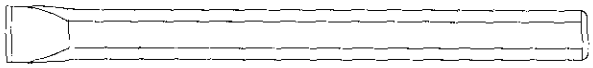

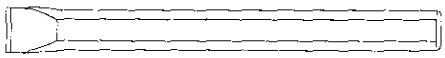

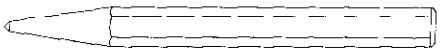

NOTES:

1. APPLICABLE STANDARDS/SPECIFICATION
   A- MIL-STD-100E, GGG-C-313, GGG-P-831.
2. MATERIAL: FORGED STEEL
3. PROTECTIVE FINISH: PAINTED
4. COLOR: PER MFG.
5. SALIENT CHARACTERISTICS
   A. THE SET SHALL CONSIST OF 2 CHISELS, 1 CENTER PUNCH.
   B. THE CHISELS SHALL BE 1 AND 1/2 INCH WIDE.
   C. EACH PIECE SHALL BE NOT LESS THAN 6 INCHES LONG.
   D. THE PIECES SHALL BE DERIVED OF HEX STEEL STOCK.
   E. THE CHISELS SHALL BE SHARP AND READY FOR USE
   F. THE STRIKE END SHALL BE BEVELED TO PREVENT CHIPPING.
6. SUGGESTED SOURCE(S) LISTED ON A VENDOR ITEM DRAWING ARE NOT INTENDED TO REPRESENT THE ONLY SOURCE(S) FOR THE ITEM.
7. IDENTIFICATION OF THE SUGGESTED SOURCE(S) OF SUPPLY HEREON IS NOT TO BE CONSTRUED AS A GUARANTEE OF PRESENT OR CONTINUED AVAILABILITY AS A SOURCE OF SUPPLY FOR THE ITEM(S).

SUGGESTED SOURCE OF SUPPLY			
PART NO.	VENDOR	ADDRESS	VENDOR PART NO.
CAT #103	MCMASTER CARR	CHICAGO, IL	3575A22, 3575A18, 3415A39
	630-833-0300		
Cat #386	GRANGER	961 E 53RD ST	
	319-391-6015	DAVENPORT, IA 52807	

DISTRIBUTION STATEMENT A. APPROVED FOR PUBLIC RELEASE; DISTRIBUTION IS UNLIMITED.

VENDOR ITEM DRAWING

PART NO. 04A048111

PMIC	CONTRACT NUMBER	DEPARTMENT OF THE ARMY U.S. ARMY ARMAMENT RESEARCH, DEVELOPMENT AND ENGINEERING CENTER ROCK ISLAND, ILLINOIS 61299-7300
UNLESS OTHERWISE SPECIFIED: DIMENSIONS ARE IN INCHES TOLERANCES ON 2 PLACE 3 PLACE	CONTRACTOR	PUNCH & CHISEL SET
	DRAWN BY L.C.MCFARLAND / DATE 98-12-31	
	CHECKER / ENGINEER	
	DRAWING APPROVAL STEVE MARRIOTT	SIZE A / CAGE CODE 59678 / 04A048111
MATL ENGR	DESIGN APPROVAL BOB RIEDL	SCALE / UNIT WT / SHEET

APPLICATION	
NEXT ASSY	USED ON

REVISIONS			
LTR	DESCRIPTION	DATE	APPROVED

CAD MAINTAINED. CHANGES SHALL BE INCORPORATED BY THE DESIGN ACTIVITY.

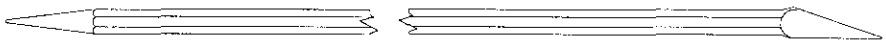

NOTES:

1. APPLICABLE STANDARDS/SPECIFICATION
   A- MIL-STD-100E
2. MATERIAL: FORGED STEEL
3. PROTECTIVE FINISH: PAINT
4. COLOR: PER MFG
5. SALIENT CHARACTERISTICS
   A. THE PRY BAR SHALL BE APPROX 18 INCHES LONG.
   B. ONE END SHALL BE POINTED.
   C. ONE END SHALL BE OFFSET WEDGE SHAPED.
   D. THE BODY SHALL BE OF 3/4 INCH HEX STOCK.
6. SUGGESTED SOURCE(S) LISTED ON A VENDOR ITEM DRAWING ARE NOT INTENDED TO REPRESENT THE ONLY SOURCE(S) FOR THE ITEM.
7. IDENTIFICATION OF THE SUGGESTED SOURCE(S) OF SUPPLY HEREON IS NOT TO BE CONSTRUED AS A GUARANTEE OF PRESENT OR CONTINUED AVAILABILITY AS A SOURCE OF SUPPLY FOR THE ITEM(S).

SUGGESTED SOURCE OF SUPPLY			
PART NO.	VENDOR	ADDRESS	VENDOR PART NO.
CAT #103	MCMASTER CARR	CHICAGO, IL	58875A55
	630-833-0300		
Cat #386	GRANGER	961 E 53RD ST	3R548
	319-391-6015	DAVENPORT, IA 52807	

DISTRIBUTION STATEMENT A. APPROVED FOR PUBLIC RELEASE; DISTRIBUTION IS UNLIMITED.

VENDOR ITEM DRAWING

PART NO. 04A048112

PMIC	CONTRACT NUMBER	DEPARTMENT OF THE ARMY U.S. ARMY ARMAMENT RESEARCH, DEVELOPMENT AND ENGINEERING CENTER ROCK ISLAND, ILLINOIS 61299-7300
UNLESS OTHERWISE SPECIFIED: DIMENSIONS ARE IN INCHES TOLERANCES ON 2 PLACE 3 PLACE	CONTRACTOR	PRY BAR
	DRAWN BY L.C.MCFARLAND / DATE 98-12-31	
	CHECKER / ENGINEER	
	DRAWING APPROVAL STEVE MARRIOTT	SIZE A / CAGE CODE 59678 / 04A048112
MATL ENGR	DESIGN APPROVAL BOB RIEDL	SCALE / UNIT WT / SHEET

APPLICATION	
NEXT ASSY	USED ON

REVISIONS			
LTR	DESCRIPTION	DATE	APPROVED

CAD MAINTAINED. CHANGES SHALL BE INCORPORATED BY THE DESIGN ACTIVITY.

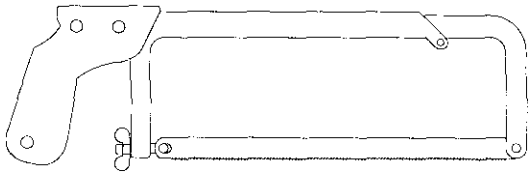

NOTES:

1. APPLICABLE STANDARDS/SPECIFICATION
   A- MIL-STD-100E, AA-453
2. MATERIAL: STEEL
3. PROTECTIVE FINISH: CHROME
4. COLOR: PER MFG
5. SALIENT CHARACTERISTICS
   A. THE SAW SHALL BE EXTENSIBLE FOR 10 TO 12 INCH BLADES.
   B. THE FRAME SHALL BE MADE OF STEEL.
   C. THE HANDLE SHALL BE MADE OF A BREAK RESISTANT PLASTIC.
   D. TIGHTENING THE BLADE SHALL BE ENABLED BY WING-NUT.
   E. THE BLADE ATTACHMENTS SHALL PERMIT 4 DIRECTION INSTALLATION.
   F. THE THROAT DEPTH SHALL BE NOT LESS THAN 3-1/2 INCHES.
6. SUGGESTED SOURCE(S) LISTED ON A VENDOR ITEM DRAWING ARE NOT INTENDED TO REPRESENT THE ONLY SOURCE(S) FOR THE ITEM.
7. IDENTIFICATION OF THE SUGGESTED SOURCE(S) OF SUPPLY HEREON IS NOT TO BE CONSTRUED AS A GUARANTEE OF PRESENT OR CONTINUED AVAILABILITY AS A SOURCE OF SUPPLY FOR THE ITEM(S).

SUGGESTED SOURCE OF SUPPLY			
PART NO.	VENDOR	ADDRESS	VENDOR PART NO.
CAT #103	MCMASTER CARR	CHICAGO, IL	4077A1
	630-833-0300		
Cat #386	GRANGER	961 E 53RD ST	5C928
	319-391-6015	DAVENPORT, IA 52807	

DISTRIBUTION STATEMENT A. APPROVED FOR PUBLIC RELEASE; DISTRIBUTION IS UNLIMITED.

VENDOR ITEM DRAWING

PART NO. 04A048113

PMIC	CONTRACT NUMBER	DEPARTMENT OF THE ARMY U.S. ARMY ARMAMENT RESEARCH, DEVELOPMENT AND ENGINEERING CENTER ROCK ISLAND, ILLINOIS 61299-7300
UNLESS OTHERWISE SPECIFIED: DIMENSIONS ARE IN INCHES TOLERANCES ON 2 PLACE 3 PLACE	CONTRACTOR	HACKSAW, MANUAL
	DRAWN BY L.C.MCFARLAND / DATE 98-12-31	
	CHECKER / ENGINEER	
	DRAWING APPROVAL STEVE MARRIOTT	SIZE A / CAGE CODE 59678 / 04A048113
MATL ENGR	DESIGN APPROVAL BOB RIEDL	SCALE / UNIT WT / SHEET

APPLICATION	
NEXT ASSY	USED ON

REVISIONS			
LTR	DESCRIPTION	DATE	APPROVED

CAD MAINTAINED. CHANGES SHALL BE INCORPORATED BY THE DESIGN ACTIVITY.

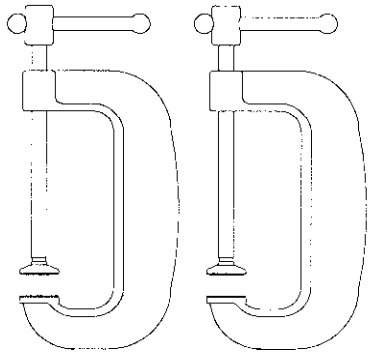

NOTES:

1. APPLICABLE STANDARDS/SPECIFICATION
   A- MIL-STD-100E, AA-429, AA-431D.
2. MATERIAL: DROP FORGED STEEL
3. PROTECTIVE FINISH: PAINT
4. COLOR: PER MFR
5. SALIENT CHARACTERISTICS
   A. THE CLAMP SHALL BE FREE OF ANY SHARP EDGES.
   B. THE 4 INCH CLAMPS SHALL HAVE A 4100 LB LOAD LIMIT.
   C. BOTH CLAMPS SHALL HAVE SWIVEL HANDLES, SCREWS AND SLIDING HANDLES.
   D. THE THROAT OF THE CLAMP SHALL BE OF THE REGULAR PATTERN.
   E. THE BODY AND PARTS SHALL BE ZINC PLATED.
6. SUGGESTED SOURCE(S) LISTED ON A VENDOR ITEM DRAWING ARE NOT INTENDED TO REPRESENT THE ONLY SOURCE(S) FOR THE ITEM.
7. IDENTIFICATION OF THE SUGGESTED SOURCE(S) OF SUPPLY HEREON IS NOT TO BE CONSTRUED AS A GUARANTEE OF PRESENT OR CONTINUED AVAILABILITY AS A SOURCE OF SUPPLY FOR THE ITEM(S).

SUGGESTED SOURCE OF SUPPLY			
PART NO.	VENDOR	ADDRESS	VENDOR PART NO.
CAT #103	MCMASTER CARR	CHICAGO, IL	5165A23, 5165A24
	630-833-0300		
Cat #386	GRANGER	961 E 53RD ST	5C817, 6X940
	319-391-6015	DAVENPORT, IA 52807	

DISTRIBUTION STATEMENT A. APPROVED FOR PUBLIC RELEASE; DISTRIBUTION IS UNLIMITED.

VENDOR ITEM DRAWING

PART NO. 04A048114

PMIC	CONTRACT NUMBER	DEPARTMENT OF THE ARMY U.S. ARMY ARMAMENT RESEARCH, DEVELOPMENT AND ENGINEERING CENTER ROCK ISLAND, ILLINOIS 61299-7300
UNLESS OTHERWISE SPECIFIED: DIMENSIONS ARE IN INCHES TOLERANCES ON 2 PLACE 3 PLACE	CONTRACTOR	C-CLAMPS
	DRAWN BY L.C.MCFARLAND / DATE 98-12-31	
	CHECKER / ENGINEER	
	DRAWING APPROVAL STEVE MARRIOTT	SIZE A / CAGE CODE 59678 / 04A048114
MATL ENGR	DESIGN APPROVAL BOB RIEDL	SCALE / UNIT WT / SHEET

APPLICATION	
NEXT ASSY	USED ON

REVISIONS			
LTR	DESCRIPTION	DATE	APPROVED

CAD MAINTAINED. CHANGES SHALL BE INCORPORATED BY THE DESIGN ACTIVITY.

9" ALUMINUM TORPEDO LEVEL

NOTES:

1. APPLICABLE STANDARDS/SPECIFICATION
   A-- MIL-STD--100E
2. MATERIAL: OPTIONAL
3. PROTECTIVE FINISH: OPTIONAL
4. COLOR: OPTIONAL
5. SALIENT CHARACTERISTICS
   A. THE LEVEL SHALL BE AT LEAST 9 INCHES LONG.
   B. BUBBLE LEVELS AT 0, 90 AND 45 DEGREES SHALL BE PROVIDED.
   C. THE BODY OF THE LEVEL SHALL HAVE NO SHARP EDGES.
   D. THE LEVEL SHALL BE ACCURATE TO INDUSTRY BEST PRACTICE.
   E. THE LEVEL SHALL HAVE A PIPE GROOVE ALONG THE LENGTH OF ONE SIDE.
   F. A MAGNETIC STRIP SHALL BE ATTACHED TO ONE FACE.
6. SUGGESTED SOURCE(S) LISTED ON A VENDOR ITEM DRAWING ARE NOT INTENDED TO REPRESENT THE ONLY SOURCE(S) FOR THE ITEM.
7. THE IMAGE PROVIDED IS FOR ILLUSTRATION AND IS NOT INTENDED TO BE RESTRICTIVE. FEATURES NOT SPECIFIED HEREIN MAY VARY.
8. IDENTIFICATION OF THE SUGGESTED SOURCE(S) OF SUPPLY HEREON IS NOT TO BE CONSTRUED AS A GUARANTEE OF PRESENT OR CONTINUED AVAILABILITY AS A SOURCE OF SUPPLY FOR THE ITEM(S).

SUGGESTED SOURCE OF SUPPLY				
PART NO.	VENDOR	ADDRESS	CAGE CODE	VENDOR PART NO.
CATALOG 103	MCMASTER-CARR	PO BOX 4355		2151A45
		CHICAGO, IL 60126	PH 630-833-0300	
CATALOG 386	GRANGER	691 E 53RD ST		6X995
		DAVENPORT, IA 52807	PH 630-833-0300	

DISTRIBUTION STATEMENT A. APPROVED FOR PUBLIC RELEASE; DISTRIBUTION IS UNLIMITED.

VENDOR ITEM DRAWING

PART NO. 04A048116

PMIC	CONTRACT NUMBER	DEPARTMENT OF THE ARMY U.S. ARMY ARMAMENT RESEARCH, DEVELOPMENT AND ENGINEERING CENTER ROCK ISLAND, ILLINOIS 61299-7300
UNLESS OTHERWISE SPECIFIED: DIMENSIONS ARE IN INCHES TOLERANCES ON 2 PLACE 3 PLACE	CONTRACTOR	TORPEDO LEVEL
	DRAWN BY L.C.MCFARLAND / DATE 98-11-12	
	CHECKER / ENGINEER	
	DRAWING APPROVAL STEVE MARRIOTT	SIZE A / CAGE CODE 59678 / 04A048116
MATL ENGR	DESIGN APPROVAL BOB RIEDL	SCALE / UNIT WT / SHEET

APPLICATION	
NEXT ASSY	USED ON

REVISIONS			
LTR	DESCRIPTION	DATE	APPROVED

CAD MAINTAINED. CHANGES SHALL BE INCORPORATED BY THE DESIGN ACTIVITY.

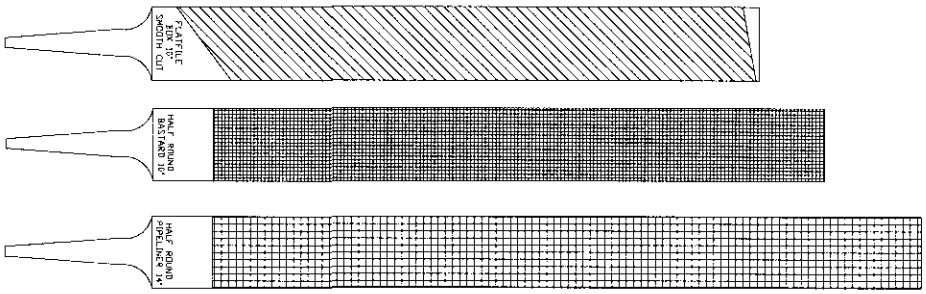

NOTES:

1. APPLICABLE STANDARDS/SPECIFICATION
   A- MIL-STD-100E
2. MATERIAL: STEEL
3. PROTECTIVE FINISH: NONE
4. COLOR:
5. SALIENT CHARACTERISTICS
   A. THE SET SHALL INCLUDE ONE 10 INCH BOX, SMOOTH-CUT FLATFILE, ONE 12 INCH HALF ROUND BASTARD, AND ONE 14 INCH HALF ROUND PIPELINER.
   B. THE SET SHALL BE FABRICATED FOR METALWORKING.
6. SUGGESTED SOURCE(S) LISTED ON A VENDOR ITEM DRAWING ARE NOT INTENDED TO REPRESENT THE ONLY SOURCE(S) FOR THE ITEM.
7. IDENTIFICATION OF THE SUGGESTED SOURCE(S) OF SUPPLY HEREON IS NOT TO BE CONSTRUED AS A GUARANTEE OF PRESENT OR CONTINUED AVAILABILITY AS A SOURCE OF SUPPLY FOR THE ITEM(S).

SUGGESTED SOURCE OF SUPPLY				
PART NO.	VENDOR	ADDRESS	CAGE	VENDOR PART NO.
CATALOG 103	MCMASTER-CARR	PO BOX 4355	ZZ	4219A34, 4221A14, & 4221A16
		CHICAGO, IL 60126	PH 630-833-0300	
CATALOG 386	GRANGER	691 E 53RD ST	ZZ	6A633, 2A500, & 6C962
		DAVENPORT, IA 52807	PH 630-833-0300	

DISTRIBUTION STATEMENT A. APPROVED FOR PUBLIC RELEASE; DISTRIBUTION IS UNLIMITED.

VENDOR ITEM DRAWING

PART NO. 04A048117

PMIC	CONTRACT NUMBER	DEPARTMENT OF THE ARMY U.S. ARMY ARMAMENT RESEARCH, DEVELOPMENT AND ENGINEERING CENTER ROCK ISLAND, ILLINOIS 61299-7300
UNLESS OTHERWISE SPECIFIED: DIMENSIONS ARE IN INCHES TOLERANCES ON 2 PLACE 3 PLACE	CONTRACTOR	FILE SET, 3 PIECE
	DRAWN BY L.C.MCFARLAND / DATE 98-11-12	
	CHECKER / ENGINEER	
	DRAWING APPROVAL STEVE MARRIOTT	SIZE A / CAGE CODE 59678 / 04A048117
MATL ENGR	DESIGN APPROVAL BOB RIEDL	SCALE / UNIT WT / SHEET

APPLICATION	
NEXT ASSY	USED ON

REVISIONS			
LTR	DESCRIPTION	DATE	APPROVED

CAD MAINTAINED. CHANGES SHALL BE INCORPORATED BY THE DESIGN ACTIVITY.

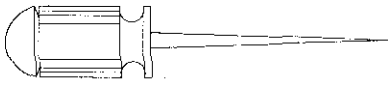

NOTES:

1. APPLICABLE STANDARDS/SPECIFICATION
   A- MIL-STD-100E, GGG-891
2. MATERIAL: ALLOY STEEL
3. PROTECTIVE FINISH: CHROME
4. COLOR: PER MFR
5. SALIENT CHARACTERISTICS
   A. THE BLADE SHALL BE A LONG TAPER OF 3 INCHES OR MORE.
   B. THE HANDLE SHALL BE MOLDED AROUND THE IMBEDDED BLADE.
   C. THE STEEL FERRULE AND CAP SHALL PRECLUDE INJURY.
   E. THE POINT SHALL ENABLE MARKING AND SCRIBING METALS.
6. SUGGESTED SOURCE(S) LISTED ON A VENDOR ITEM DRAWING ARE NOT INTENDED TO REPRESENT THE ONLY SOURCE(S) FOR THE ITEM.
7. IDENTIFICATION OF THE SUGGESTED SOURCE(S) OF SUPPLY HEREON IS NOT TO BE CONSTRUED AS A GUARANTEE OF PRESENT OR CONTINUED AVAILABILITY AS A SOURCE OF SUPPLY FOR THE ITEM(S).

SUGGESTED SOURCE OF SUPPLY

PART NO.	VENDOR	ADDRESS	VENDOR PART NO.
CAT #103	MCMASTER CARR	CHICAGO, IL	19195A22
	630-833-0300		
Cat #386	GRANGER	961 E 53RD ST	5C595
	319-391-6015	DAVENPORT, IA 52807	

DISTRIBUTION STATEMENT A. APPROVED FOR PUBLIC RELEASE; DISTRIBUTION IS UNLIMITED.

VENDOR ITEM DRAWING

PART NO. 04A048118

PMIC	CONTRACT NUMBER	DEPARTMENT OF THE ARMY U.S. ARMY ARMAMENT RESEARCH, DEVELOPMENT AND ENGINEERING CENTER ROCK ISLAND, ILLINOIS 61299-7300
UNLESS OTHERWISE SPECIFIED: DIMENSIONS ARE IN INCHES TOLERANCES ON 2 PLACE 3 PLACE	CONTRACTOR	SCRATCH AWL
	DRAWN BY L.C.MCFARLAND / DATE 98-12-31	
	CHECKER / ENGINEER	
	DRAWING APPROVAL STEVE MARRIOTT	SIZE A / CAGE CODE 59678 / 04A048118
MATL ENGR	DESIGN APPROVAL BOB RIEDL	SCALE / UNIT WT / SHEET

APPLICATION	
NEXT ASSY	USED ON

REVISIONS			
LTR	DESCRIPTION	DATE	APPROVED

CAD MAINTAINED. CHANGES SHALL BE INCORPORATED BY THE DESIGN ACTIVITY.

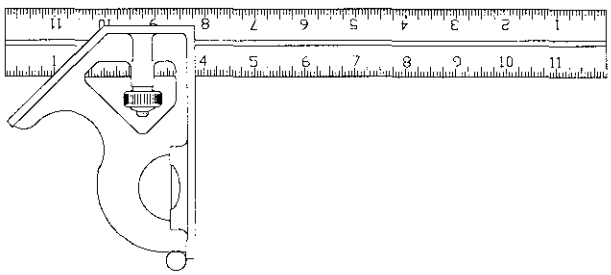

NOTES:

1. APPLICABLE STANDARDS/SPECIFICATION
   A-- MIL-STD-100E
2. MATERIAL: CAST IRON HEAD
3. PROTECTIVE FINISH: RUST RESISTANT
4. COLOR: PER MFG.
5. SALIENT CHARACTERISTICS
   A. RULE SHALL BE STEEL, 12 INCHES LONG.
   B. ANGLES SUPPORTED SHALL BE 90 AND 45 DEGREES.
   C. THE HEAD SHALL INCORPORATE A BUBBLE LEVEL 90 DEGREES TO THE RULE.
   D. THE BODY SHALL ALSO HAVE A SCRIBER.
   E. GRADUATIONS SHALL BE 1/8, 1/16, AND 1/32ND INCHES.
6. SUGGESTED SOURCE(S) LISTED ON A VENDOR ITEM DRAWING ARE NOT INTENDED TO REPRESENT THE ONLY SOURCE(S) FOR THE ITEM.
7. IDENTIFICATION OF THE SUGGESTED SOURCE(S) OF SUPPLY HEREON IS NOT TO BE CONSTRUED AS A GUARANTEE OF PRESENT OR CONTINUED AVAILABILITY AS A SOURCE OF SUPPLY FOR THE ITEM(S).

SUGGESTED SOURCE OF SUPPLY				
PART NO.	VENDOR	ADDRESS	CAGE CODE	VENDOR PART NO.
CAT #103	MCMASTER CARR	CHICAGO, IL		2007A2
	630-833-0300			
Cat #386	GRANGER	961 E 53RD ST		6C229
	319-391-6015	DAVENPORT, IA 52807		

DISTRIBUTION STATEMENT A. APPROVED FOR PUBLIC RELEASE; DISTRIBUTION IS UNLIMITED.

VENDOR ITEM DRAWING

PART NO. 04A048119

PMIC	CONTRACT NUMBER	DEPARTMENT OF THE ARMY U.S. ARMY ARMAMENT RESEARCH, DEVELOPMENT AND ENGINEERING CENTER ROCK ISLAND, ILLINOIS 61299-7300
UNLESS OTHERWISE SPECIFIED: DIMENSIONS ARE IN INCHES TOLERANCES ON 2 PLACE 3 PLACE	CONTRACTOR	COMBINATION SQUARE
	DRAWN BY L.C.MCFARLAND / DATE 98-12-31	
	CHECKER / ENGINEER	
	DRAWING APPROVAL STEVE MARRIOTT	SIZE A / CAGE CODE 59678 / 04A048119
MATL ENGR	DESIGN APPROVAL BOB RIEDL	SCALE / UNIT WT / SHEET

APPLICATION	
NEXT ASSY	USED ON

REVISIONS			
LTR	DESCRIPTION	DATE	APPROVED

CAD MAINTAINED. CHANGES SHALL BE INCORPORATED BY THE DESIGN ACTIVITY.

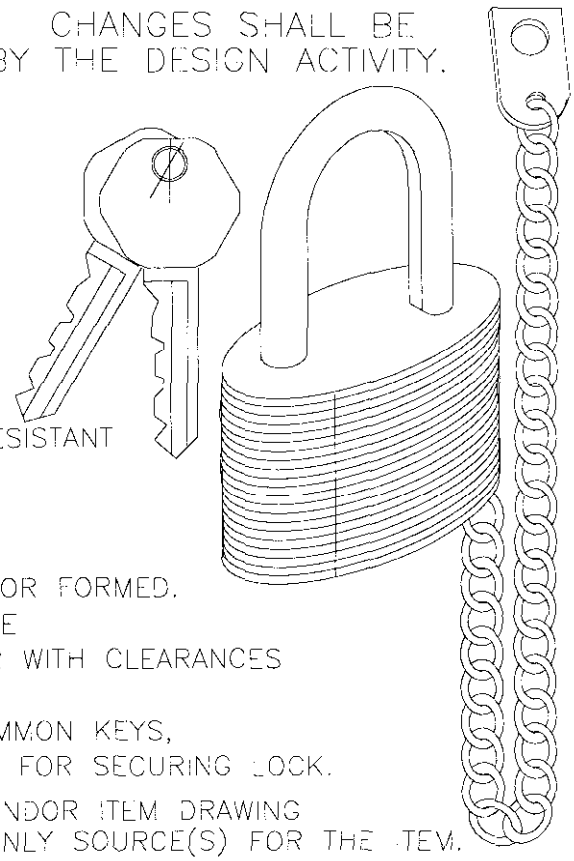

NOTES:

1. APPLICABLE STANDARDS/SPECIFICATION
   A- MIL-STD-100E
2. MATERIAL: HI-STRENGTH, CORROSION RESISTANT
3. PROTECTIVE FINISH: NONE
4. COLOR: NATURAL FINISH
5. SALIENT CHARACTERISTICS
   A. CONSTRUCTION, LAMINATED, SOLID OR FORMED.
   B. KEY COMBINATIONS, 5000 OR MORE
   C. SHANK SIZE, .25 TO .31 DIAMETER WITH CLEARANCES FOR FIT OF .688 TO .750 INCHES.
   D. PROVIDED IN SETS OF 4 WITH COMMON KEYS, 2 EACH & AN ATTACHED 9" CHAIN FOR SECURING LOCK.
6. SUGGESTED SOURCE(S) LISTED ON A VENDOR ITEM DRAWING ARE NOT INTENDED TO REPRESENT THE ONLY SOURCE(S) FOR THE ITEM.
7. IDENTIFICATION OF THE SUGGESTED SOURCE(S) OF SUPPLY HEREON IS NOT TO BE CONSTRUED AS A GUARANTEE OF PRESENT OR CONTINUED AVAILABILITY AS A SOURCE OF SUPPLY FOR THE ITEM(S).

SUGGESTED SOURCE OF SUPPLY				
PART NO.	VENDOR	ADDRESS	CAGE CODE	VENDOR PART NO.
XX	MCMASTER CARR	CHICAGO, IL	ZZ	1177A14
		PH 630-833-0300		
	GRANGER	DAVENPORT, IA		STOCK NO. 6T407
		PH 319-391-6015		625KA-10G014

DISTRIBUTION STATEMENT A. APPROVED FOR PUBLIC RELEASE; DISTRIBUTION IS UNLIMITED.

VENDOR ITEM DRAWING

PART NO. 04A048905

PMIC	CONTRACT NUMBER	DEPARTMENT OF THE ARMY U.S. ARMY ARMAMENT RESEARCH, DEVELOPMENT AND ENGINEERING CENTER ROCK ISLAND, ILLINOIS 61299-7300
UNLESS OTHERWISE SPECIFIED: DIMENSIONS ARE IN INCHES TOLERANCES ON 2 PLACE 3 PLACE	CONTRACTOR	LOCKS AND KEYS
	DRAWN BY L.C.MCFARLAND / DATE 98-04-10	
	CHECKER / ENGINEER	

NOTES:

1. APPLICABLE STANDARDS/SPECIFICATIONS
   A MIL-STD-100
2. PROTECTIVE FINISH:
3. COLOR
4. SALIENT CHARACTERISTICS: THIS DRAWING DESCRIBES HAND TOOLS CONTAINED WITHIN TOOL BOX DRAWING 04A048000.
2. SUGGESTED SOURCES LISTED ARE NOT TO BE CONSTRUED AS THE ONLY SOURCES OR GUARANTEE AVAILABILITY FROM THEM.

SUGGESTED SOURCE OF SUPPLY				
PART NO.	VENDOR	ADDRESS	CAGE CODE	VENDOR PART NO.
	MCMASTER CARR	CHICAGO, IL		
	630-833-0300			
	GRANGER	981 E 53RD ST		
	319-391-6015	DAVENPORT, IA 52807		

COMMERCIAL ITEM DESCRIPTION		
DRAWING NO.	DET.NO.	ITEM NOMENCLATURE & DESCRIPTION
04A048100	1	HAND OILER WITH PUMP, METAL 6 OZ.
04A048101	2	HAMMER 16 OZ.
04A048102	3	CHIPPING HAMMER
04A048103	4	VISE GRIP PLIER
04A048104	5	PLIER, SLIP JAW
04A048105	6	
04A048106	7	10" ADJUSTABLE CRESENT WRENCH
04A048107	8	WIRE CUTTER DIAGONAL
04A048108	9	SCREW DRIVER 4 IN 1
04A048109	10	25 FT TAPE MEASURE
04A048110	11	STEEL SQUARE 16 X 24
04A048111	12	CHISEL AND PUNCH SET 3 PIECE
04A048112	13	PRY BAR 36" CHISEL AND POINT ENDS
04A048113	14	HACKSAW 10-12" CAPACITY
04A048114	15	3 & 4 INCH C-CLAMPS
04A048115	16	4" MACHINIST'S VISE (SEE DRAWING)
04A048116	17	6" TORPEDO LEVEL
04A048117	18	FILE SET, WELDERS 3 PIECE
04A048118	19	AWL/SCRIBE
04A048119	20	COMBINATION SQUARE, 12" W/ LEVEL
04A048120	21	FILE HANDLES (2)

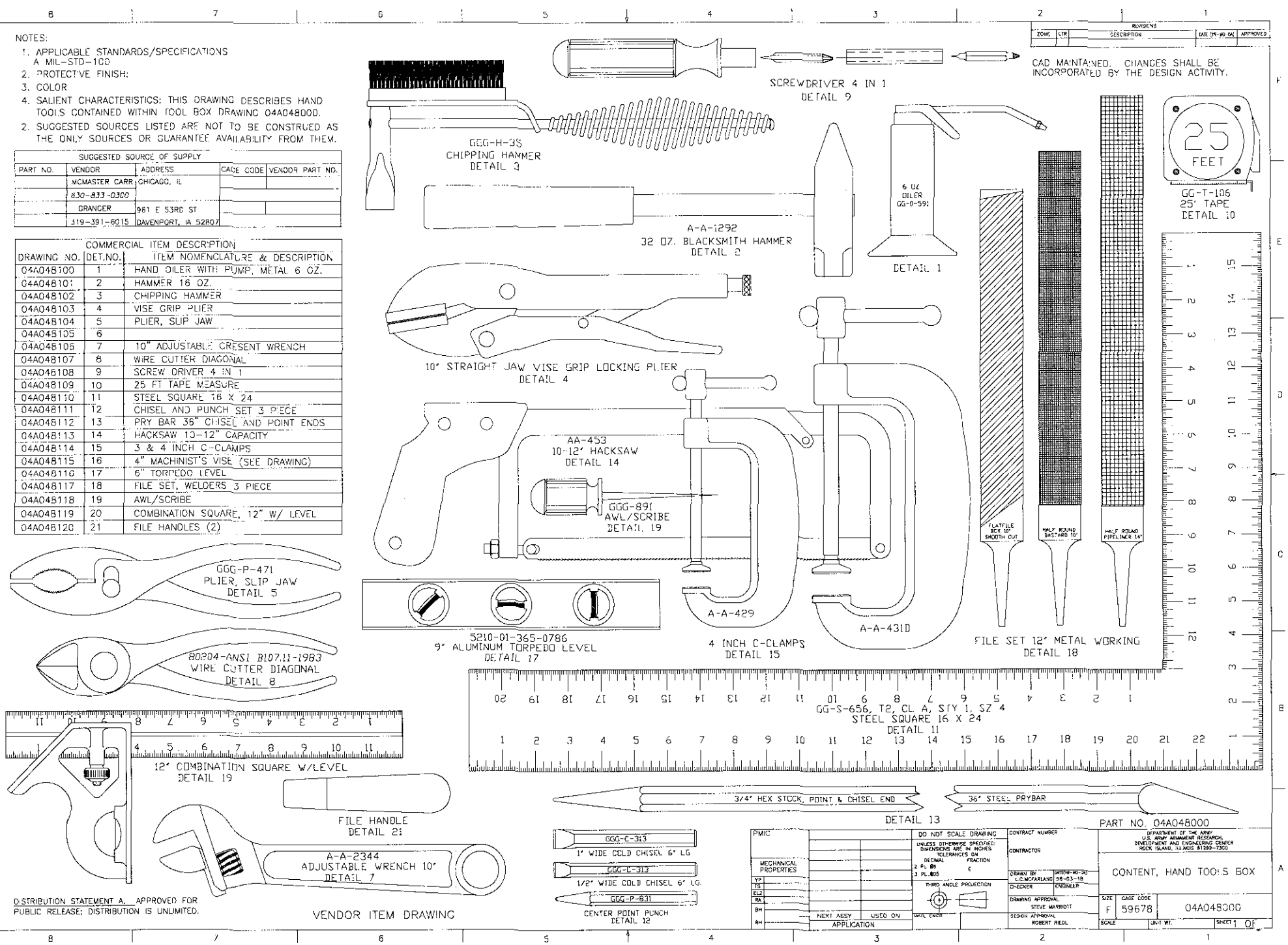

VENDOR ITEM DRAWING

DISTRIBUTION STATEMENT A. APPROVED FOR PUBLIC RELEASE; DISTRIBUTION IS UNLIMITED.

REVISIONS				
ZONE	LTR	DESCRIPTION	DATE (YR-MO-DA)	APPROVED

CAD MAINTAINED. CHANGES SHALL BE INCORPORATED BY THE DESIGN ACTIVITY.

PART NO. 04A048000

PMIC

MECHANICAL PROPERTIES: YP, TS, EL2, RA, BH, RH

NEXT ASSY | USED ON

APPLICATION

DO NOT SCALE DRAWING

UNLESS OTHERWISE SPECIFIED: DIMENSIONS ARE IN INCHES. TOLERANCES ON DECIMAL 2 PL ±.05, 3 PL ±.005, FRACTION ±

THIRD ANGLE PROJECTION

MATL ENGR

CONTRACT NUMBER

CONTRACTOR

DRAWN BY L.C.MCFARLANE | DATE(YR-MO-DA) 96-03-18

CHECKER | ENGINEER

DRAWING APPROVAL STEVE MARRIOTT

DESIGN APPROVAL ROBERT RIEDL

DEPARTMENT OF THE ARMY
U.S. ARMY ARMAMENT RESEARCH, DEVELOPMENT AND ENGINEERING CENTER
ROCK ISLAND, ILLINOIS 61299-7300

CONTENT, HAND TOOLS BOX

SIZE F | CAGE CODE 59678 | 04A048000

SCALE | UNIT WT. | SHEET 1 OF

REVISIONS				
ZONE	LTR	DESCRIPTION	DATE (YR-MO-DA)	APPROVED

CAD MAINTAINED. CHANGES SHALL BE INCORPORATED BY THE DESIGN ACTIVITY.

NOTES:

1. APPLICABLE STANDARDS/SPECIFICATIONS
   A MIL-STD-100
   B ANSI Y14.5M-1982
2. MATERIAL: ALUMINUM ALLOY PLATE & GRADE 5 BOLTS.
   DETAIL 1, (1) 6061 ALUMINUM .25 X 13 X 30 LG
   DETAIL 2, (4) BOLTS, 5/16" X 2" LG, DOUBLE NUT, WASHER & LOCK NUT
   DETAIL 3, (4) BOLT, 3/8" X 5-1/2" LG, WASHERS AND LOCK NUT
   DETAIL 4, (2) GUSSET STRAPS, .12" X 1-1/2" X 6" LG.
   DETAIL 5, (2) CHANNEL RISER, .25" X 1" DP X 4-1/2" H. X 6" LG.
3. WELD GUSSET BETWEEN SIDE AND MID-BASE EA SIDE & LOCATE 3/8" BOLT THRU TRANSVERSE TRAILER MEMBERS.

COMMERCIAL ITEM DESCRIPTION (CID)

NOMENCLATURE: COMPRESSOR, ROTARY, ELECTRIC DRIVEN
MANUFACTURER: COMPAIR KELLOGG HYDROVANE COMPRESSOR
MANUFACTURED IN INDEPENDENCE, VA.
TELEPHONE: (352) 732-2268 Compair - Ocala, Florida
(847) 726-1041 FAX (847) 726-0142 Sydney, Ohio
PERFORMANCE SPECIFICATIONS: .....85 PSI @ 6.0 SCFM
ELECTRIC MOTOR HORSEPOWER: 2.0
NOISE LEVEL @ 1 METER dBA: 65
RECEIVER CAPACITY (GALLONS) ..... (NONE)
SPEED OF ROTATION REV/MIN 1750
OIL CAPACITY (PINTS) 1.4
AIR OUTLET FEMALE .....3/8 BSP
MAXIMUM PERMITTED AMBIENT TEMP .....104 DEG F.
WEIGHT WITH NO MOUNT .....130 LBS

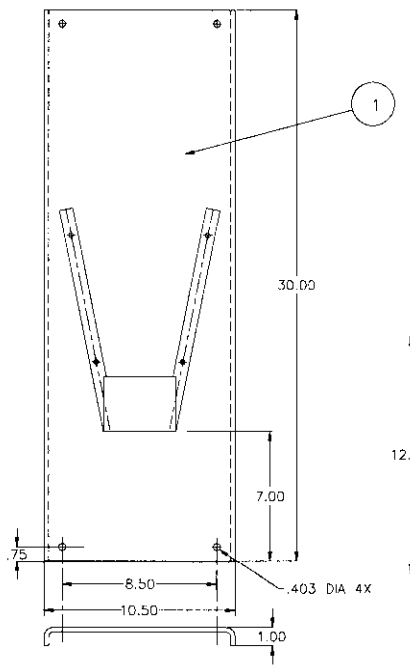

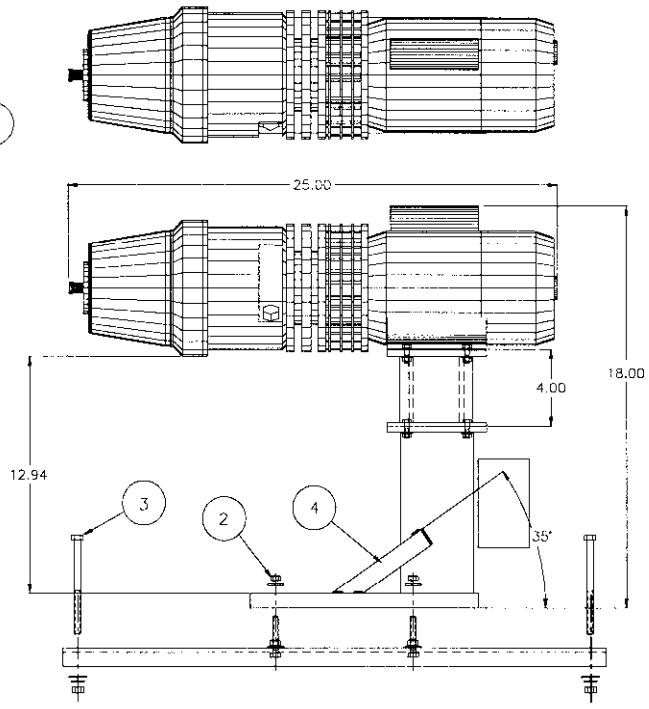

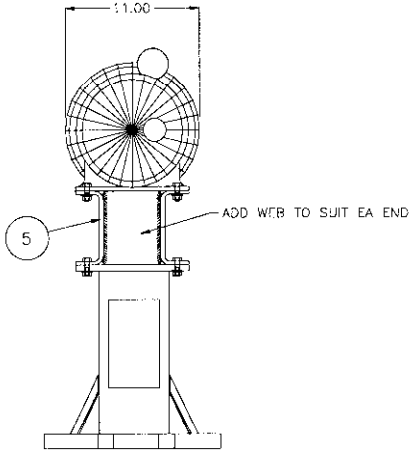

PART NO. 04A049500

DISTRIBUTION STATEMENT A.
APPROVED FOR PUBLIC RELEASE;
DISTRIBUTION IS UNLIMITED.

PMIC		DO NOT SCALE DRAWING	CONTRACT NUMBER
MECHANICAL PROPERTIES		UNLESS OTHERWISE SPECIFIED: DIMENSIONS ARE IN INCHES TOLERANCES ON DECIMAL FRACTION 2 PL .05 3 PL .005	CONTRACTOR
YP		THIRD ANGLE PROJECTION	DRAWN BY L.C. MCFARLAND / DATE(YR-MO-DA) 97-07-29
TS			CHECKER / ENGINEER
EL2			
RA			DRAWING APPROVAL STEVE MARRIOTT
BH	04A044004 / TMWSS	MATL ENGR	
RH	NEXT ASSY / USED ON		DESIGN APPROVAL BOB RIEDL
	APPLICATION		

DEPARTMENT OF THE ARMY
U.S. ARMY ARMAMENT RESEARCH, DEVELOPMENT AND ENGINEERING CENTER
ROCK ISLAND, ILLINOIS 61299-7300

AIR COMPRESSOR & MOUNT DETAIL

SIZE	CAGE CODE	
C	59678	04A049500
SCALE DO NOT	UNIT WT.	SHEET

APPLICATION	
NEXT ASSY	USED ON

REVISIONS			
LTR	DESCRIPTION	DATE	APPROVED

CAD MAINTAINED. CHANGES SHALL BE INCORPORATED BY THE DESIGN ACTIVITY.

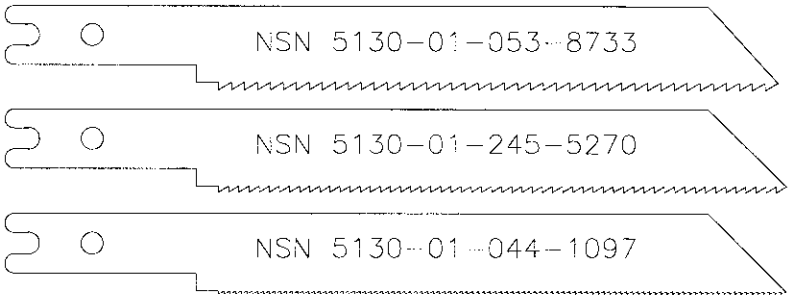

NOTES:

1. APPLICABLE STANDARDS/SPECIFICATION
   A- MIL-STD-100E
   B-A-A-3089
2. MATERIAL: STEEL
3. PROTECTIVE FINISH: NONE
4. COLOR: NONE
5. SALIENT CHARACTERISTICS
   A. PURPOSE: METAL CUTTING, RECIPROCATING, SAW BLADES.
   B. LENGTH: 6 INCHES BY .035 THK.
   C. TEETH PER INCH: 24, 18 & 14.
   D. QUANTITIES: 3 PACKAGES OF 5 BLADES EACH TYPE.
   E. MUST ACCEPT ATTACHMENT & USE WITH POWER SAW (48201).
6. SUGGESTED SOURCE(S) LISTED ON A VENDOR ITEM DRAWING ARE NOT INTENDED TO REPRESENT THE ONLY SOURCE(S) FOR THE ITEM.
7. IDENTIFICATION OF THE SUGGESTED SOURCE(S) OF SUPPLY HEREON IS NOT TO BE CONSTRUED AS A GUARANTEE OF PRESENT OR CONTINUED AVAILABILITY AS A SOURCE OF SUPPLY FOR THE ITEM(S).

SUGGESTED SOURCE OF SUPPLY				
PART NO.	VENDOR	ADDRESS	CAGE CODE	VENDOR PART NO.
XX	MCMASTER CARR	CHICAGO, IL	ZZ	
		1-630-833-0300		
	GRANGER	DAVENPORT, IA		
		1-319-391-6015		

DISTRIBUTION STATEMENT A. APPROVED FOR PUBLIC RELEASE; DISTRIBUTION IS UNLIMITED.

VENDOR ITEM DRAWING

PART NO. 04A048808

PMIC	CONTRACT NUMBER	DEPARTMENT OF THE ARMY U.S. ARMY ARMAMENT RESEARCH, DEVELOPMENT AND ENGINEERING CENTER ROCK ISLAND, ILLINOIS 61299-7300
UNLESS OTHERWISE SPECIFIED: DIMENSIONS ARE IN INCHES TOLERANCES ON 2 PLACE 3 PLACE	CONTRACTOR	SAW BLADES, RECIP
	DRAWN BY L.C.MCFARLAND / DATE 98-04-10	
	CHECKER / ENGINEER	
	DRAWING APPROVAL STEVE MARRIOTT	SIZE A / CAGE CODE 59678 / 04A048808
MATL ENGR	DESIGN APPROVAL BOB RIEDL	SCALE / UNIT WT / SHEET

APPLICATION	
NEXT ASSY	USED ON

REVISIONS			
LTR	DESCRIPTION	DATE	APPROVED

CAD MAINTAINED. CHANGES SHALL BE INCORPORATED BY THE DESIGN ACTIVITY.

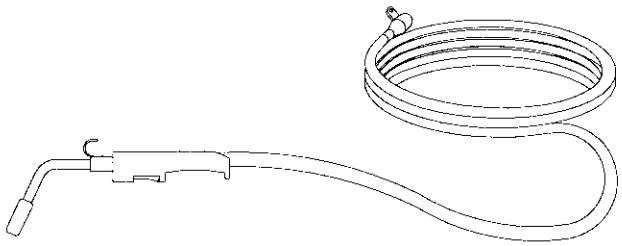

NOTES:

1. APPLICABLE STANDARDS/SPECIFICATION
   A– MIL–STD–100E
2. MATERIAL– OPTIONAL
3. PROTECTIVE FINISH– OPTIONAL
4. COLOR– OPTIONAL
5. SALIENT CHARACTERISTICS
   A– CAPACITY: NOT LESS THAN 250 AMPERES, 100% DUTY CYCLE, AIR COOLED
   B– 10' COAXIAL POWER CABLE, GAS PATH AND WIRE LINER FOR ALUMINUM.
   C– FURNISHED WITH: MANUAL TRIGGER CONTROL FOR GAS, AND WIRE FEED.
6. TO BE USED WITH WIRE FEEDER, DWG 04A048701.
7. THE GUN SHALL INCLUDE 2 EACH SPARE TIPS AT .045 & .078 DIA.
8. SUGGESTED SOURCE(S) LISTED ON A VENDOR ITEM DRAWING ARE NOT INTENDED TO REPRESENT THE ONLY SOURCE(S) FOR THE ITEM.
9. THE IMAGE PROVIDED IS NOT INTENDED TO BE RESTRICTIVE. FEATURES NOT SHOWN MAY VARY.
10. IDENTIFICATION OF THE SUGGESTED SOURCE(S) OF SUPPLY HEREON IS NOT TO BE CONSTRUED AS A GUARANTEE OF PRESENT OR CONTINUED AVAILABILITY AS A SOURCE OF SUPPLY FOR THE ITEM(S).

SUGGESTED SOURCE OF SUPPLY				
PART NO.	VENDOR	ADDRESS	CAGE CODE	VENDOR PART NO.
	GENEX	903–2nd Ave		K471–1
		Rock Island, IL		W/ # K466 1
	S.J. SMITH	3707 W RIVER DRIVE		K471–1
		DAVENPORT, IA		W/ # K466–1

DISTRIBUTION STATEMENT A. APPROVED FOR PUBLIC RELEASE; DISTRIBUTION IS UNLIMITED.

VENDOR ITEM DRAWING

PART NO. 04A08702

PMIC	CONTRACT NUMBER	DEPARTMENT OF THE ARMY U.S. ARMY ARMAMENT RESEARCH, DEVELOPMENT AND ENGINEERING CENTER ROCK ISLAND, ILLINOIS 61299–7300
UNLESS OTHERWISE SPECIFIED: DIMENSIONS ARE IN INCHES TOLERANCES ON 2 PLACE 3 PLACE	CONTRACTOR	MIG GUN ALUMINUM
	DRAWN BY L.C.MCFARLAND / DATE 98–04–10	
	CHECKER / ENGINEER	
	DRAWING APPROVAL STEVE MARRIOTT	SIZE A / CAGE CODE 59678 / 04A048702
MATL ENGR	DESIGN APPROVAL BOB RIEDL	SCALE / UNIT WT / SHEET

Attach 021