REVISIONS				
ZONE	LTR	DESCRIPTION	DATE (YR-MO-DA)	APPROVED
	H	REDRAWN WITHOUT CHANGE WAS "C" SIZE NOR D9T4025H (CDA9P505)	90-06-21	JMM WST

NOTES:

1. MATERIAL:
   ALUMINUM ALLOY INVESTMENT CASTING
   356-T6 PER SPEC ASTM B-618, A13560.
   ALTERNATE MATERIAL:
   ALUMINUM ALLOY BAR OR ROD, 6061-T6 OR
   T651 PER QQ-A-225/8 OR ASTM B211.
2. UNLESS OTHERWISE SPECIFIED:
   CAST EDGES .015 R
   CAST FILLETS .015 R
   NO DRAFT ANGLE PERMITTED
3. REMOVE ALL BURRS AND SHARP EDGES .010 MAX.
4. ANODIZE PER SPEC MIL-A-8625
   TYPE II, CLASS 2, DYED BLACK.
5. APPLY PER MIL-STD-130 (DO NOT MARK PART):
   19207-12283290.

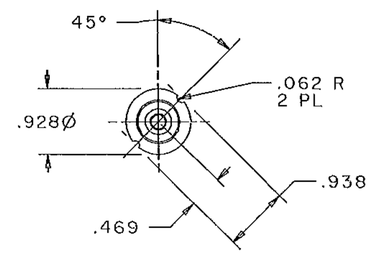

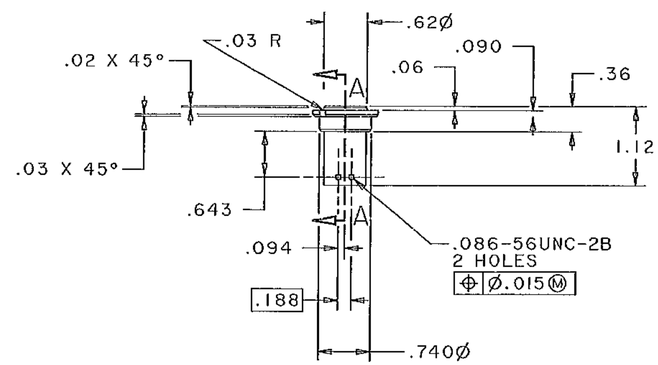

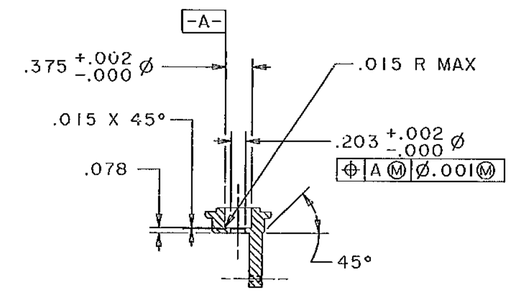

SECTION A-A

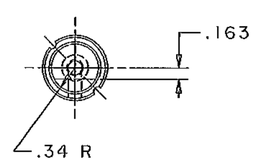

CURRENT DESIGN ACTIVITY CAGE CODE 19200
U.S. ARMY
ARMAMENT RESEARCH, DEVELOPMENT AND ENGINEERING CENTER
PICATINNY ARSENAL, NEW JERSEY 07806-5000

INTERPRET DRAWING IN ACCORDANCE WITH STANDARDS PRESCRIBED BY MIL-STD-100

GEOMETRIC CHARACTERISTIC SYMBOLS (AS PER ANSI Y14.5-1973)

— STRAIGHT	◎ CONCENTRICITY	⌭ CYLINDRICAL	⌖ TRUE POSITION
// PARALLEL	∠ ANGULARITY	○ ROUNDNESS	Ø DIAMETER
▱ FLATNESS	⌯ SYMMETRICAL	⊥ SQUARENESS	XXX BASIC
↗ CIRC CIRCULAR RUNOUT		↗ TOTAL TOTAL RUNOUT	
Ⓜ MAXIMUM MATERIAL CONDITION (MMC)		⌓ PROFILE OF A SURFACE	
Ⓢ REGARDLESS OF FEATURE SIZE (RFS)		⌒ PROFILE OF A LINE	
Ⓟ PROJECTED TOLERANCE ZONE			

TACOM-D1-88

MECHANICAL PROPERTIES	
YP	
TS	
EL2	
RA	
BH	
RH	

PMIC —

NEXT ASSY	USED ON
12283226	MI

APPLICATION

UNLESS OTHERWISE SPECIFIED DIMENSIONS ARE IN INCHES
TOLERANCES ON
2 PLACES ± .01 3 PLACES ± .005 ANGLES ± 2°

DFTG SUPV —
PRODUCIBILITY ENGRG —
MFG ENGRG —
LOG. ENGRG —
MATL ENGRG J.S.KIRBY

CONTRACT NUMBER DAAE07-89-C-R081
CONTRACTOR GENERAL DYNAMICS Land Systems Division
DRAWN BY J.B. DATE (YR-MO-DA) 78-09-15
CHECKER E.S.
ENGINEER J.S.KIRBY
DRAWING APPROVAL-GOVT C.W.Z. MEL YERT
DESIGN APPROVAL-GOVT T.J.O. R.M.WALSH

PART No. 12283290

DESIGN ACTIVITY
U.S. ARMY TANK-AUTOMOTIVE COMMAND
WARREN, MICHIGAN 48397-5000

HOLDER, SWITCH

SIZE	CAGE CODE	
D	19207	12283290

SCALE 1/1 UNIT WT — SHEET —

COMPUTER REPRODUCIBLE
B.CGT.MIA1.12283290.H-.18.HOLDER

12283290