APPLICATION		REVISIONS			
NEXT ASSY	USED ON	SYM	DESCRIPTION	DATE	APPROVAL
12725086	GUFS	—	PRODUCT BASELINE ERR D8I2003 88-05-09	89-1006	# LCY
		A	NOR D5I3033 950922	960311	TPT

NOTES: "REQUIREMENTS"

1. BATTERY LITHIUM THIONYL CHLORIDE
   - A. OPEN CIRCUIT VOLTAGE 3.65 DCV
   - B. WORKING VOLTAGE 3.5 DCV
   - C. CAPACITY @ 350 HR RATE 750 MAH
   - D. WEIGHT 6.8 GRAMS
   - E. HERMETICALLY SEALED STAINLESS STEEL CASE
   - F. OPERATING TEMP RANGE -40°C TO 110°C
   - G. POLARITY KEYED
   - H. WAVE SOLDERABLE
2. ONLY THE ITEM DESCRIBED ON THIS DRAWING WHEN PROCURED FROM THE VENDOR LISTED HEREON IS APPROVED BY ARDEC FOR USE IN THE APPLICATION SPECIFIED HEREON. A SUBSTITUTE ITEM SHALL NOT BE USED WITHOUT PRIOR APPROVAL BY ARDEC.
3. IDENTIFICATION OF THE APPROVED SOURCE HEREON IS NOT TO BE CONSTRUED AS A GUARANTEE OF PRESENT OR CONTINUED AVAILABILITY AS A SOURCE OF SUPPLY FOR THE ITEM DESCRIBED ON THIS DRAWING.
4. APPROVED SOURCE(S) OF SUPPLY:

   EAGLE-PICHER INDUSTRIES, INC., ELECTRONICS DIVISION
   "C" & PORTER STS
   P.O. BOX 47
   JOPLIN, MO. 64802
   VENDOR PART NUMBER: LTC-7P
   FSCM NUMBER: 91558
   ALT. P/N LTC-7PN

A	—	A
SH 3	SH 2	SH 1
REV STATUS OF SHEETS		

SOURCE CONTROL DRAWING

PART NO. 12599320

ORIGINAL DATE OF DRAWING		U.S. ARMY ARMAMENT RESEARCH AND DEVELOPMENT CENTER DOVER, NEW JERSEY 07801		
89-02-14				
DRAFTSMAN JNG	CHECKER JNG	BATTERY, LITHIUM THIONYL CHLORIDE 3.5 VDC		
ENGR JNG	ENGR			
ENGR	ENGR			
Leon Ostopowicz Douglas M Laird		SIZE A	CURRENT CAGE CODE 19200	12599320
		SCALE	UNIT WT	SHEET 1 OF 3

ARRADCOM FORM 68 JUN 78 REPLACES DARPA FORM 1036 OCT 75 WHICH IS OBSOLETE

APPLICATION		REVISIONS			
NEXT ASSY	USED ON	SYM	DESCRIPTION	DATE	APPROVAL
		—	PRODUCT BASELINE ERR D8I2003 88-05-09	89-10-06	[signature]

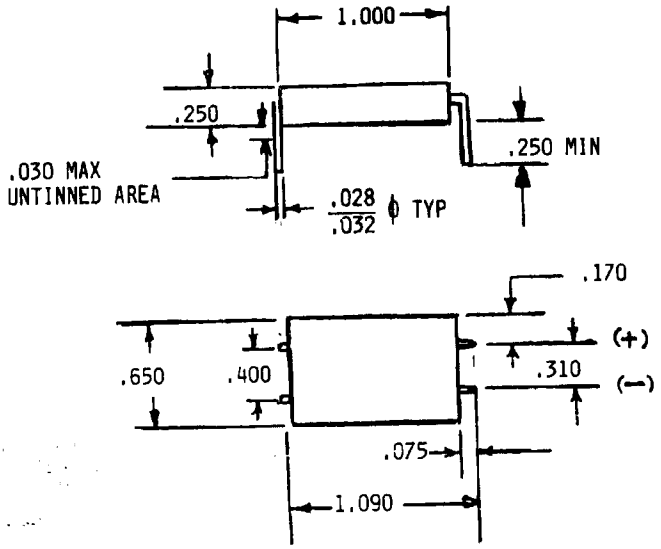

PART NO.

ORIGINAL DATE OF DRAWING 89-02-14		U S ARMY ARMAMENT RESEARCH AND DEVELOPMENT CENTER DOVER, NEW JERSEY 07801
DRAFTSMAN JNG	CHECKER JNG	BATTERY, LITHIUM THIONYL CHLORIDE 3.5 VDC
ENGR JNG	ENGR	
ENGR	ENGR	
Leon Ostopowicz		SIZE A · CURRENT CAGE CODE 19200 · 12599320
Douglas M. Laird		SCALE · UNIT WT · SHEET 2 OF 3

ARRADCOM FORM 68 JUN 78 REPLACES SARPA FORM 1038 OCT 75 WHICH IS OBSOLETE

APPLICATION		REVISIONS			
NEXT ASSY	USED ON	SYM	DESCRIPTION	DATE	APPROVAL
		—	PRODUCT BASELINE ERR D8I2003 88-05-09	89-10-06	LPV
		A	NOR D5I3033 950922	960311	TPT

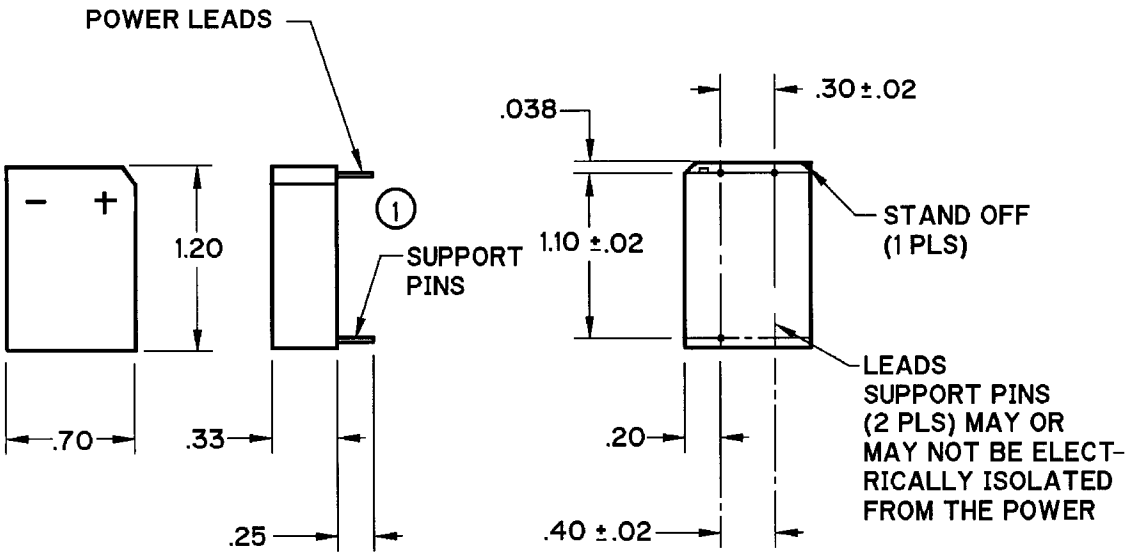

NOTE:
1 - ALTERNATE: EAGLE-PICHER P/N LTC-7PN

2-OUTER CASE SHALL BE POTTED WITH A SUFFICIENT AMOUNT OF POTTING TO HOLD THE CELLS WITHIN THE CASE. THE STAINLES STEEL CELL CASES WILL NOT BE COVERED.

PART NO. 12599320

ORIGINAL DATE OF DRAWING 89-02-14	U.S.ARMY ARMAMENT RESEARCH AND DEVELOPMENT CENTER DOVER, NEW JERSEY 07801
DRAFTSMAN JNG / CHECKER JNG	BATTERY, LITHIUM THIONYL CHLORIDE 3.5 VDC
ENGR JNG / ENGR	
ENGR / ENGR	
Leon Montgomery Douglas M Laird	SIZE A · CURRENT CAGE CODE 19200 · 12599320
	SCALE · UNIT WT · SHEET 3 OF 3

ARRADCOM FORM 65 JUN 78 REPLACES SARPA FORM 1038 OCT 75 WHICH IS OBSOLETE

PARTS LIST (MIL-STD-1174)

US ARMY ARMAMENT RESEARCH AND DEVELOPMENT COMMAND
DOVER, NEW JERSEY 07801

FSCM NO.	1 ORIG. DATE	2
NO. 19200	84-6-24	PL 12725015-1

3 LIST TITLE: CONTROL PANEL ASSEMBLY

4 AUTHENTICATION: J. BEDARD

5 SHEET 1 OF 1 SHEETS

6 DWG. NO. 12725015

7 FIND NO.	8 QTY. REQ.	9 FSCM	10 PART OR IDENTIFYING NO.	DRAWING/DOCUMENT 11 SIZE	DRAWING/DOCUMENT 12 NUMBER	13 NOMENCLATURE OR DESCRIPTION	14 SUP. LIST	15 NOTES
1	1	19200	12725016-1	D	12725016	HOUSING, COVER		
2	1	96906	MS24659-23	A	MS24659	SWITCH, TOGGLE		
3	1	19200	12725090	B	12725090	RECEPTACLE ASSEMBLY, INPUT		
4	1	19200	12725021	B	12725021	RECEPTACLE ASSEMBLY, OUTPUT		
5	8	96906	MS35206-216	A	MS35206	SCREW, 4-40		
6	8	96906	MS27183-4	A	MS27183	WASHER, FLAT #4		
7	8	96906	MS35338-40	A	MS35338	WASHER, LOCK #4		
8	1	19200	12725040-1	B	12725040	CAP AND RETAINER ASSY.		
9	1	19200	12725040-2	B	12725040	CAP AND RETAINER ASSY.		
10						DELETED		
11	1	96906	MS52000-7	A	MS52000	GASKET RUBBER		
12	1	96906	MS52000-5	A	MS52000	GASKET RUBBER		
13						DELETED		
14	1	96906	MS-35206-226	A	MS 35206	SCREW, 6-32		
15	1	96906	MS-35338-41	A	MS 35338	WASHER, LOCK #6		
16	1	96906	MS-27183-5	A	MS 27183	WASHER, FLAT #6		
17	1	96906	MS51607	A	MS51607	VALVE STEM		
18	1	96906	MS20813-1	A	MS20813	CAP, PNEUMATIC VALVE		
19	1	19200	10516567	D	10516567	STRAP		
20	1		MS423/16-001		MIL-B-5423	BOOT, DUST AND WATERSEAL		
21	AR		MS7730-51		MS7730	TAPE, ANTISEIZE, POLYETRAFLUROETHYLENE		
22	1		MS52000-5		MS52000	GASKET		
23	1		MS52000-7		MS52000	GASKET		

16 REV.	DATE	AUTH.	APPR.	16 REV.	DATE	AUTH.	APPR.
-	850220	ERR F5X5002	-----			(ECP F6I0021 86-10-24)	
A	881026	NOR F6I2008 86-08-13	F. Bowden	D	89-09-28	INC NOR D8I2003 88-05-09	
B	89-04-24	INC NOR F5I2003 -009 86-02-18				(ECP D8I2055 88-10-18)	
C	89-07-17	INC NOR F6I0012 86-07-22				(ECP D8I2001 88-05-09)	

12725014	DVC 17-133
17 NEXT ASSY.	18 USED ON
APPLICATION	

ORIGINAL

REVISIONS			
ITEM	DESCRIPTION	DATE	APPROVAL
	ECR F5A5002	890220	—
A	NOR F5I2009 850913	880510	
B	INC NOR F6I2011 86-10-31	880926	
C	INC NOR F5I2003 85-02-18	89-03-13	
D	INC NOR 08I2003 88-05-09 (ECP 08I2001 88-05-09) (ECP 08I2055 88-10-18)	89-10-03	
E	INC NOR 00I2070 90-12-20	91-03-29	

NOTES:-

1- SPEC MIL-F-13926 APPLIES.

2- ASSEMBLE JUMPER WIRE BY CRIMPING LUG, MS25036-102 TO STRIP ENDS OF WIRE, M16878/4BFBO.

3- ASSEMBLE GASKET RUBBER MS52000-5 TO RECEPTACLE INPUT ASSEMBLY 12725090. INSTALL CAP AND RETAINER 12725040-1 ON CONNECTOR AND INSTALL ASSEMBLY INTO HOUSING COVER, 12725016-1 USING HARDWARE INDICATED.

4- WIRE SWITCH MS24659-23D USING ASSEMBLED (NOTE 2) AND INDICATED TERMINAL LUGS FROM RECEPTACLE, INPUT ASSEMBLY (12725090) HARNESS PER WIRING DIAGRAM SECTION A-A. JUMPER WIRED BETWEEN TERMINALS 1 AND 5 OF SWITCH. LUGS ARE MARKED TO PERMIT INSTALLATION TO CORRESPONDING SWITCH TERMINALS.

5- INSTALL BOOT MIL-B-5423 TO SWITCH BUSHING. INSTALL SWITCH INTO HOUSING FROM INTERIOR AND SECURE WITH ATTACHING HARDWARE.

6- WRAP VALVE ASSY MS51607 WITH TAPE MIL-T-2773C, SIZE I.

7- INSTALL STRAP 10516567 TO CAP MS20813-1.

8- ASSEMBLE STRAP 10516567 OPPOSITE END TO VALVE ASSY MS51607 AND INSTALL ASSEMBLY INTO HOUSING 12725016-1.

9- ASSEMBLE GASKET RUBBER MS52000-7 TO RECEPTACLE OUTPUT ASSEMBLY 12725021. INSTALL CAP AND RETAINER 12725040-2 ON CONNECTOR AND INSTALL ASSEMBLY INTO HOUSING COVER, 12725016-1, USING HARDWARE INDICATED.

10- SECURE TERMINAL LUG T4 TO HOUSING COVER 12725016-1 USING HARDWARE INDICATED.

11- CHECK ELECTRICAL CONTINUITY PER MS24659-24D SWITCH IN SECTION A-A.

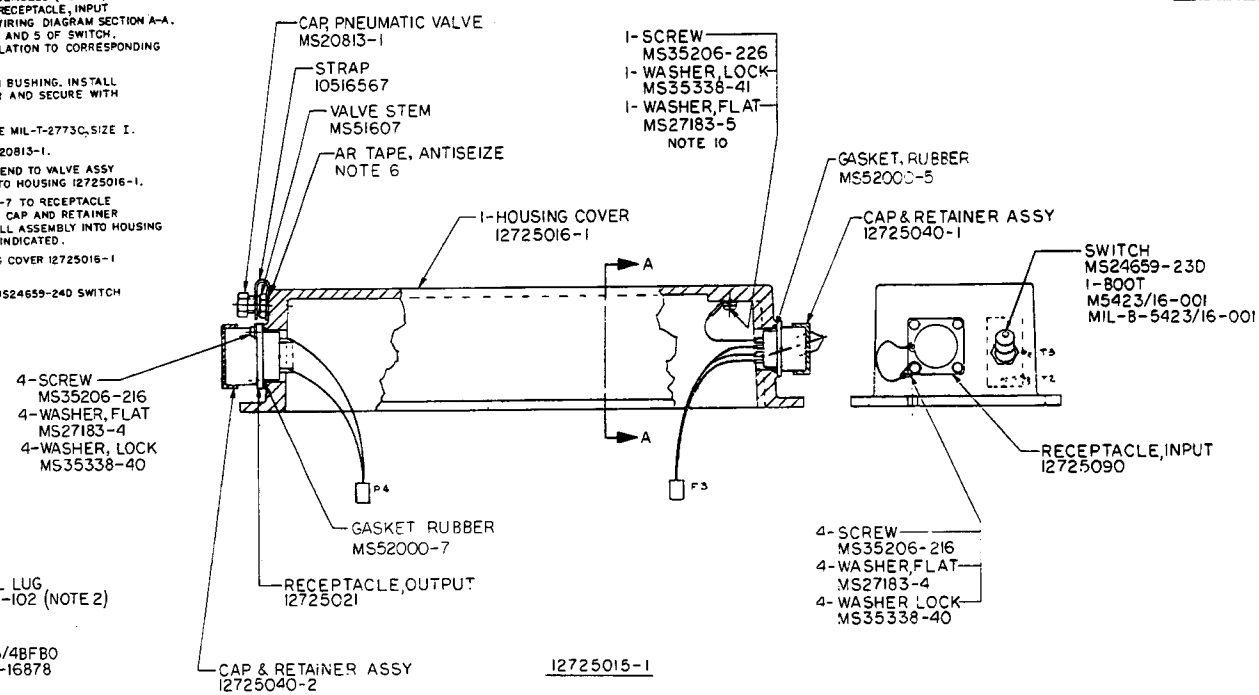

12725015-1

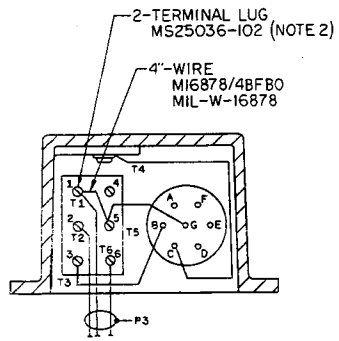

SECTION A-A
WIRING DIAGRAM

TABLE		NEXT ASSEMBLY
12725015	OBSOLETE DESIGN-NO CONFIGURATION SHOWN	12725014
12725015-1	FOR NEW PROCUREMENT CONFIGURATION AS SHOWN;	12725014-1

SEE SEPARATE PARTS LIST: SEE TABLE

PART NO. SEE TABLE

DO NOT SCALE DRAWING

THIRD ANGLE PROJECTION

ORIGINAL DATE OF DRAWING 84-07-05

U.S. ARMY ARMAMENT RESEARCH AND DEVELOPMENT CENTER
DOVER, NEW JERSEY 07801

CONTROL PANEL ASSEMBLY

SIZE F | CAGE CODE 19200 | 12725015

SCALE 1/1 | UNIT WT. | SHEET

SEE TABLE | GUES
NEXT ASSY | USED ON
APPLICATION

DRAWING SIZE D (ARRADCOMR 70-12)

NOTES:-

1-SPEC MIL-F-13926 AND ANSI Y14.5-1973 AND QAP12725021 APPLIES.

2-STRIP AND TIN ONE END OF WIRES.

3-SOLDER WIRE TO CONNECTOR,RECEPTACLE IN ACCORDANCE WITH DRAWING 11785556, NOTE 1 USING SOLDER,SN60WRP2 PER QQ-S-571 AND INSTALL TUBING.

4-INSTALL CONNECTOR (P4) TO INDIVIDUAL LEADS IN ACCORDANCE WITH TABULAR WIRING DATA.

5-SPOT TIE LEADS OR OTHERWISE SECURE LEADS.

REVISIONS			
SYM	DESCRIPTION	DATE	APPROVAL
—	ERR F5X5002	850220	—
A	INC NOR F6I2011 86-10-31	880926	[signature]
B	INC NOR F6I0012 86-07-22 (ECP F6I0021 86-10-24)	89-07-14	[signature]
C	INC NOR D8I2003 88-05-09 (ECP D8I2054 88-10-18)	89-10-02	[signature]
D	INC NOR D0I2066 90-12-20	91-02-27	[signature]
E	INC NOR D1I2002 90-05-13 (ECP D1I2024 91-10-29)	92-07-07	[signature]
F	INC NOR D1I2001 91-04-16 (ECP D2I3017 92-05-08)	93-01-13	[signature]
G	NOR H7I3015/970919	971017	DR

PARTS LIST

QTY	PART NO.	DRAWING NO.	NOMENCLATURE
1	11784667	11784667	CONNECTOR, RECEPTACLE
A/R	M23053/5-103-0	MIL-I-23053	TUBING, INSULATED
1	12725012-2	12725012	CONNECTOR, PLUG
A/R	SN60WRP2	QQ-S-571	SOLDER
A/R	M23053/5-105-0	MIL-I-23053	TUBING, INSULATED
A/R	M16878/4BF3B	MIL-W-16878	WIRE, ELECTRICAL
A/R	M16878/4BFB6	MIL-W-16878	WIRE, ELECTRICAL
A/R	M16878/4BFB9	MIL-W-16878	WIRE, ELECTRICAL
A/R	M16878/4BFB0	MIL-W-16878	WIRE, ELECTRICAL
1	12725042-2	12725042	CONNECTOR

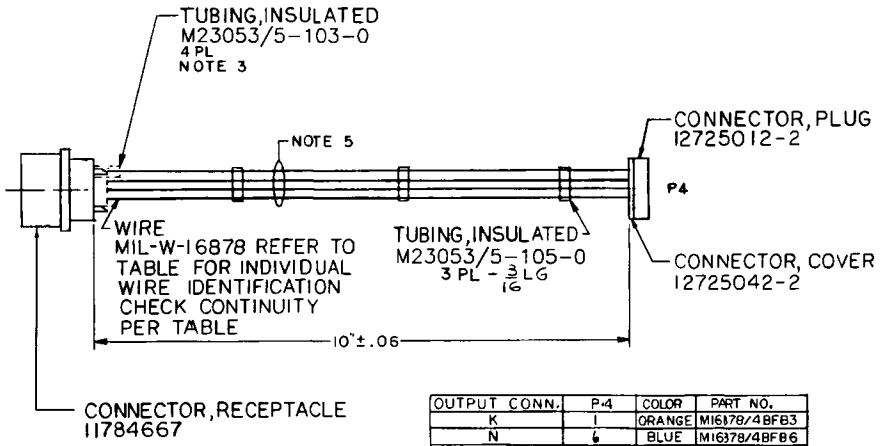

OUTPUT CONN.	P4	COLOR	PART NO.
K	1	ORANGE	M16878/4BFB3
N	6	BLUE	M16378/4BFB6
I	5	WHITE	M16378/4BFB9
A	4	BLACK	M16378/4BFBØ
–			
–			

PART NO. 12725021

12725026	GUFS	MECHANICAL PROPERTIES	DO NOT SCALE DRAWING	ORIGINAL DATE OF DRAWING 84-07-05	U S ARMY ARMAMENT RESEARCH AND DEVELOPMENT COMMAND DOVER, NEW JERSEY 07801
NEXT ASSY	USED ON	YP / TS / EL2 / RA / RH / RH	UNLESS OTHERWISE SPECIFIED DIMENSIONS ARE IN INCHES	DRAFTSMAN J.McDONALD / CHECKER [signature]	RECEPTACLE ASSEMBLY OUTPUT
APPLICATION			TOLERANCES ON DECIMALS ± — FRACTIONS ± — ANGLES ± —	ENGR [signature] / ENGR HS	SIZE D / CODE IDENT NO. 19200 / 12725021
				[signature] / John Bedard	SCALE 1/1 / UNIT WT. / SHEET

DISTRIBUTION STATEMENT A.
APPROVED FOR PUBLIC RELEASE;
DISTRIBUTION IS UNLIMITED.

ARRADCOM FORM 68 AUG 77 REPLACES SARPA FORM 1021 NOV 73 WHICH MAY BE USED WITH EXHAUSTED

DRAWING SIZE B
(ARRADCOMR 70-12)

REVISIONS			
SYM	DESCRIPTION	DATE	APPROVAL
—	ERR F5X5002	850220	—
A	INC NOR F6I0012 86-07-22 (ECP F6I0021 86-10-24)	89-07-13	

NOTES:-

1- REQUIREMENTS:

A- MATERIAL:

a) MOLDED OF 6/6 NYLON (U.L.94V-2); NATURAL COLOR WITH AMG COLOR CODING RIBS.

b) CONTACTS: HIGH PERFORMANCE COPPER ALLOY WITH TIN OVER NICKEL PLATING.

B- VOLTAGE RATING: 300 VAC/VDC MAX.

C- CURRENT RATING: 4.0 AMPS

D- TEMPERATURE RATING: -55° TO 105°C

2- IDENTIFCATION OF THE SUGGESTED SOURCES OF SUPPLY HEREON IS NOT TO BE CONSTRUED AS A GUARANTEE OF PRESENT OR CONTINUED AVAILABILITY AS A SOURCE OF SUPPLY FOR THE ITEM.

3- SUGGESTED SOURCE OF SUPPLY:
PANDUIT CORPORATION
TINLEY PARK, ILLINOIS 60477
VENDOR PART NO. CE100F22-6
FSCM NO. 06383

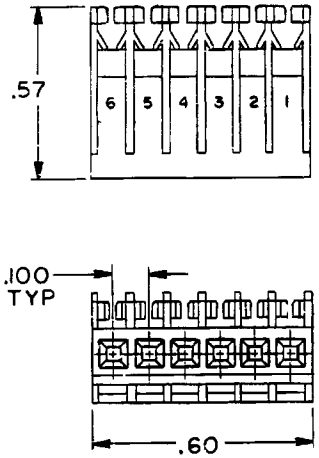

SPECIFICATION CONTROL DRAWING
PART NO. 12725022

		MECHANICAL PROPERTIES	DO NOT SCALE DRAWING	ORIGINAL DATE OF DRAWING	U S ARMY ARMAMENT RESEARCH AND DEVELOPMENT COMMAND, DOVER, NEW JERSEY 07801
		YP	UNLESS OTHERWISE SPECIFIED DIMENSIONS ARE IN INCHES	84-07-05	
		TS	TOLERANCES ON DECIMALS ±.02 .XX ±.005 .XXX	DRAFTSMAN HS / CHECKER	CONNECTOR, PLUG
		EL2	FRACTIONS ± ANGLES ±	ENGR / ENGR	
12725021 / 12725020	GUFS-RETS	RA		ENGR / ENGR	SIZE B · CODE IDENT NO. 19200 · 12725022
NEXT ASSY	USED ON	BH		P Howard Robertson / John Bedard	SCALE — · UNIT WT. · SHEET
APPLICATION		RH			

ARRADCOM FORM 66 AUG 77 REPLACES SARPA FORM 1039 OCT 75 WHICH MAY BE USED UNTIL EXHAUSTED

REVISIONS			
SYM	DESCRIPTION	DATE	APPROVAL
—	ENG RELEASE	850220	—
A	INC NOR F6I2011 86-10-31	860926	
B	INC NOR D6I2003 88-05-09 (ECP D6I2001 88-05-09) (ECP D6I2054 88-1048)	890411	
C	INC NOR D1I2001 91-04-16 (ECP D2I3010 92-03-31)	93-01-05	

NOTES:-

1-SPEC MIL-F-13926 AND ANSI Y14.5 1973 APPLY.

2-CLEAN MATING SURFACES OF ITEM 1 (HOUSING) AND ITEM 2 (FEED THRU) WITH ISOPROPYL ALCOHOL AND ALLOW TO AIR DRY FOR 15 MINUTES.
COAT MATING SURFACES WITH ITEM 3 (ADHESIVE).
PRESS FEED THRU, ITEM 2, INTO SLOTS
SEAL AS SHOWN.

3-INSTALL SCREW, MS3213-32 TO HOUSING 12725023 IN LOCATION SHOWN.

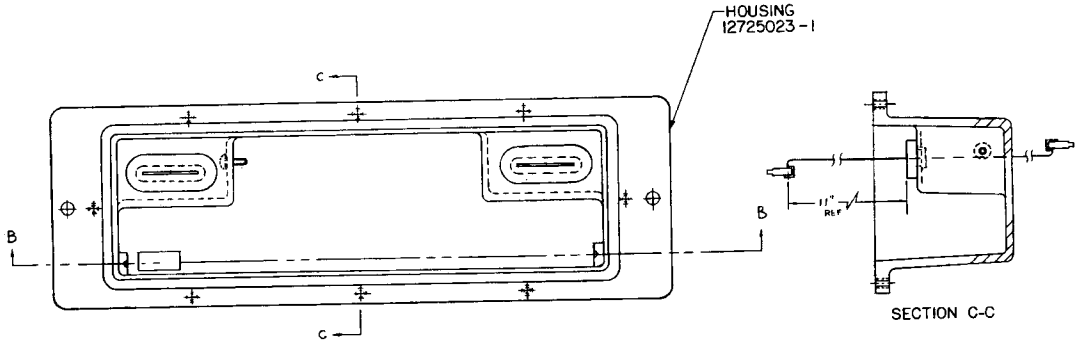

SECTION C-C

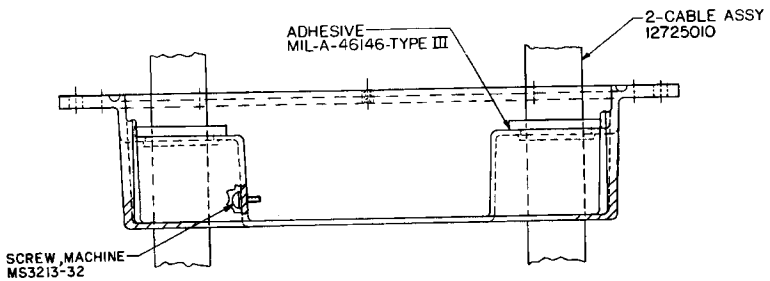

SECTION B-B

12725026-1

TABLE		NEXT ASSEMBLY
12725026	OBSOLETE DESIGN-NO CONFIGURATION SHOWN	12725014
12725026-1	FOR NEW PROCUREMENT CONFIGURATION AS SHOWN	12725014-1

DISTRIBUTION STATEMENT A.
APPROVED FOR PUBLIC RELEASE; DISTRIBUTION IS UNLIMITED

MECHANICAL PROPERTIES

DO NOT SCALE DRAWING
UNLESS OTHERWISE SPECIFIED
DIMENSIONS ARE IN INCHES
TOLERANCES ON DECIMALS ± .030
FRACTIONS ± ___ ANGLES ±
THIRD ANGLE PROJECTION

ORIGINAL DATE OF DRAWING 84-07-05

SEE TABLE
NEXT ASSY | USED ON
APPLICATION

PART NO. SEE TABLE

US ARMY ARMAMENT RESEARCH AND DEVELOPMENT COMMAND
DOVER, NEW JERSEY 07801

HOUSING ASSEMBLY, ELECTRONICS

SIZE F | CODE IDENT NO 19200 | 12725026

SCALE 1/1 | WT | SHEET 1 OF 1

DRAWING SIZE D

REVISIONS				
SYM	DESCRIPTION		DATE	APPROVAL
A	INC NOR D812003 88-05-09 (ECP D812058 88-10-18) (ECP D912010 89-03-28)		89-09-28	
B	NOR D312012	930727	931015	RP

NOTES:

1. QAP 12725028 APPLIES.
2. PERFORMANCE:
   - A. TYPE: HERMETICALLY SEALED, SPDT
   - B. CONTACT MATERIAL: Ag
   - C. CONTACT RATING: 3A RESISTIVE; PULSED AT 150 MILLISEC MAXIMUM DURATION
   - D. OPERATING TEMPERATURE: -32°C TO 65°C
   - E. COIL VOLTAGE: 12 VDC NOMINAL
   - F. MINIMUM PULL-IN VOLTAGE: <10.8 VDC; OVER OPERATING TEMPERATURE RANGE (-32° TO 65°C)
   - G. COIL RESISTANCE: 400 OHM ±10 %
   - H. CONTACT RESISTANCE: 50 MILLIOHM, MAX.
   - J. DIELECTRIC STRENGTH: 500 VAC (50-60 HZ)
   - K. OPERATING TIME: (INCLUDING BOUNCING TIME): 10 MILLISEC, MAX.
   - L. RELEASE TIME: 5 MILLISEC, MAX.
   - M. INSULATION RESISTANCE: 100 MEGOHM AT 500 VDC
   - N. VIBRATION: 10 G (10-55 HZ)
   - P. SHOCK: 10 G
   - R. LIFE (AT RATED LOADS):
     - (1) ELECTRICAL - 1×10^5 OPERATIONS
     - (2) MECHANICAL - 1×10^5 OPERATIONS
     - 1×10^7 OPERATIONS (NO LOAD)
3. ONLY THE ITEM DESCRIBED ON THIS DRAWING IS APPROVED BY ARDEC FOR USE IN THE APPLICATION SPECIFIED HEREON. A SUBSTITUTE ITEM SHALL NOT BE USED WITHOUT PRIOR APPROVAL BY ARDEC.
4. TEST PROCEDURE:
   - A. WITH POWER OFF, PRELOAD TEST FIXTURE BOARDS BY PLUGGING RELAY INTO SOCKETS PROVIDED.
   - B. AT AMBIENT TEMPERATURE AND NOMINAL INPUT VOLTAGE
     1. APPLY POWER (12VDC) TO TEST FIXTURE BOARDS AND CYCLE UNITS AT 3.6 HZ FOR A MINIMUM OF 250 CYCLES PER RELAY. OBSERVE INDICATORS FOR PROPER SWITCHING AND ANY FAILURE INDICATIONS. RECORD FAILED RELAYS AND CONTINUE TEST SEQUENCE.
   - C. HIGH/LOW TEMPERATURE SCREENING-LOW VOLTAGE
     1. PLACE RELAYS INTO TEMPERATURE CHAMBER AND CONDUCT TEMPERATURE SCREENING AT THE MINIMUM VOLTAGE OF 10.8 VDC.
     2. RAISE CHAMBER TEMPERATURE TO 149° F AND ALLOW A MINIMUM OF 60 MINUTES AFTER THE CHAMBER TEMPERATURE IS AT 149° F BEFORE APPLYING POWER TO RELAYS.
     3. TURN TEST CYCLE ON AND CYCLE RELAYS AT .76 HZ FOR A MINIMUM OF 250 CYCLES.
     4. TURN TEST CYCLE OFF.
     5. LOWER TEMPERATURE TO AMBIENT AND ALLOW RELAYS TO STABILIZE FOR A MINIMUM OF 60 MINUTES BEFORE STARTING TEST CYCLE.
     6. REPEAT TEST CYCLE (STEP 5).
     7. TURN TEST CYCLE OFF.
     8. LOWER TEMPERATURE TO -25° F AND ALLOW A MINIMUM OF 60 MINUTES FOR RELAYS TO STABILIZE BEFORE STARTING TEST CYCLE.
     9. REPEAT TEST CYCLE (STEP 5).

NOTES CONT:

4. C. CONT:
   - 10. TURN TEST CYCLE OFF AND ALLOW CHAMBER TO STABILIZE TO AMBIENT AND REMOVE TEST LOT.
   - 11. SEGREGATE ALL UNITS WHICH HAVE A FAILURE INDICATION AS REJECTS.
   - 12. MARK ALL ACCEPTED UNITS WITH P/N 12725028.
5. SUGGESTED SOURCE OF SUPPLY

   TAIWAN ORIGINAL ELECTRIC MFG. CO. LTD.
   NO.210 SHIN MING ROAD, NAI FU
   TAIPEI TAIWAN, R.O.C.
   MFG.P/N OUA-SH-112D

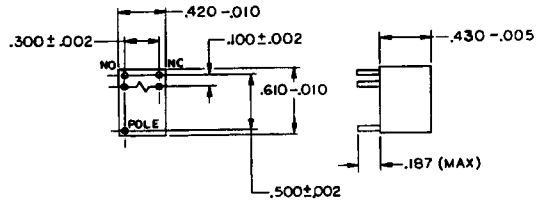

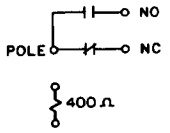

SCHEMATIC

SPECIFICATION CONTROL DRAWING

PART NO. 12725028

12725086	GUFS	DO NOT SCALE DRAWING	ORIGINAL DATE OF DRAWING 84-07-05	U.S. ARMY ARMAMENT RESEARCH, DEVELOPMENT AND ENGINEERING CENTER PICATINNY ARSENAL, NEW JERSEY 07806-5000
NEXT ASSY	USED ON	UNLESS OTHERWISE SPECIFIED DIMENSIONS ARE IN INCHES	DRAFTSMAN J MC DONALD	CHECKER A LAMUN
APPLICATION		TOLERANCES ON DECIMALS ±.005	DESIGNER I GENTILE	CHKR
		FRACTIONS ± ANGLES ±	ENGR G MS	CHKR
		THIRD ANGLE PROJECTION	PM P H ROBERTSON	SIZE D CAGE CODE 19200 — 12725028
			J BEDARD	SCALE 2/1 UNIT WT. SHEET

RELAY OUTPUT

MECHANICAL PROPERTIES: YP, TS, EL2, RA, BH, RH

DISTRIBUTION STATEMENT A
APPROVED FOR PUBLIC RELEASE;
DISTRIBUTION IS UNLIMITED

SMCAR FORM 68, 1 MAR 87(TEMP), REPLACES SMCAR FORM 68, 1 JUN 86(TEMP), WHICH MAY BE USED UNTIL EXHAUSTED

DRAWING SIZE D

REVISIONS			
SYM	DESCRIPTION	DATE	APPROVAL
B	REDRAWN WITH CHANGE, INC NOR D8I2ØØ3 88-Ø5-Ø9 (ECP D9I2Ø1Ø 89-Ø3-28)	89-1Ø-Ø9	
C	NOR D412008 941221	950315	RJC

NOTES:

1. APPLICABLE STANDARDS/SPECIFICATIONS:
   A. DOD-STD-ØØ1ØØ (AR)
   B. ANSI Y14.5-1973

2. IDENTIFICATION OF THE SUGGESTED SOURCES OF SUPPLY HEREON IS NOT TO BE CONSTRUED AS A GUARANTEE OF PRESENT OR CONTINUED AVAILABILITY AS A SOURCE OF SUPPLY FOR THE ITEM.

3. ITEM IDENTIFICATION: APPLY THE FOLLOWING MARKING TO CONTAINER IAW MIL-STD-13Ø.

192ØØ-12725Ø39-[ ]—APPLICABLE DASH NO.
MFR-[ ]-[ ]
MANUFACTURER'S CAGE CODE — PART NO.

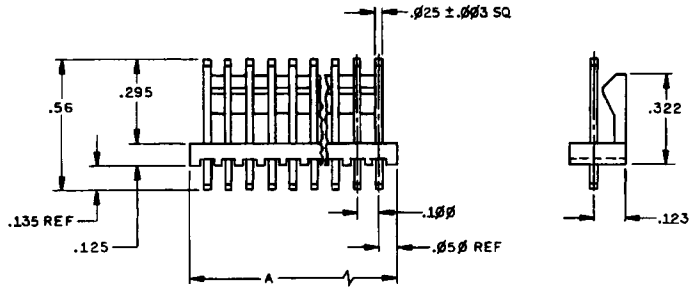

PART NO.	DIM "A"	NO. OF PINS	VENDOR PART NO.
12725Ø39-1	.6ØØ ±.ØØ3	6	22-23-2Ø61
12725Ø39-2	1.3ØØ ±.ØØ7	13	22-23-2131

SUGGESTED SOURCE(S) OF SUPPLY				
PART NO.	VENDOR ADDRESS	VENDOR CAGE CODE	VENDOR PART NO.	ITEM IDENTIFICATION (3.)
192ØØ-12725Ø39-1	MOLEX, INC LISLE, IL. 6Ø532	27264	22-23-2Ø61	192ØØ-12725Ø39-1 MFG-27264-22-23-2Ø61
192ØØ-12725Ø39-2	MOLEX, INC LISLE, IL. 6Ø532	27264	22-23-2131	192ØØ-12725Ø39-2 MFG-27264-22-23-2131

DISTRIBUTION STATEMENT A.
APPROVED FOR PUBLIC RELEASE;
DISTRIBUTION IS UNLIMITED.

SPECIFICATION CONTROL DRAWING
PART NO. SEE TABLE

12725Ø73	GUFS-RETS	MECHANICAL PROPERTIES	DO NOT SCALE DRAWING	ORIGINAL DATE OF DRAWING 84-Ø7-Ø5	U.S. ARMY ARMAMENT RESEARCH, DEVELOPMENT AND ENGINEERING CENTER PICATINNY ARSENAL, NEW JERSEY 07806-5000
NEXT ASSY	USED ON	TP	UNLESS OTHERWISE SPECIFIED DIMENSIONS ARE IN INCHES	DRAFTSMAN HS	CONNECTOR, SOCKET
APPLICATION		TS	TOLERANCES ON DECIMALS ± .XX .XXX	ENGR	
		EL2	FRACTIONS ± ANGLES ±	ENGR	
		RA	THIRD ANGLE PROJECTION	ENGR	
		BH		P. HOWARD ROBERTSON	SIZE D CAGE CODE 19200 12725Ø39
		RH		JOHN BEDARD	SCALE NONE UNIT WT. SHEET

SMCAR FORM 68, 1 MAR 97(TEMP), REPLACES SMCAR FORM 68, 1 JUN 86(TEMP), WHICH MAY BE USED UNTIL EXHAUSTED

APPLICATION		REVISIONS			
NEXT ASSY	USED ON	SYM	DESCRIPTION	DATE	APPROVAL
FINAL	GUFS	F	INC NOR [illegible]12001 91-04-16 (ECP D2I2020 [illegible])	93[illegible]12[illegible]	[illegible]
		F	NOR D4I4017 94-05-18	94070[illegible]	[illegible]

DESCRIPTION

DEVICE CONSISTS OF:

1 EACH - FIRING ASSEMBLY, GUFS
P/N 12725001-1

1 EACH - CABLE ASSEMBLY, INPUT
P/N 12725002

NOTE:

1. SPECS MIL-F-13926 AND MIL-G-70617 APPLY.
2. FOR INSTALLATION REFER TO DRAWING NUMBER 9387660.

TABLE	
12725085	OBSOLETE DESIGN
12725085-1	FOR NEW PROCUREMENT

DISTRIBUTION STATEMENT A. APPROVED FOR PUBLIC RELEASE; DISTRIBUTION IS UNLIMITED.

SEE SEPARATE PARTS LIST - SEE TABLE

PART NO. SEE TABLE

ORIGINAL DATE OF DRAWING	U S ARMY ARMAMENT RESEARCH AND DEVELOPMENT CENTER DOVER, NEW JERSEY 07801		
84-07-05			
DRAFTSMAN TYPED / CHECKER TM	GUNFIRE SIMULATOR		
ENGR / ENGR			
ENGR / ENGR			
[signature]	SIZE A	FSCM NO 19200	12725085
[signature]	SCALE —	UNIT WT	SHEET

ARRADCOM FORM 65 JUN 78 REPLACES SARPA FORM 1038 OCT 75 WHICH IS OBSOLETE

DRAWING SIZE F

ZONE	LTR	DESCRIPTION	DATE (YR MO DA)	APPROVED
	-	INC NOR D812003 88-05-09 (ECP D912012 89-06-30) (ECP D812053 88-10-18)	89-10-20	[illegible]
	A	INC NOR D112001 91-04-16 (ECP D213017 92-05-08) (ECP D213018 92-05-08) (ECP D212012 92-06-23)	93-01-09	[illegible]
	B	NOR D513034 95-09-27	96-08-05	FET
	C	NOR D613013 960828	961004	HJS
	D	NOR H713006/970505	971010	FET

NOTES:

1. SPECIFICATION MIL-C-70618, MIL-F-13926 AND ANSI Y14.5-1973 APPLY.
2. ASSEMBLE COMPONENTS TO PRINTED WIRING BOARD LOCATIONS SHOWN. COMPONENTS DESIGNATIONS ARE SHOWN IN APPROXIMATE LOCATIONS.
3. VISUALLY INSPECT COMPONENT ASSEMBLY FOR PROPER ORIENTATION AND INSTALLATION PRIOR TO SOLDERING TO PWB.
4. SOLDER COMPONENTS TO PWB IN ACCORDANCE WITH DRAWING 11785666, NOTE 2.
5. CLEAN ASSEMBLY AND VISUALLY INSPECT FOR OVERALL WORKMANSHIP IN ACCORDANCE WITH REQUIREMENT 9 OF MIL-STD-454.
6. EACH COMPLETED ASSEMBLY WILL BE SUBJECTED TO 100% FUNCTIONAL TESTING PRIOR TO BURN IN SCREENING AND AFTER COMPLETION OF BURN IN SCREENING IN ACCORDANCE WITH MIL-C-70618.
7. EACH ACCEPTED CCA WILL BE SERIALIZED BY PERMANENTLY MARKING SERIAL NUMBER IN THE AREA PROVIDED ON THE PWB.
8. A MINIMUM 3 MIL PROTECTIVE UNIFORM COATING OF INSULATION SEALANT MIL-I-46058 TYPE UR WILL BE APPLIED TO ALL SURFACES AND ALLOWED TO CURE.
9. BOND BUMPER, TO THE UPPER AND LOWER EDGES OF PWB, USING ADHESIVE, MIL-A-46058 TYPE 2 CL 2.
10. THE COMPLETED CCA INCLUDING ALL INSULATED COMPONENTS WILL BE SUBJECTED TO THE FIRST ARTICLE FUNCTIONAL AND ENVIRONMENTAL TEST SEQUENCE IN ACCORDANCE WITH MIL-C-70618.
11. THE APPROVED QUALIFICATION SAMPLE WILL SERVE AS THE BASE LINE CONFIGURATION FOR SUBSEQUENT PRODUCTION CCA UNITS. PRODUCTION UNITS WILL BE SUBJECTED TO FUNCTIONAL AND ENVIRONMENTAL SAMPLING TEST IN ACCORDANCE WITH MIL-C-70618 PRIOR TO ACCEPTANCE OF EACH PRODUCTION LOT.
12. FOR ELECTRICAL DATA, REFER TO SCHEMATIC DRAWING 12725088.
13. ELECTROSTATIC DISCHARGE CONTROL PROGRAM FOR PROTECTION OF ELECTRICAL AND ELECTRONIC PARTS, ASSEMBLIES AND EQUIPMENT SHALL BE IN ACCORDANCE WITH MIL-STD-1686 CLASS I AND MIL-HDBK-263.

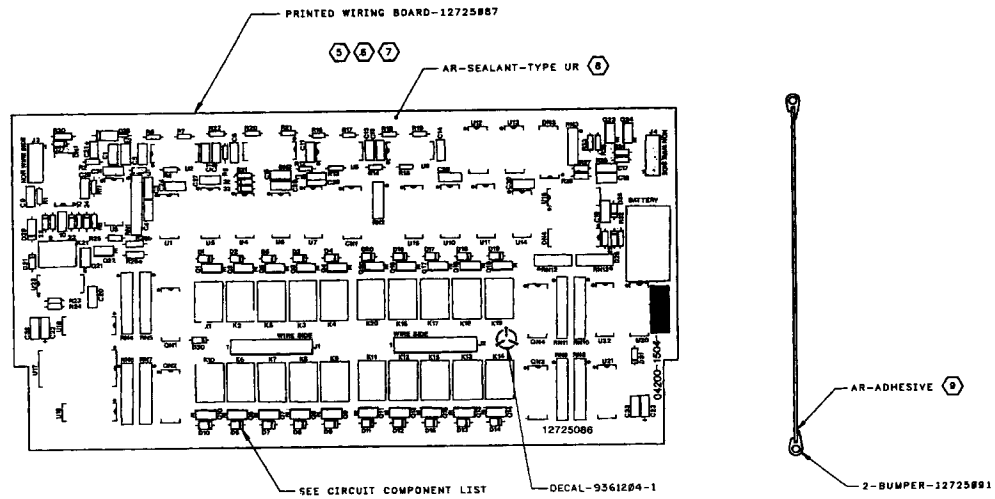

C	D	REV	REV STATUS OF SHEETS
2	1	SHEET	

INACTIVE FOR NEW DESIGN AND PROCUREMENT, USE INTERCHANGEABLE PART NO. MIL-PRF-70618.

PART NO. 12725086

DISTRIBUTION STATEMENT A. APPROVED FOR PUBLIC RELEASE; DISTRIBUTION IS UNLIMITED.

PMIC			
MECHANICAL PROPERTIES			
YP			
TS			
ELE			
RA		12725014-1	GUFS
SH		NEXT ASSY	USED ON
RH		APPLICATION	

DO NOT SCALE DRAWING. UNLESS OTHERWISE SPECIFIED DIMENSIONS ARE IN INCHES TOLERANCES ON DECIMAL FRACTION 2 PL ± 3 PL ± THIRD ANGLE PROJECTION

CONTRACT NUMBER

CONTRACTOR

DRAWN BY TF DATE (YR-MO-DA) 88-07-28

CHECKER RW ENGINEER RAW JNG

DRAWING APPROVAL LEON OSTOPOWICZ

DESIGN APPROVAL DOUGLAS M LAIRD

DESIGN ACTIVITY U.S. ARMY ARMAMENT RESEARCH, DEVELOPMENT AND ENGINEERING CENTER PICATINNY ARSENAL, NEW JERSEY 07806-5000

CIRCUIT CARD ASSEMBLY ELECTRONICS

SIZE F CAGE CODE 19200 12725086

SCALE NONE UNIT WT. SHEET 1 OF 2

SMCAR FORM 69, 1 DEC 87(TEMP) REPLACES SMCAR FORM 69, 1 JUL 87(TEMP) WHICH MAY BE USED UNTIL EXHAUSTED

DRAWING SIZE F

REVISIONS				
ZONE	LTR	DESCRIPTION	DATE (YR MO DA)	APPROVED
	-	INC NOR D812003 88-05-09 (ECP D812059 88-10-18)	89-10-20	
	A	INC NOR D12001 91-04-16 (ECP D213017 92-05-08) (ECP D213018 92-05-08) (ECP D212012 92-06-23)	93-01-09	
	B	NOR D513034 95-09-27	96-08-05	FET
	C	NOR D613013 960828	961004	HJS

CIRCUIT COMPONENT LIST

REF DES	PART NO. OR TYPE DESIGNATION	SPEC NO.	REMARKS	NO. REQD
J3, J4	12725039-1	12725039	CONNECTOR 6 PIN	2
J1, J2	12725039-2	12725039	CONNECTOR 13 PIN	2
C3, 5, 8, 9, 10, 15, 16, 17, 18, 20, 24-33	M39014/01-1535	MIL-C-39014/1	CAPACITOR .01UF, ±10%, 100V	20
C19	M39014/02-1310	MIL-C-39014/2	CAPACITOR .1UF, ±10%, 100V	1
C1, 4, 6, 7, 11, 12, 13, 14	M39014/02-1415	MIL-C-39014/2	CAPACITOR 1MF, ±10%, 50V	8
C2, 22, 23	12725095-1	12725095	CAPACITOR 10UF	3
C21	12725095-2	12725095	CAPACITOR 100UF	1
CN1	12725092	12725092	CAPACITOR NETWORK .01UF	1
R26A, R26B	12725098-1	12725098	RESISTOR .68 OHMS, 1W	2
R30	12725095-2	12725095	RESISTOR 10 OHMS, 1W	1
R22, 27, 28	RN55D4750FP	MIL-R-55182/1	RESISTOR 475 OHMS, ±5%, 1/8W	3
R1, 9, 10, 20, 21, 25, 31, 33, 34, 35, 36	RN55D1001FP	MIL-R-55182/1	RESISTOR 1K, ±5%, 1/8W	11
R23, 24	RN55D2211FP	MIL-R-55182/1	RESISTOR 2.21K, ±5%, 1/8W	2
R11	RN55D3321FP	MIL-R-55182/1	RESISTOR 3.32K, ±5%, 1/8W	1
R4, 8	RN55D1002FP	MIL-R-55182/1	RESISTOR 10K, ±5%, 1/8W	2
R5, 7, 13, 15, 17, 19	RN55D1502FP	MIL-R-55182/1	RESISTOR 15K, ±5%, 1/8W	6
R2, 12, 16, 29	RN55D3322FP	MIL-R-55182/1	RESISTOR 33.2K, ±5%, 1/8W	4
R14, 18	RN55D1003FP	MIL-R-55182/1	RESISTOR 100K, ±5%, 1/8W	2
R6, 32	RCR05G205JP	MIL-R-39008/4	RESISTOR 2 MEG, ±5%, 1/8W	2
R3	RCR05G565JP	MIL-R-39008/4	RESISTOR 5.6 MEG, ±5%, 1/8W	1
RN2, 3, 12, 13	M83401/07K1002GC	MIL-R-83401/7	RESISTOR NETWORK 10K	4
RN5, 7, 9, 11	M83401/09K1002GC	MIL-R-83401/9	RESISTOR NETWORK 10K	4
RN4, 6, 8, 10	M83401/09K1001GG	MIL-R-83401/9	RESISTOR NETWORK 1K	4
RN1	M83401/09K1002GC	MIL-R-83401/9	RESISTOR NETWORK 10K	1
D1-20, 21, 27, 29	9355942	9355942	DIODE	23
D24	JAN1N4370	MIL-S-19500/127	ZENER DIODE	1
D22, 23	JAN1N754	MIL-S-19500/127	ZENER DIODE	2
DN1, 2, 3, 4	JAN1N6101	MIL-S-19500/474	DIODE NETWORK	4
D25, 26, 30, 31, 32, 33	JAN1N914	MIL-S-19500/116	DIODE	6
D28	JAN1N5555	MIL-S-19500/434	DIODE TRANSORB	1
QN1, 2, 3, 4	12725093	12725093	TRANSISTOR ARRAY CA3083	4
Q1-24	12599318	12599318	TRANSISTOR 2N6038	24
U1	M38510/05051BCX	MIL-M-38510/50	INTEGRATED CIRCUIT 4011	1
U20	M38510/05951BEX	MIL-M-38510/50	INTEGRATED CIRCUIT 4028	1
U5, 7, 11	M38510/05553BCX	MIL-M-38510/55	INTEGRATED CIRCUIT 4049	3
U18, 19, 21, 22	M38510/05554BEX	MIL-M-38510/55	INTEGRATED CIRCUIT 4050	4
U4, 6, 12, 13, 14	M38510/17001BCX	MIL-M-38510/170	INTEGRATED CIRCUIT 4001	5
U3	M38510/11201BCX	MIL-M-38510/112	INTEGRATED CIRCUIT LM139	1
U23	M38510/10201BCX	MIL-M-38510/102	INTEGRATED CIRCUIT LM723	1
U2, 8, 9	M38510/10902BCX	MIL-M-38510/109	INTEGRATED CIRCUIT 556	3
U17	M38510/17301BXX	MIL-M-38510/173	INTEGRATED CIRCUIT 4514	1
U10, 15, 16	DESC 7702301EX	7702301	INTEGRATED CIRCUIT 4520	3
BT1	12599320	12599320	BATTERY	1
K1-21	12725028	12725028	RELAY	21
2	93612004-1		DECAL	1

DISTRIBUTION STATEMENT A.
APPROVED FOR PUBLIC RELEASE; DISTRIBUTION IS UNLIMITED.

PART NO. 12725086

PMIC
MECHANICAL PROPERTIES
VP
VS
ECP
RA
BH
RH
12225814-1 NEXT ASSY
CUFS USED ON
APPLICATION

DO NOT SCALE DRAWING
UNLESS OTHERWISE SPECIFIED DIMENSIONS ARE IN INCHES
TOLERANCES ON DECIMAL FRACTION
2 PL ± ±
3 PL ±
THIRD ANGLE PROJECTION
MATL ENGR

CONTRACT NUMBER
CONTRACTOR
DRAWN BY
CHECKER
DATE(YR-MO-DA) 96-07-26
ENGINEER
DRAWING APPROVAL
DESIGN APPROVAL

DESIGN ACTIVITY: U.S. ARMY ARMAMENT RESEARCH, DEVELOPMENT AND ENGINEERING CENTER PICATINNY ARSENAL, NEW JERSEY 07806-5000

CIRCUIT CARD ASSEMBLY ELECTRONICS

SIZE F | CAGE CODE 19200 | 12725086
SCALE | SHT WT | SHEET 2

SMCAR FORM 69, 1 DEC 87(TEMP) REPLACES SMCAR FORM 69, 1 JUL 87(TEMP)
WHICH MAY BE USED UNTIL EXHAUSTED

DRAWING SIZE F

NOTES:

1. SPEC MIL-F-13926 AND ANSI Y32.2-1975 APPLY.

REVISIONS			
SYM	DESCRIPTION	DATE	APPROVAL
—	PRODUCT BASELINE NOR D812003 88-05-09	8909-26	
A	NOR D412008 941221	950315	RJC
B	NOR D413077 950111	960612	RLV
C	NOR D613013 960828	961004	HJS

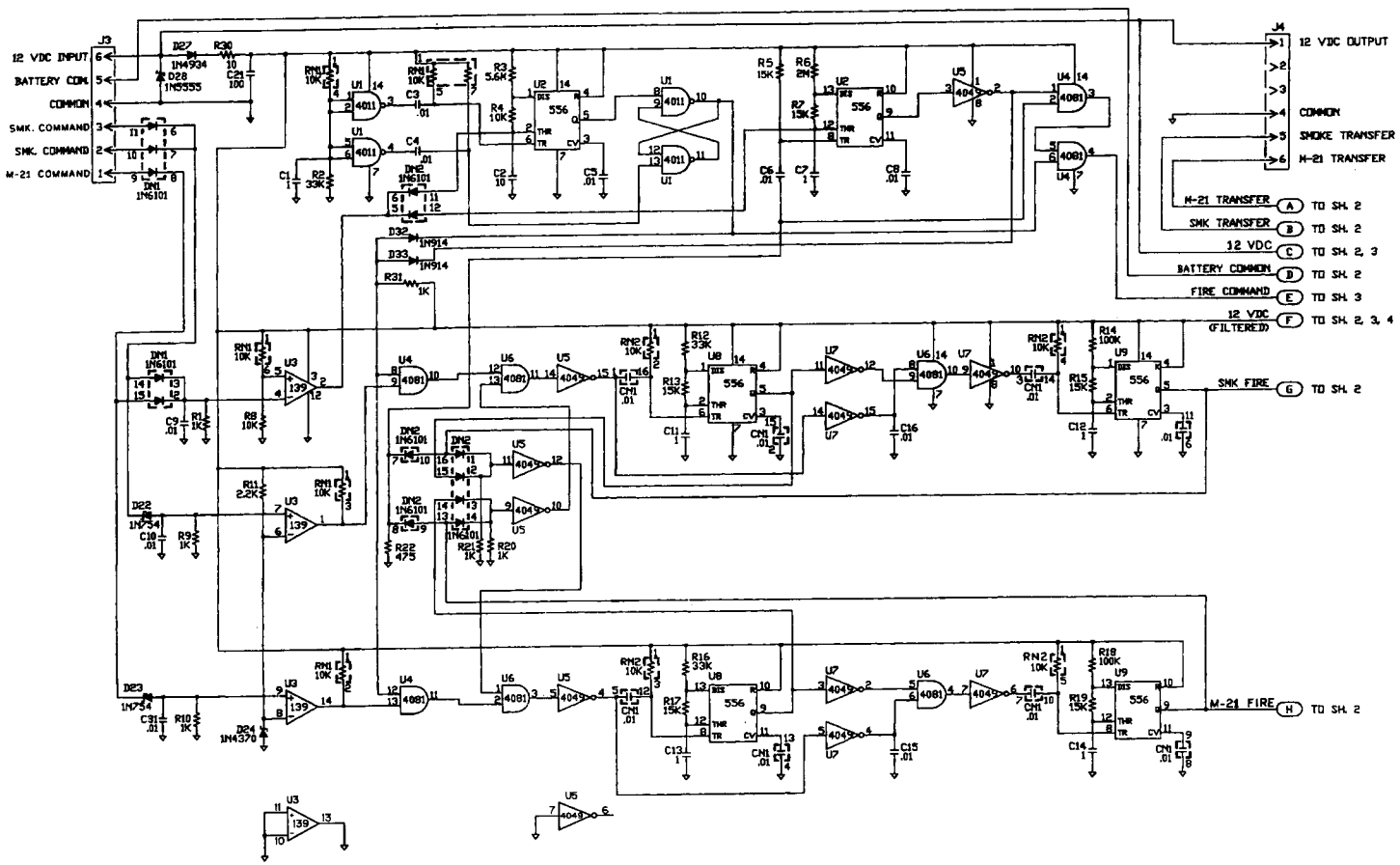

B	B	C	C	REV	REV STATUS OF SHEETS
4	3	2	1	SHEET	

DISTRIBUTION STATEMENT A.
APPROVED FOR PUBLIC RELEASE;
DISTRIBUTION IS UNLIMITED.

PART NO.

12725086	GUFS	DO NOT SCALE DRAWING	ORIGINAL DATE OF DRAWING 88-04-22
NEXT ASSY	USED ON	UNLESS OTHERWISE SPECIFIED DIMENSIONS ARE IN INCHES	U.S. ARMY ARMAMENT RESEARCH, DEVELOPMENT AND ENGINEERING CENTER PICATINNY ARSENAL, NEW JERSEY 07806-5000
APPLICATION		TOLERANCES ON DECIMALS ± FRACTIONS ± ANGLES ± THIRD ANGLE PROJECTION	SCHEMATIC, ELECTRONICS CCA
			SIZE F CAGE CODE 19200 12725088
			SCALE UNIT WT. SHEET 1 OF 4

SMCAR FORM 69, 1 JUL 87(TEMP) REPLACES SMCAR FORM 69, 1 JUN 86(TEMP) WHICH IS OBSOLETE

DRAWING SIZE F

REVISIONS			
SYM	DESCRIPTION	DATE	APPROVAL
–	PRODUCT BASELINE NOR D812003 88-05-09	89-09-26	
B	NOR D413077 950111	960612	RLV
C	NOR D613013 960828	961004	HJS

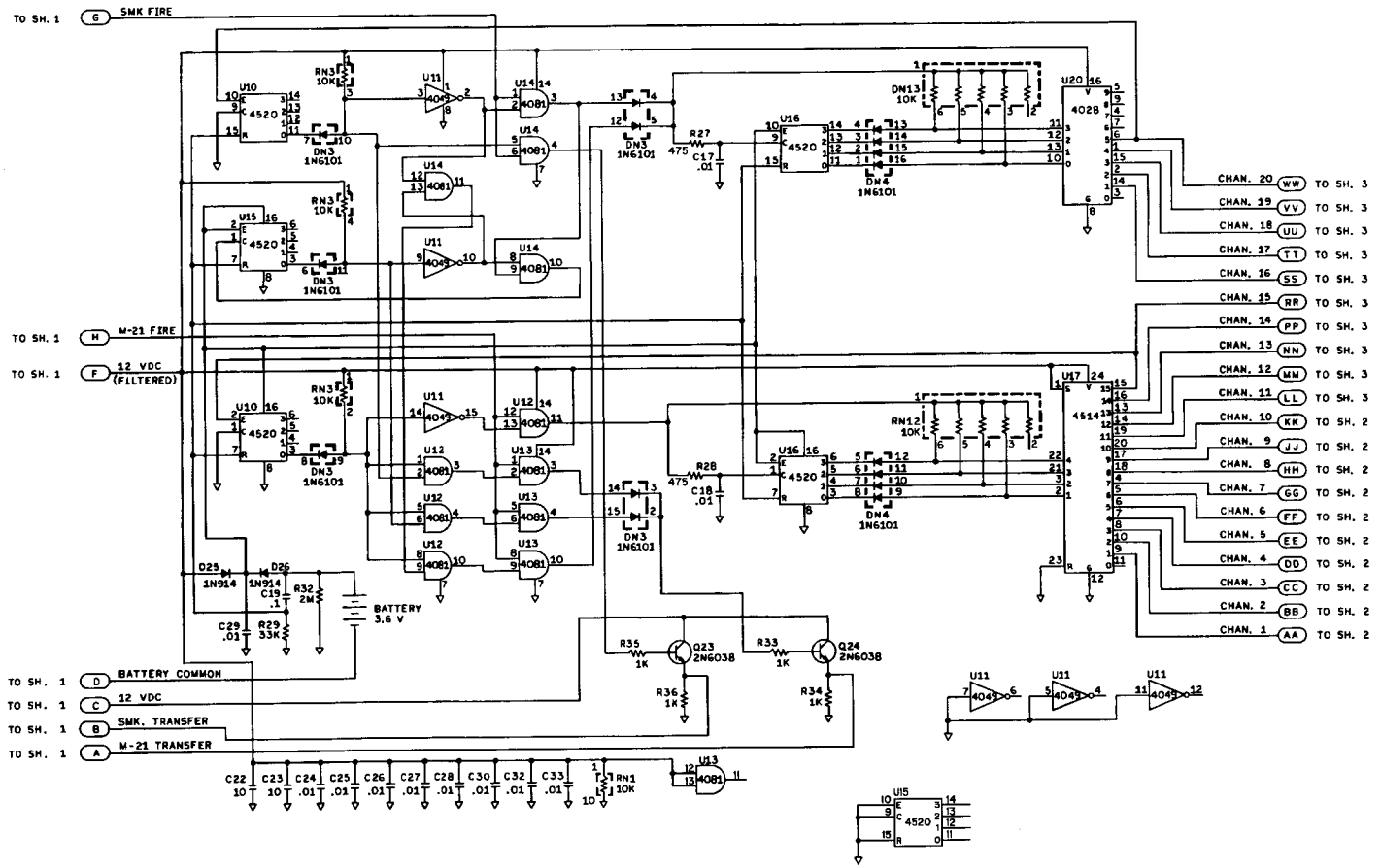

PART NO.

NEXT ASSY	USED ON	MECHANICAL PROPERTIES	DO NOT SCALE DRAWING	ORIGINAL DATE OF DRAWING 88-04-22	U.S. ARMY ARMAMENT RESEARCH, DEVELOPMENT AND ENGINEERING CENTER PICATINNY ARSENAL, NEW JERSEY 07806-5000
APPLICATION			UNLESS OTHERWISE SPECIFIED DIMENSIONS ARE IN INCHES	DRAFTSMAN RCW	CHECKER RW
			TOLERANCES ON DECIMALS ±	ENGR RCW	ENGR
			FRACTIONS ± ANGLES ±	ENGR	ENGR
			THIRD ANGLE PROJECTION	LEON OSTOPOWICZ	SCHEMATIC, ELECTRONICS CCA
				DOUGLAS M. LAIRD	SIZE F CAGE CODE 19200 12725088
					SCALE UNIT WT. SHEET 2

SMCAR FORM 69, 1 JUL 87(TEMP) REPLACES SMCAR FORM 69, 1 JUN 86(TEMP) WHICH IS OBSOLETE

DRAWING SIZE F

REVISIONS			
SYM	DESCRIPTION	DATE	APPROVAL
–	PRODUCT BASELINE NOR DBI 2003 88-05-09	89-09-26	
B	NOR D413077 950111	960612	RLV

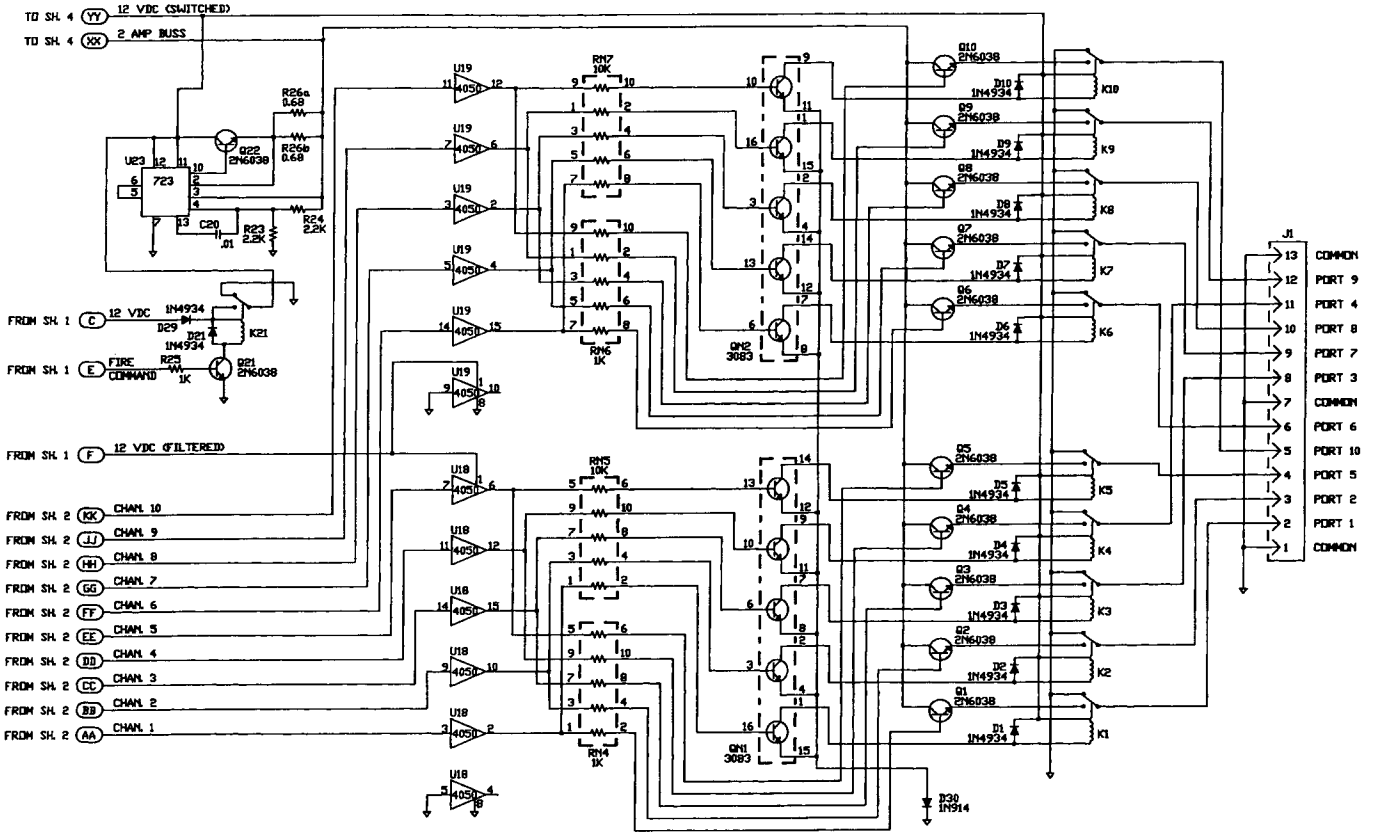

PART NO.

NEXT ASSY	USED ON	MECHANICAL PROPERTIES	DO NOT SCALE DRAWING	ORIGINAL DATE OF DRAWING 88-04-22
APPLICATION		TP, TS, ELS, RA, SH, RH	UNLESS OTHERWISE SPECIFIED DIMENSIONS ARE IN INCHES	DRAFTSMAN / CHECKER
			TOLERANCES ON DECIMALS ± FRACTIONS ± ANGLES ±	ENGR / ENGR
			THIRD ANGLE PROJECTION	ENGR / ENGR

U.S. ARMY
ARMAMENT RESEARCH, DEVELOPMENT AND ENGINEERING CENTER
PICATINNY ARSENAL, NEW JERSEY 07806-5000

SCHEMATIC,
ELECTRONICS CCA

SIZE F | CAGE CODE 19200 | 12725088

SCALE | UNIT WT. | SHEET 3

SMCAR FORM 69, 1 JUL 87(TEMP) REPLACES SMCAR FORM 69, 1 JUN 86(TEMP) WHICH IS OBSOLETE

DRAWING SIZE F

REVISIONS			
SYM	DESCRIPTION	DATE	APPROVAL
—	PRODUCT BASELINE NOR D812003 88-05-09	8909-26	
B	NOR D413077 950111	960612	RLV

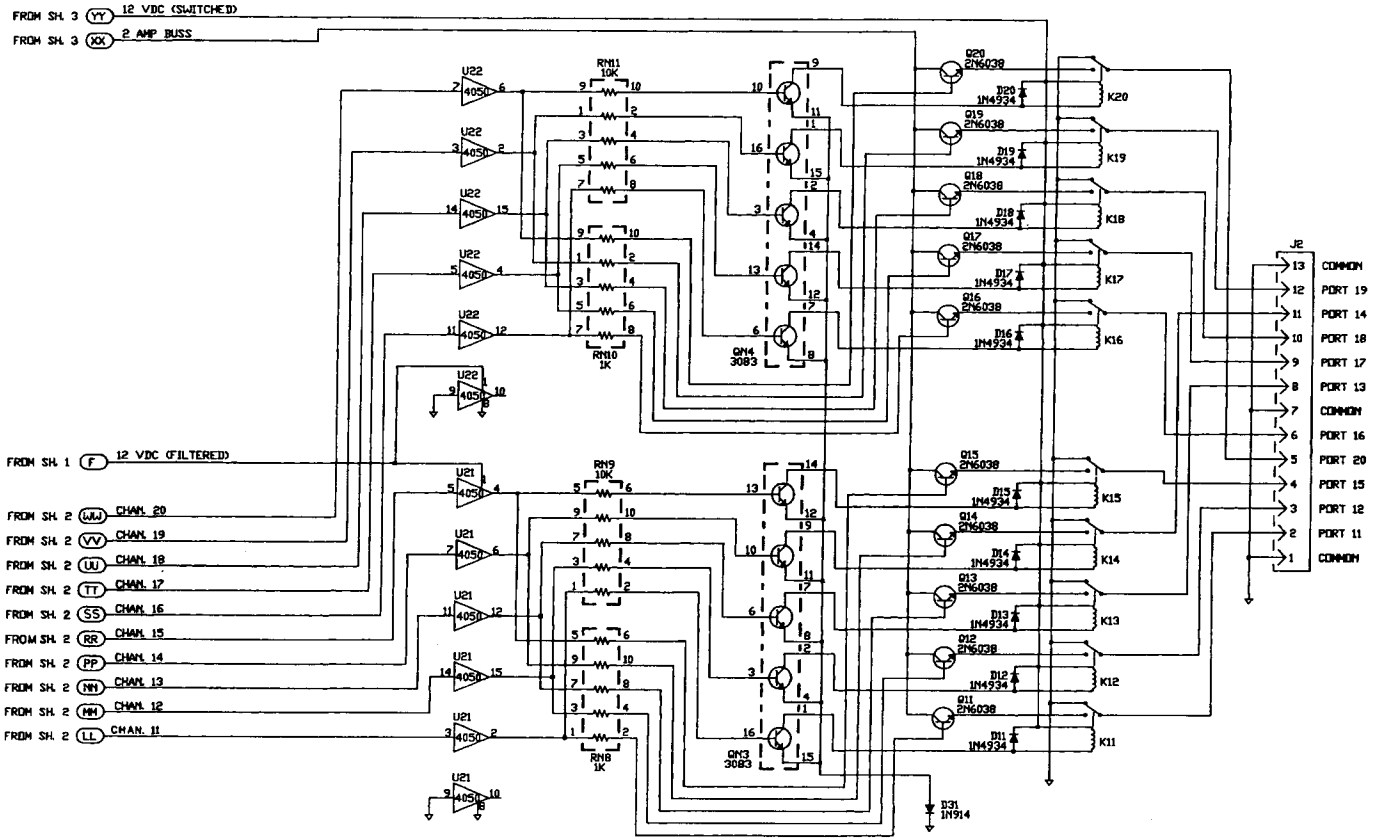

PART NO.

NEXT ASSY	USED ON	MECHANICAL PROPERTIES	DO NOT SCALE DRAWING	ORIGINAL DATE OF DRAWING 88-04-22	U.S. ARMY ARMAMENT RESEARCH, DEVELOPMENT AND ENGINEERING CENTER PICATINNY ARSENAL, NEW JERSEY 07806-5000
APPLICATION		YP TS EL2 RA BH RH	UNLESS OTHERWISE SPECIFIED DIMENSIONS ARE IN INCHES TOLERANCES ON DECIMALS ± FRACTIONS ± ANGLES ± THIRD ANGLE PROJECTION	DRAFTSMAN CHECKER ENGR ENGR ENGR ENGR	SCHEMATIC, ELECTRONICS CCA
				Jean Ostrowski Douglas M Lund	SIZE F CAGE CODE 19200 12725088 SCALE UNIT WT. SHEET 4

SMCAR FORM 69, 1 JUL 87(TEMP) REPLACES SMCAR FORM 69, 1 JUN 86(TEMP) WHICH IS OBSOLETE

DRAWING SIZE D

REVISIONS			
SYM	DESCRIPTION	DATE	APPROVAL
—	PRODUCT BASELINE NOR D8I2003 88-05-09 (ECP D8I2054 88-10-18)	89-09-28	[signature]
A	INC NOR D1I2002 90-05-13 (ECP D1I2024 91-10-29)	92-07-07	[signature]
B	INC NOR D1I2001 91-04-16 (ECP D2I3017 92-05-08)	93-01-13	[signature]

NOTES:

1. SPEC MIL-F-13926 AND QAP 12725090 APPLY.
2. STRIP AND TIN WIRE ENDS AS REQUIRED PRIOR TO SOLDERING TO CONNECTOR MS3102.
3. SOLDER IN ACCORDANCE WITH DRAWING 11785556, NOTE 1 USING SOLDER, SN60WRP2, PER QQ-S-571.
4. INSTALL MARKING T3, T4 AND T5 TO CONNECTOR LEADS B, C AND G PER TABLE AND CRIMP TERMINAL LUGS TO WIRES.
5. ASSEMBLE LEADS TO CONNECTOR P3 PER TABLE.
6. INSTALL MARKINGS T1, T2 AND T6 TO CONNECTOR LEADS 4, 5 AND 6 OF CONNECTOR P3 PER TABLE AND CRIMP TERMINAL LUGS TO WIRES.
7. SPOT TIE OR OTHERWISE SECURE LEADS BETWEEN CONNECTORS. NUMBER OF TIE POINTS OPTIONAL.
8. CHECK CONTINUITY PER TABLE.
9. MARK IDENTIFICATION SLEEVES PER MIL-M-60903 USING .12 HIGH CHARACTERS, AND INK (WHITE) EPOXY PER MIL-I-43553.

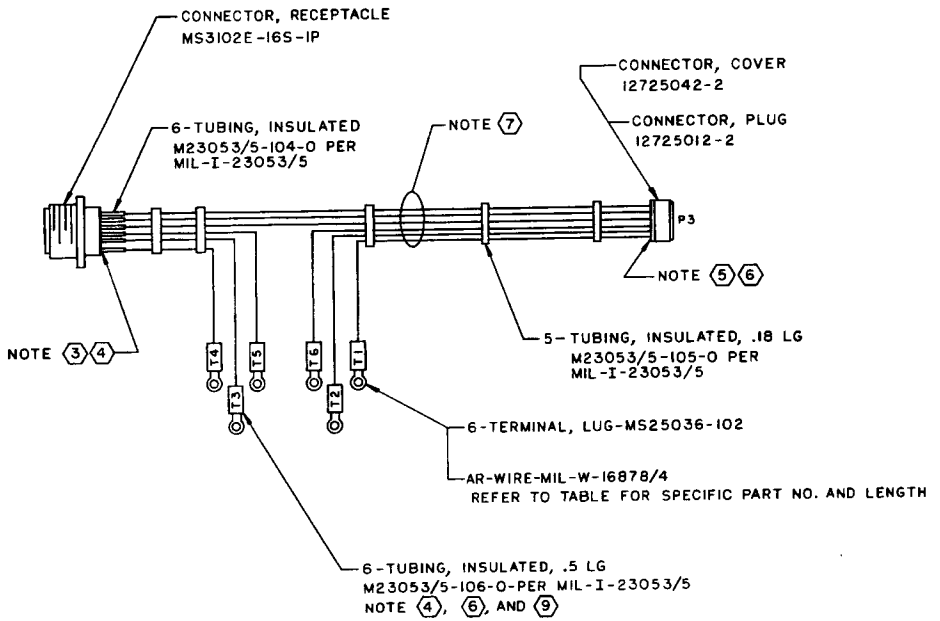

INPUT CONN.	P3	OTHER	LENGTH ±.25	COLOR	PART NUMBER
A	1	—	10	BLUE	M16878/4BFB6
B	—	T3	6	ORANGE	M16878/4BFB3
C	—	T4	6	GREEN	M16878/4BFB5
D	—	—	—	—	—
E	2	—	10	WHITE	M16878/4BFB9
F	3	—	10	BROWN	M16878/4BFB1
G	—	T5	6	BLACK	M16878/4BFB0
—	4	T1	10	BLACK	M16878/4BFB0
—	5	T6	10	VIOLET	M16878/4BFB7
—	6	T2	10	ORANGE	M16878/4BFB3

DISTRIBUTION STATEMENT A. APPROVED FOR PUBLIC RELEASE; DISTRIBUTION IS UNLIMITED.

PART NO. 12725090

NEXT ASSY	USED ON
12725015-1	GUFS

APPLICATION

MECHANICAL PROPERTIES: YP, TS, EL2, RA, BH, RH

DO NOT SCALE DRAWING
UNLESS OTHERWISE SPECIFIED DIMENSIONS ARE IN INCHES
TOLERANCES ON DECIMALS ± —
FRACTIONS ± — ANGLES ± —
THIRD ANGLE PROJECTION

ORIGINAL DATE OF DRAWING 88-03-22
DRAFTSMAN T.Z. CHECKER
ENGR ING ENGR IRC
ENGR ENGR
LEON OSTOPOWICZ
DOUGLAS M. LAIRD

U.S. ARMY
ARMAMENT RESEARCH, DEVELOPMENT AND ENGINEERING CENTER
PICATINNY ARSENAL, NEW JERSEY 07806-5000

RECEPTACLE ASSY, INPUT

SIZE D CAGE CODE 19200 12725090
SCALE UNIT WT. SHEET

SMCAR FORM 68, 1 MAR 87(TEMP), REPLACES SMCAR FORM 68, 1 JUN 86(TEMP), WHICH MAY BE USED UNTIL EXHAUSTED

DRAWING SIZE D

REVISIONS				
ZONE	LTR	DESCRIPTION	DATE (YR MO DA)	APPROVED
	C	NOR D5I3024 950516	950706	HJS

NOTES:

1. APPLICABLE STANDARDS/SPECIFICATIONS:
   A. DOD-STD-00100D (AR)
   B. ANSI Y14.5-1982
2. ONLY THE ITEMS DESCRIBED ON THIS DRAWING WHEN PROCURED FROM THE VENDOR(S) LISTED HEREON IS APPROVED BY U.S. ARMY ARMAMENT RESEARCH, DEVELOPMENT AND ENGINEERING CENTER (ARDEC), PICATINNY ARSENAL, NJ 07806-5000 FOR USE IN THE APPLICATION SPECIFIED HEREON. A SUBSTITUTE ITEM SHALL NOT BE USED WITHOUT PRIOR APPROVAL BY ARDEC.
3. IDENTIFICATION OF THE APPROVED SOURCE(S) OF SUPPLY HEREON IS NOT TO BE CONSTRUED AS A GUARANTEE OF PRESENT OR CONTINUED AVAILABILITY AS A SOURCE OF SUPPLY FOR THE ITEM DESCRIBED ON THE DRAWING.
5. ITEM IDENTIFICATION: APPLY THE FOLLOWING MARKING TO CONTAINER IN ACCORDANCE WITH MIL-STD-130.

   19200SOCN12725092

   MFR-[ ] ← MANUFACTURER'S CAGE CODE

3. REQUIREMENTS:
   A. OPERATING TEMPERATURE RANGE: -55°C TO +125°C
   B. CAPACITANCE CHANGE OVER TEMPERATURE: ± 15%
   C. DISSIPATION FACTOR: ≤ 3.0%
   D. DIELECTRIC STRENGTH: WITHSTAND AT 25°C 250°C 250% OF RATED VOLTAGE FOR A PERIOD OF NOT LESS THAN 1, NOR MORE THAN 3 SECONDS.
   E. INSULATION RESISTANCE: MINIMUM PRODUCT OF DIELECTRIC RESISTANCE AND CAPACITANCE SHALL BE 1000 MEGOHM-MICROFARADS.
   F. WORKING VOLTAGE: 50 WVDC AT 125°C
   G. CAPACITANCE VALUE: .01 MICROFARAD PER SECTION
   H. TOLERANCE: ± 10% MAX.
   I. NUMBER OF CAPACITORS PER UNIT: 8
   J. LIFE: WITHSTAND 1000 HOURS LIFE TEST AT 200% RATED VOLTAGE AND 125°C TEMPERATURE.
   K. PACKAGING: 16 PIN DIP

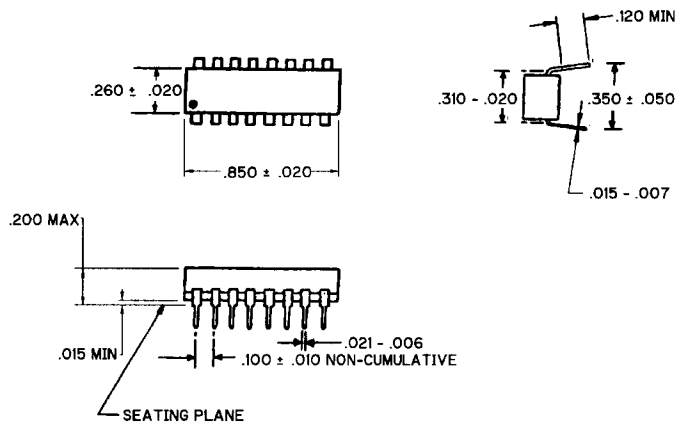

APPROVED SOURCE(S) OF SUPPLY				
PART NO.	VENDOR		VENDOR PART NO.	ITEM IDENTIFICATION
	ADDRESS	CAGE CODE		
19200SOCN12725092	DALE ELECTRONICS, INC. 2300 RIVERSIDE BLVD. NORFOLK, NE 68702-0074	91637	MDRC-1600-S31	19200SOCN12725092 MFR-91637

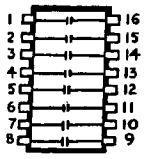

SCHEMATIC

DISTRIBUTION STATEMENT A.
APPROVED FOR PUBLIC RELEASE;
DISTRIBUTION IS UNLIMITED.

SOURCE CONTROL DRAWING

PART NO. 12725092

NEXT ASSY	USED ON
12725086	GUFS

APPLICATION

DO NOT SCALE DRAWING
UNLESS OTHERWISE SPECIFIED DIMENSIONS ARE IN INCHES
TOLERANCES ON
DECIMAL FRACTION
2 PL ± — " —
3 PL ± .010
THIRD ANGLE PROJECTION

DRAWN BY 88-03-22
CHECKED
DESIGN APPROVAL
MESSIN APPROVAL

U.S. ARMY
ARMAMENT RESEARCH, DEVELOPMENT AND ENGINEERING CENTER
PICATINNY ARSENAL, NEW JERSEY 07806-5000

CAPACITOR NETWORK

SIZE	CAGE CODE	
D	19200	12725092

SCALE | UNIT WT. | SHEET

SMCAR FORM 68, 1 DEC 87(TEMP), REPLACES SMCAR FORM 68, 1 MAR 87(TEMP), WHICH MAY BE USED UNTIL EXHAUSTED

DRAWING SIZE D

REVISIONS				
ZONE	LTR	DESCRIPTION	DATE (YR MO DA)	APPROVED
	—	PRODUCTION RELEASE NOR 0812003 88-05-09 (ECP 0812058 88H018)	89-02-14	

NOTES:

1. PERFORMANCE:

   A. CLASS GENERAL PURPOSE HIGH CURRENT - 5 NPN TRANSISTOR ARRAY

   B. CASE TYPE - 16 PIN CERAMIC DIP OUTLINE D2 FRIT SEAL

   C. OPERATING TEMPERATURE RANGE - -55°C TO +125°C

   D. POWER DISSIPATION
      (1) PER TRANSISTOR - 500 MW
      (2) TOTAL PACKAGE - 750 MW

   E. TRANSISTOR CHARACTERISTICS @ 25°C
      (1) COLLECTOR EMITTER VOLTAGE (V_{CEO}) - 15 V
      (2) COLLECTOR BASE VOLTAGE (V_{CBO}) - 20 V
      (3) COLLECTOR SUBSTRATE VOLTAGE (V_{CIO}) - 20 V
      (4) EMITTER BASE VOLTAGE (V_{EBO}) - 5 V
      (5) COLLECTOR CURRENT (I_C) - 100ma
      (6) BASE CURRENT (I_B) - 20 ma
      (7) DC FORWARD CURRENT TRANSFER RATIO (h_{FE}) - 40
      (8) BASE EMITTER VOLTAGE (V_{BE}) - 0.65 V
      (9) GAIN BANDWIDTH PRODUCT (f_t) - 450 MHZ

2. ONLY THE ITEM DESCRIBED ON THIS DRAWING IS APPROVED BY ARDEC FOR USE IN THE APPLICATION SPECIFIED HEREON. A SUBSTITUDE ITEM SHALL NOT BE USED WITHOUT PRIOR APPROVAL BY ARDEC.

3. IDENTIFICATION OF THE "SUGGESTED SOURCE OF SUPPLY" IS NOT TO BE CONSTRUED AS A GUARANTEE OF PRESENT AND CONTINUED AVAILABILITY AS A SOURCE OF SUPPLY FOR THIS ITEM.

4. ALTERNATE SOURCES MUST BE QUALIFIED AS PART OF THE INTENDED APPLICATION TEST PROGRAM.

5. SUGGESTED SOURCE(S) OF SUPPLY:

   (1) RCA SOLID STATE
   SOMERVILLE, NJ 08876
   CAGE CODE NO. 02735

   VENDOR PART NO. CA3083F/3W

   (2) RCA CORP.
   FINDLAY PLANT
   SOLID STATE DIV.
   1700 FOSTORIA RD.
   FINDLAY, OH 45840- 6220
   CAGE CODE NO. 18714

   (3) RAYTHEON
   EXECUTIVE OFFICES
   141 SPRING ST.
   LEXINGTON, MA 02173- 7801
   CAGE CODE NO. 49956

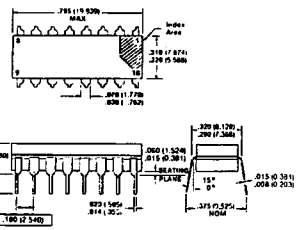

SCHEMATIC

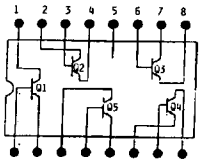

SPECIFICATION CONTROL DRAWING

PART NO. 12725093

PMIC			DO NOT SCALE DRAWING	CONTRACT NUMBER	DESIGN ACTIVITY: U.S. ARMY ARDEC ARMAMENT RESEARCH, DEVELOPMENT AND ENGINEERING CENTER PICATINNY ARSENAL, NEW JERSEY 07806-5000
MECHANICAL PROPERTIES			UNLESS OTHERWISE SPECIFIED DIMENSIONS ARE IN INCHES. TOLERANCES ON DECIMAL 2 PL ± —, 3 PL ± .010; FRACTION ± —	DAAA03-86-C-1504	INTEGRATED CIRCUIT, TRANSISTOR ARRAY-(5 X NPN)
YP			THIRD ANGLE PROJECTION	CONTRACTOR JOAVELL LABORATORIES,INC.	
TS				DRAWN BY TB	DATE(YR-MO-DA) 88-03-22
EL2				CHECKED RCA	ENGINEER
RA				DRAWING APPROVAL	
BH	12725086	GUFS	MATL ENGR	DESIGN APPROVAL	SIZE D, CAGE CODE 19200, 12725093
RH	NEXT ASSY	USED ON		SCALE 2/1	UNIT WT. SHEET
	APPLICATION				

SMCAR FORM 68, 1 DEC 87(TEMP), REPLACES SMCAR FORM 68, 1 MAR 87(TEMP), WHICH MAY BE USED UNTIL EXHAUSTED

DRAWING SIZE C

REVISIONS			
SYM	DESCRIPTION	DATE	APPROVAL
-	PRODUCT BASELINE NOR D8I2003 88-05-09 (ECP D8I2058 88-10-18)	89-09-26	

NOTES:

1. PERFORMANCE:
   - A. OPERATING TEMPERATURE RANGE: -55°C TO +85°C
   - B. CAPACITANCE TOLERANCE: +/- 20%
   - C. IMPEDANCE: .7 TO 270 OHMS @ 10 Hz, 25°C
   - D. VOLTAGE RATING:
     1. WORKING 20 WVDC
     2. SURGE 26VDC
   - E. LIFE TEST: CAPABLE OF WITHSTANDING A 1000 HOUR LIFE TEST AT RATED (20 WVDC) VOLTAGE AND 85°C. AFTER LIFE TEST, THE LEAKAGE CURRENT SHALL NOT EXCEED 200% OF ORIGINAL VALUE, DISSIPATION FACTOR SHALL NOT EXCEED 150% OF VALUE, AND CAPACITANCE SHALL NOT HAVE CHANGED BY MORE THAN +/-10% OF ORIGINAL VALUE.
2. ONLY THE ITEM DESCRIBED ON THIS DRAWING IS APPROVED BY ARDEC FOR USE IN THE APPLICATION SPECIFIED HEREON. A SUBSTITUDE ITEM SHALL NOT BE USED WITHOUT PRIOR APPROVAL BY ARDEC.
3. IDENTIFICATION OF THE "SUGGESTED SOURCE OF SUPPLY" IS NOT TO BE CONSTRUED AS A GUARANTEE OF PRESENT AND CONTINUED AVAILABILITY AS A SOURCE OF SUPPLY FOR THIS ITEM.
4. ALTERNATE SOURCES MUST BE QUALIFIED AS PART OF THE INTENDED APPLICATION TEST PROGRAM.
5. SUGGESTED SOURCE(S) OF SUPPLY:

   SPRAGUE ELECTRIC CO.
   WORLD HEADQUARTERS
   267 LOWELL RD.
   HUDSON, NH 03501

   CAGE CODE NO.56289

   12725095-1 VENDOR PART NO. 199D106X0025CE2 10Uf
   12725095-2 VENDOR PART NO. 199D107X0020FE2 100Uf

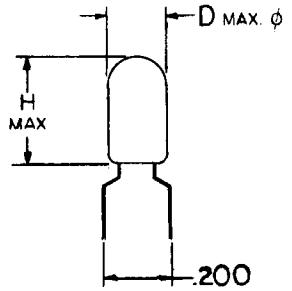

PART NUMBER	D MAX	H MAX	CAPACITANCE	LEAKAGE CURRENT	DISSIPATION FACTOR @ 25°C
12725095-1	.22	.375	10 UF	4 UA	6%
12725095-2	.38	.650	100 UF	20 UA	8%

SPECIFICATION CONTROL DRAWING

PART NO. SEE TABLE

HILTON INDUSTRIES
SARASOTA, FL 34232

		MECHANICAL PROPERTIES
		YP
		TS
		EL2
		RA
12725086	GUFS	BH
NEXT ASSY	USED ON	RH
APPLICATION		

DO NOT SCALE DRAWING
UNLESS OTHERWISE SPECIFIED DIMENSIONS ARE IN INCHES
TOLERANCES ON DECIMALS ± .010
FRACTIONS ± — ANGLES ± —
THIRD ANGLE PROJECTION

ORIGINAL DATE OF DRAWING: 880322
DRAFTSMAN: Leon Ortgoma
CHECKER: MG
ENGR: MJ
ENGR:
ENGR:
Douglas M Lamb

U.S. ARMY
ARMAMENT RESEARCH, DEVELOPMENT AND ENGINEERING CENTER
PICATINNY ARSENAL, NEW JERSEY 07806-5000

CAPACITOR, TANTALUM
DIPPED

SIZE C | CAGE CODE 19200 | 12725095
SCALE 2/1 | UNIT WT. | SHEET

SMCAR FORM 67, 1 MAR 87(TEMP), REPLACES SMCAR FORM 67, 1 JUN 86(TEMP), WHICH MAY BE USED UNTIL EXHAUSTED

DRAWING SIZE D

REVISIONS			
SYM	DESCRIPTION	DATE	APPROVAL
B	NOR M4Y2009 940706 (ECP M4Y2008 940803)	950612	TPT
C	NOR M6Y2003/970211	970326	DR
D	NOR R7A2035 980108	980213	RLV

NOTES:-

1. SPEC MIL-A-2550 AND ANSI-Y14.5 1973 APPLY.

2. REQUIREMENTS:-
   DUAL WIRE CABLE LENGTH 24.6 ± .4
   SOLDER END STRIPPED .120 ± .060
   CRIMPING END STRIPPED .155 ± .080
   PIN INSERT SHOULDERS TO BE FLUSH OR .01 BELOW FLUSH MAX.
   PULL TEST BETWEEN PIN AND BODY: 12 LB. MIN.
   PULL TEST BETWEEN CABLE AND BODY: 24 LB. MIN.

3. MATERIAL:-
   PLUG BODY: POLYCARBONATE (LEXAN 101 OR 141) COLOR WHITE.
   PINS: BRASS, ROD, HALF HARD PER ASTM B16.
   PIN PROTECTIVE FINISH: 1.2.1.4 PER MIL-STD-171.
   WIRE: CABLE, ELECTRICAL, PART NO. 9342153.

④ DIMENSIONS INDICATED CONTROL TOOL MANUFACTURE AND NEED NOT BE GAGED.

5. ONLY THE ITEM DESCRIBED ON THIS DRAWING WHEN PROCURED FROM THE VENDOR LISTED HEREON IS APPROVED BY ARDEC FOR USE IN APPLICATION SPECIFIED HEREON. A SUBSTITUTE ITEM SHALL NOT BE USED WITHOUT PRIOR APPROVAL BY ARDEC.

6. IDENTIFICATION OF THE APPROVED SOURCE HEREON IS NOT TO BE CONSTRUED AS A GUARANTEE OF PRESENT OR CONTINUED AVAILABILITY AS A SOURCE OF SUPPLY FOR THE ITEM DESCRIBED ON THE DRAWING.

7. APPROVED SOURCE OF SUPPLY:
   U.S. TERMINALS INC.
   7516 CAMARGO ROAD
   CINCINNATI, OH 45243-3147
   PART NO. C-1051-B
   CAGE CODE. NO. 12615

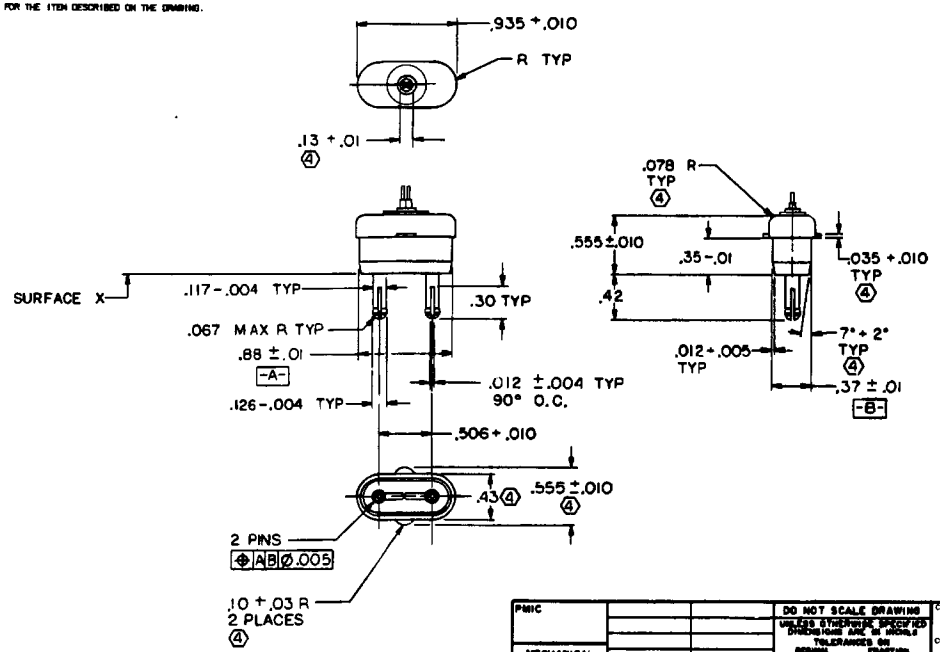

SOURCE CONTROL DRAWING

PART NO. 12944400

DISTRIBUTION STATEMENT A.
APPROVED FOR PUBLIC RELEASE,
DISTRIBUTION IS UNLIMITED

PMIC		DO NOT SCALE DRAWING UNLESS OTHERWISE SPECIFIED DIMENSIONS ARE IN INCHES TOLERANCES ON DECIMAL ± FRACTION 2 PL ± .01 3 PL ± .010	CONTRACT NUMBER / CONTRACTOR
MECHANICAL PROPERTIES		THIRD ANGLE PROJECTION	DESIGN ACTIVITY: U.S. ARMY ARMAMENT RESEARCH, AND DEVELOPMENT AND ENGINEERING CENTER PICATINNY ARSENAL, NEW JERSEY 07806-5000
YP			DRAWN BY: AJL DATE(YR-MO-DAY): 91-08
YS			CHECKER
EL			DRAWING APPROVAL
RA	12972336 IGNITER, ELECTRICAL ASSEMBLY (ALTERNATE)		DESIGN APPROVAL
BH	NEXT ASSY USED ON		PLUG, ELECTRICAL ASSEMBLY (ALTERNATE)
RH	APPLICATION		SIZE D CAGE CODE 19200 — 12944400
			SCALE 2/1 UNIT WT. SHEET

SMCAR FORM 68, 1 DEC 87(TEMP). REPLACES SMCAR FORM 68, 1 MAR 87(TEMP), WHICH MAY BE USED UNTIL EXHAUSTED

SYM	DESCRIPTION	DATE	APPROVAL
-	INC NOR D112001 91-04-16 (ECP D212022 92-10-27)	93-01-15	

NOTES:

1. APPLICABLE STANDARDS/SPECIFICATIONS:
   A. DOD-STD-00100D (AR)
   B. ANSI Y14.5M-1982

2. ONLY THE ITEMS DESCRIBED ON THIS DRAWING WHEN PROCURED FROM THE VENDOR(S) LISTED HEREON IS APPROVED BY U.S.ARMY ARMAMENT RESEARCH, DEVELOPMENT AND ENGINEERING CENTER (ARDEC), PICATINNY ARSENAL, NJ 07806-5000 FOR USE IN THE APPLICATION SPECIFIED HEREON. A SUBSTITUTE ITEM SHALL NOT BE USED WITHOUT PRIOR APPROVAL BY ARDEC.

3. IDENTIFICATION OF THE APPROVED SOURCE(S) OF SUPPLY HEREON IS NOT TO BE CONSTRUED AS A GUARANTEE OF PRESENT OR CONTINUED AVAILABILITY AS A SOURCE OF SUPPLY FOR THE ITEM DESCRIBED ON THE DRAWING.

4. REQUIREMENTS:
   A. SHELL MATERIAL: ALUMINUM ALLOY
   B. SHELL FINISH: OLIVE DRAB CHROMATE COATING OVER CADMIUM PLATING
   C. INSULATOR MATERIAL: POLYCHLOROPRENE
   D. CONTACT MATERIAL: COPPER ALLOY
   E. CONTACT FINISH: SILVER PLATE
   F. CONTACT TYPE: SOCKET
   G. NUMBER OF CONTACTS: 7
   H. SOLDER TERMINATION
   I. WIRE SIZE (MAX): 16 AWG
   J. NYLON POTTING CUP WITH THREADED ATTACHMENT RING
   K. RUBBER GASKET UNDER COUPLING NUT
   L. MATES WITH CONNECTOR MS3102E16S-1P

5. ITEM IDENTIFICATION: APPLY THE FOLLOWING MARKING TO CONTAINER IN ACCORDANCE WITH MIL-STD-130.

   19200SOCN12950960
   MFR-□□□ ← MANUFACTURER'S CAGE CODE

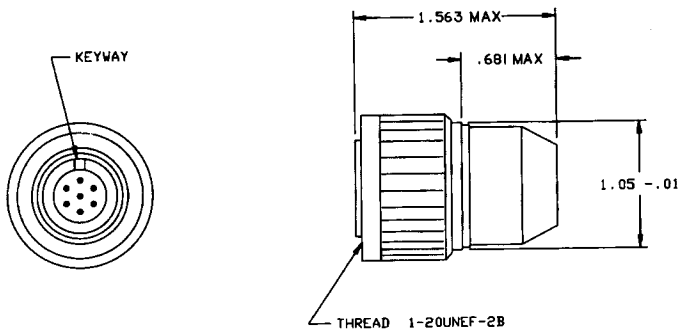

APPROVED SOURCE(S) OF SUPPLY				
PART NO.	VENDOR ADDRESS	VENDOR CAGE CODE	VENDOR PART NO.	ITEM IDENTIFICATION
19200SOCN12950960	ITT CANNON ELECTRIC 666 E. DYER ROAD SANTA ANA, CA 92702-0929	42536	CA3106ER16S-1S	19200SOCN12950960 MFR-42536

DISTRIBUTION STATEMENT A.
APPROVED FOR PUBLIC RELEASE; DISTRIBUTION IS UNLIMITED.

SOURCE CONTROL DRAWING

PART NO. 12950960

PMC			DO NOT SCALE DRAWING	CONTRACT NUMBER	DESIGN ACTIVITY U.S. ARMY ARMAMENT RESEARCH, DEVELOPMENT AND ENGINEERING CENTER PICATINNY ARSENAL, NEW JERSEY 07806-5000
MECHANICAL PROPERTIES			UNLESS OTHERWISE SPECIFIED DIMENSIONS ARE IN INCHES TOLERANCES ON DECIMAL FRACTION 2 PL ± ± 3 PL ±	CONTRACTOR	CONNECTOR, ELECTRICAL
YP			THIRD ANGLE PROJECTION	DRAWN BY GRM DATE(YR-MO-DA) 93-01-15	
YS				CHECKER ENGINEER	
EL%	12725002	GUFS		DRAWING APPROVAL	SIZE D / CAGE CODE 19200 / 12950960
RA	NEXT ASSY	USED ON		DESIGN APPROVAL	SCALE NONE / UNIT WT. / SHEET
BH	APPLICATION		MATL ENGR		
RH					

REVISIONS			
SYM	DESCRIPTION	DATE	APPROVAL
-	INC NOR D112001 91-04-16 (ECP D212022 92-10-27)	93-01-15	

NOTES:

1. APPLICABLE STANDARDS/SPECIFICATIONS:
   A. DOD-STD-00100D (AR)
   B. ANSI Y14.5M-1982

2. ONLY THE ITEMS DESCRIBED ON THIS DRAWING WHEN PROCURED FROM THE VENDOR(S) LISTED HEREON IS APPROVED BY U.S.ARMY ARMAMENT RESEARCH, DEVELOPMENT AND ENGINEERING CENTER (ARDEC), PICATINNY ARSENAL, NJ 07806-5000 FOR USE IN THE APPLICATION SPECIFIED HEREON. A SUBSTITUTE ITEM SHALL NOT BE USED WITHOUT PRIOR APPROVAL BY ARDEC.

3. IDENTIFICATION OF THE APPROVED SOURCE(S) OF SUPPLY HEREON IS NOT TO BE CONSTRUED AS A GUARANTEE OF PRESENT OR CONTINUED AVAILABILITY AS A SOURCE OF SUPPLY FOR THE ITEM DESCRIBED ON THE DRAWING.

4. REQUIREMENTS:
   A. SHELL MATERIAL: ALUMINUM ALLOY
   B. SHELL FINISH: OLIVE DRAB CHROMATE COATING OVER CADMIUM PLATING
   C. INSULATOR MATERIAL: POLYCHLOROPRENE
   D. CONTACT MATERIAL: COPPER ALLOY
   E. CONTACT FINISH: SILVER PLATE
   F. CONTACT TYPE: PIN
   G. NUMBER OF CONTACTS: 14
   H. SOLDER TERMINATION
   I. WIRE SIZE (MAX): 16 AWG
   J. NYLON POTTING CUP WITH THREADED ATTACHMENT RING
   K. RUBBER GASKET UNDER COUPLING NUT
   L. MATES WITH CONNECTOR 11784667

5. ITEM IDENTIFICATION: APPLY THE FOLLOWING MARKING TO CONTAINER IN ACCORDANCE WITH MIL-STD-130.

   19200SOCN12950961
   MFR-□ □ MANUFACTURER'S CAGE CODE

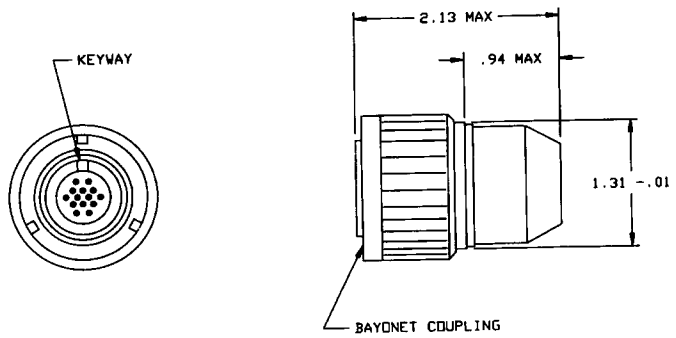

APPROVED SOURCE(S) OF SUPPLY				
PART NO.	VENDOR ADDRESS	VENDOR CAGE CODE	VENDOR PART NO.	ITEM IDENTIFICATION
19200SOCN12950961	ITT CANNON ELECTRIC 666 E. DYER ROAD SANTA ANA, CA 92702-0929	42536	CA3106ER20-27PB	19200SOCN12950961 MFR-42536

SOURCE CONTROL DRAWING

PART NO. 12950961

DISTRIBUTION STATEMENT A. APPROVED FOR PUBLIC RELEASE; DISTRIBUTION IS UNLIMITED.

PMIC		DO NOT SCALE DRAWING	CONTRACT NUMBER	DESIGN ACTIVITY U.S. ARMY ARMAMENT RESEARCH, DEVELOPMENT AND ENGINEERING CENTER PICATINNY ARSENAL, NEW JERSEY 07806-5000
MECHANICAL PROPERTIES		UNLESS OTHERWISE SPECIFIED DIMENSIONS ARE IN INCHES TOLERANCES ON DECIMAL 2 PL ± 3 PL ± FRACTION ±	CONTRACTOR	CONNECTOR, ELECTRICAL
YP TS EL2 RA BH RH	12725002 NEXT ASSY / GUFS USED ON	THIRD ANGLE PROJECTION	DRAWN BY GRM DATE(YR-MO-DA) 93-01-15	
	APPLICATION	MATL ENGR	CHECKER / ENGINEER / DRAWING APPROVAL / DESIGN APPROVAL	SIZE D CAGE CODE 19200 12950961
				SCALE NONE UNIT WT. SHEET

DRAWING SIZE C
(ARRADCOMR 70-12)

REVISIONS			
SYM	DESCRIPTION	DATE	APPROVAL
H	NOR M4Y2009 940706 ECP M4Y2008 940803	950612	TPT
J	NOR R7Y2004 971119	980108	JB

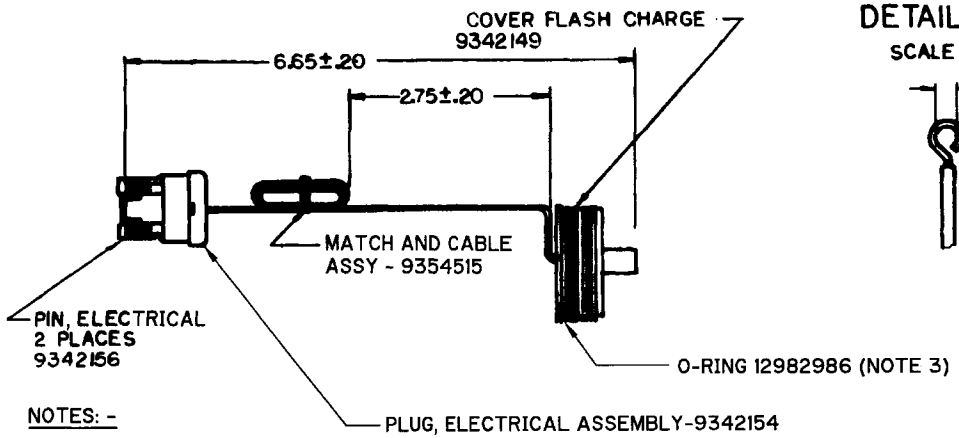

DETAIL "A"
SCALE 2/1

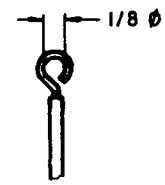

NOTES: -

1. - SPEC MIL-A-2550 AND ANSI Y14.5-1973 APPLY.
2. - INSTRUCTIONS FOR ASSEMBLY OF COMPONENTS-WHEN USING PLUG, ELECTRICAL ASSEMBLY - 9342154. MATCH AND CABLE ASSY - 9354515, PIN, ELECTRICAL - 9342156, AND COVER, FLASH CHARGE - 9342149.

   A. - SLIDE COVER, FLASH CHARGE, 9342149: OVER THE MATCH AND CABLE ASSY-8354515 UNTIL THE MATCH HEAD RESTS IN THE POCKET OF THE COVER, FLASH CHARGE

   B. - SLIDE THE PLUG, ELECTRICAL 9342154 OVER THE MATCH AND CABLE ASSY.

   C. - FORM TWO EYES ON THE STRIPPED ENDS OF THE CABLE (SEE DETAIL "A") AND SCREW THE TWO PINS, ELECTRICAL, 9342156 THROUGH THE CABLE EYES IN TO THE PLUG, ELECTRICAL (ADVISORY)

   D. - CHECK FOR ELECTRICAL RESISTANCE (REQUIREMENT 1.2 TO 1.7 OHMS

   E. - WIND UP CABLE TO DIMENSIONS SHOWN.

3. - PLACE O-RING IN SECOND GROVE FROM TOP OF COVER FLASH CHARGE-9342149.

PART NO. 9342148

DISTRIBUTION STATEMENTA.
APPROVED FOR PUBLIC RELEASE;
DISTRIBUTION IS UNLIMITED.

NEXT ASSY	USED ON
9342134	SIM, FLASH, ARTY: M21

APPLICATION

MECHANICAL PROPERTIES: YP, TS, EL2, RA, BH, RH

DO NOT SCALE DRAWING
UNLESS OTHERWISE SPECIFIED DIMENSIONS ARE IN INCHES
TOLERANCES ON DECIMALS ± ——
FRACTIONS ± —— ANGLES ± ——

ORIGINAL DATE OF DRAWING: 81-01-15
DRAFTSMAN: DETTERLE
CHECKER: GLOCKENMEIER
ENGR: ENGR: ENGR: ENGR: C-AK

U S ARMY ARMAMENT RESEARCH AND DEVELOPMENT CENTER
DOVER, NEW JERSEY 07801

IGNITER, ELECTRICAL ASSEMBLY

SIZE: C | FSCM NO. CURRENT: 19200 | 9342148

SCALE 1/1 | UNIT WT. | SHEET 1 OF 1

DRAWING SIZE C
(ARRADCOMR 70-12)

REVISIONS			
SYM	DESCRIPTION	DATE	APPROVAL
–	PRODUCTION RELEASE ERRA0Y2004	81-01-15	
A	NORA2Y 2006/82-11-24	83-02-04	
B	ERR Z9Z1198A (ECP M9Y2007 [illegible])	[illegible]	
C	ERR Z9Z1281F (ECP M9Y3019, 89-10-04)	90-08-29	
D	NOR MOY3016/901019	910225	
E	NOR M4Y2007/940525	940726	

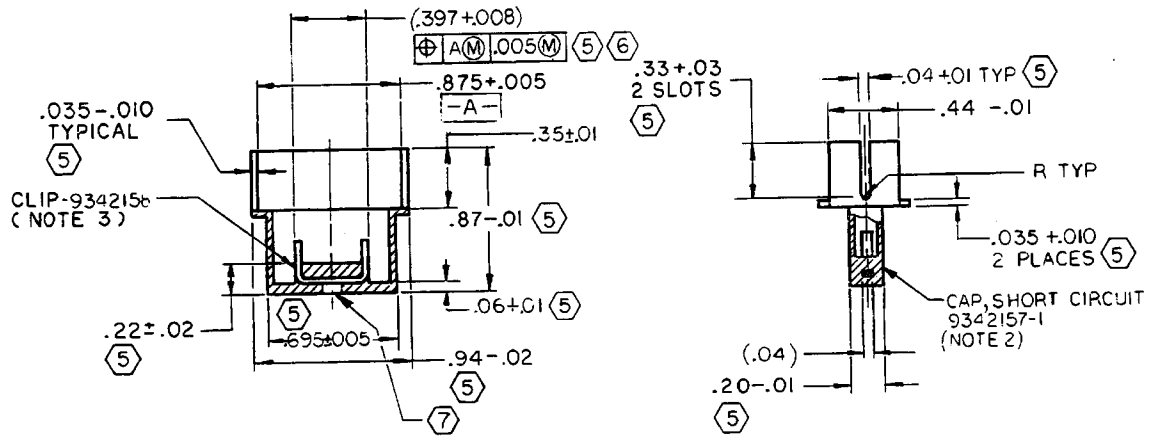

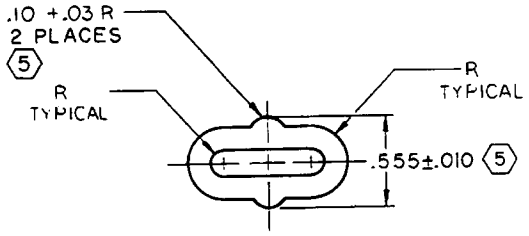

NOTES:-

1. – SPEC MIL-A-2550 AND ANSI Y14.5-1973 APPLY.
2. – MATERIAL : – POLYSTYRENE GROUP 2, CLASS 1, GRADE 2 OR 3, ASTM D-4549, COLOR WHITE NO. 37875 OF FED-STD-595.
3. CLIP-9342158 TO BE MOLDED INTO CAP.
4. 1° DRAFT ANGLE PERMITTED WITHIN TOLERANCE.

(5) DIMENSIONS INDICATED CONTROL TOOL MANUFACTURE AND NEED NOT BE GAGED.

(6) – APPLIES TO REINFORCED AREA OF CLIP.
(7) – 1/8"Ø CORE PIN HOLE PERMITTED.

PART NO. 9342157

12555037	SIM, TARGET KILL, M26
9342148	SIM, FLASH, ARTY: M21
NEXT ASSY	USED ON
APPLICATION	

MECHANICAL PROPERTIES: YP, TS, EL2, RA, BH, RH

DO NOT SCALE DRAWING
UNLESS OTHERWISE SPECIFIED DIMENSIONS ARE IN INCHES
TOLERANCES ON DECIMALS ± .010
FRACTIONS ± —— ANGLES ± ——

ORIGINAL DATE OF DRAWING 81-01-15

DRAFTSMAN	CHECKER
DIETTERLE	GLOCKENMEIER
ENGR	ENGR
ENGR	ENGR CAK

U S ARMY ARMAMENT RESEARCH AND DEVELOPMENT CENTER
DOVER, NEW JERSEY 07801

CAP, SHORT CIRCUIT

SIZE	CODE IDENT NO.	
C	19200	9342157
SCALE 2/1	UNIT WT.	SHEET 1 OF 1

DISTRIBUTION STATEMENT A.
APPROVED FOR PUBLIC RELEASE;
DISTRIBUTION IS UNLIMITED.

ARRADCOM FORM 47 AUG 77 REPLACES SARWA FORM 1040 OCT 75 WHICH MAY BE USED UNTIL EXHAUSTED

0369-01-A

DRAWING SIZE C
(ARRADCOMR 70-12)

REVISIONS			
SYM	DESCRIPTION	DATE	APPROVAL
G	NOR M4Y2009 940706 (ECP M4Y2008 940803)	950612	TPT
H	NOR M5Y2013 951114	960923	MG
J	NOR M6Y2003/970211	970326	DR

NOTES -

1- REQUIREMENTS -

A MATCH AND CABLE RESISTANCE 1 1 TO 1 6 OHMS
B CABLE LENGTH 24 6 + 7 INCHES (BEFORE SOLDERING)
C SOLDERED END STRIPPED 12 + .06
D PLUG END STRIPPED 43 + 18

2- SOLDER EXPOSED CONDUCTORS OF CABLE, ELECTRICAL - 9342153 TO SURFACE TERMINATION AREAS OF MATCH, ELECTRICAL - 9354514 PER REQUIREMENT 5, SPEC MIL-STD-454 SOLDER SN63-W-R, SPEC QQ-S-571

3- DIP MATCH, ELECTRICAL - 9354514 INTO COATING, CONDUCTIVE - 12972337 TO A DEPTH OF 3/4 INCH (NOMINAL) CAUTION MATCH MUST NOT REMAIN IN SOLUTION AS IT MAY DISSOLVE MATCH MATERIALS ALLOW TO AIR DRY FOR 24 HRS

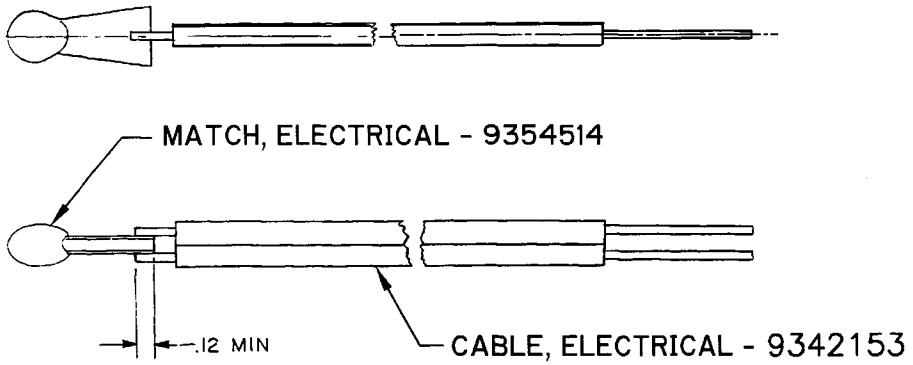

12972802	SIMULATOR, TARGET HIT, M25
9390399	M79 ELEC. MATCH IGNITER
12556037	SIM, TARGET KILL, M26
9342148	SIM, FLASH ARTY; M21
NEXT ASSY	USED ON
APPLICATION	

MECHANICAL PROPERTIES	
YP	
TS	
EL2	
RA	
BH	
RH	

DO NOT SCALE DRAWING
UNLESS OTHERWISE SPECIFIED DIMENSIONS ARE IN INCHES
TOLERANCES ON DECIMALS ±
FRACTIONS ± ANGLES ±

ORIGINAL DATE OF DRAWING 83-01-20

DRAFTSMAN | CHECKER
ENGR | ENGR
ENGR | ENGR

PART NO. 9354515

U S ARMY ARMAMENT RESEARCH AND DEVELOPMENT CENTER
DOVER, NEW JERSEY 07801

MATCH AND CABLE ASSEMBLY

SIZE C | FSCM NO. 19200 | 9354515
SCALE 4/1 | UNIT WT. | SHEET

DISTRIBUTION STATEMENT A
APPROVED FOR PUBLIC RELEASE,
DISTRIBUTION IC UNLIMITED

ARRADCOM FORM 67 AUG 77 REPLACES SARPA FORM 1040 OCT 73 WH. IS MAY BE USED UNTIL EXHAUSTED

APPLICATION		REVISIONS			
NEXT ASSY	USED ON	SYM	DESCRIPTION	DATE	APPROVAL
12725086	GUFS	–	INC NOR D9I2050 89-12-21	91-06-26	
		A	NOR D6I2005 960722	960826	FET

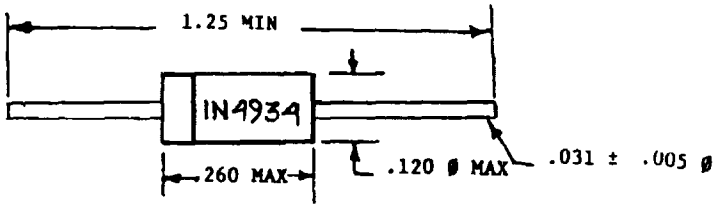

NOTES:

1. PART NUMBER 1N4934
2. CHARACTERISTICS
   A. REVERSE VOLTAGE V RRM (VOLTS) - 100
   B. FORWARD SURGE CURRENT I FSM (AMPS) - 30
   C. JUNCTION TEMPERATURE @ RATED CURRENT TA @ RATED Io (°c) - 75
   D. JUNCTION TEMPERATURE MAXIMUM TJ (MAX) (°C) - 150
   E. REVERSE RECOVERY TIME trr (us) - .2
   F. AVERAGE FORWARD CURRENT Io (AMPS) - 1.0
3. ONLY THE ITEM DESCRIBED ON THIS DRAWING IS APPROVED BY ARDEC FOR USE IN THE APPLICATION SPECIFIED HEREON. A SUBSTITUTE ITEM SHALL NOT BE USED WITHOUT PRIOR APPROVAL BY ARDEC.
4. IDENTIFICATION OF THE "APPROVED SOURCE OF SUPPLY" IS NOT TO BE CONSTRUED AS A SOURCE OF SUPPLY FOR THIS ITEM.
5. ALTERNATE SOURCES OF SUPPLY MUST BE QUALIFIED AS PART OF THE INTENDED APPLICATION TEST PROGRAM.
6. APPROVED SOURCE(S) OF SUPPLY:

   MOTOROLA SEMICONDUCTOR PRODUCTS, INC.
   PHOENIX, ARIZONA 85036
   CAGE CODE: 04713

SOURCE CONTROL DRAWING

PART NO. 9355942

ORIGINAL DATE OF DRAWING 890214		U.S. ARMY ARMAMENT RESEARCH, DEVELOPMENT AND ENGINEERING CENTER PICATINNY ARSENAL, NEW JERSEY 07806-5000		
DRAFTSMAN LP	CHECKER DNG			
ENGR	ENGR Leo	DIODE, FAST RECOVERY 1N4934		
ENGR	ENGR			
Leon Ostapowicz Douglas M. Laird		SIZE A	CURRENT CAGE CODE 19200	9355942
		SCALE	UNIT WT	SHEET

ARRADCOM FORM 65 JUN 78 REPLACES SARPA FORM 1038 OCT 75 WHICH IS OBSOLETE

APPLICATION		REVISIONS			
NEXT ASSY	USED ON	SYM	DESCRIPTION	DATE	APPROVAL
FINAL	GUFS	F	INC NOR [illegible]12001 91-04-16 (ECP D2I2022 [illegible])	93-01-21	
		F	NOR D4I4017 94-05-18	94070-	

DESCRIPTION

DEVICE CONSISTS OF:

1 EACH - FIRING ASSEMBLY, GUFS
P/N 12725001-1

1 EACH - CABLE ASSEMBLY, INPUT
P/N 12725002

NOTE:

1. SPECS MIL-F-13926 AND MIL-G-70617 APPLY.
2. FOR INSTALLATION REFER TO DRAWING NUMBER 9387660.

TABLE	
12725085	OBSOLETE DESIGN
12725085-1	FOR NEW PROCUREMENT

DISTRIBUTION STATEMENT A. APPROVED FOR PUBLIC RELEASE; DISTRIBUTION IS UNLIMITED.

SEE SEPARATE PARTS LIST - SEE TABLE

PART NO. SEE TABLE

ORIGINAL DATE OF DRAWING	U S ARMY ARMAMENT RESEARCH AND DEVELOPMENT CENTER DOVER, NEW JERSEY 07801	
84-07-05		
DRAFTSMAN TYPED	CHECKER TM	GUNFIRE SIMULATOR
ENGR	ENGR	
ENGR	ENGR	
F. Howard Richter	SIZE A / FSCM NO 19200	12725085
[signature]	SCALE — / UNIT WT	SHEET

ARRADCOM FORM 65 JUN 78 REPLACES SARPA FORM 1038 OCT 75 WHICH IS OBSOLETE

DRAWING SIZE D
(ARRADCOMM 70-121)

REVISIONS			
SYM	DESCRIPTION	DATE	APPROVAL
XO	———	———	———
—	PRODUCTION RELEASE ERR F614051	87-05-11	WM

NOTES: UNLESS OTHERWISE SPECIFIED

1. INTERPRET DRAWING PER DOD-STD-100.
2. IDENTIFICATION OF THE "SUGGESTED SOURCE(S) OF SUPPLY" HEREON IS NOT TO BE CONSTRUED AS A GUARANTEE OF PRESENT OR CONTINUED AVAILABILITY AS A SOURCE OF SUPPLY FOR THE ITEM(S).
3. CONNECTORS SHALL MEET THE REQUIREMENTS OF MIL-C-26482 AND MIL-STD-1669.
4. CONNECTORS SHALL BE SUPPLIED WITH PLASTIC PROTECTIVE DUST CAPS.
5. CONNECTORS SHALL BE LEGIBLY AND PERMANENTLY MARKED ON THE SHELL OR COUPLING RING IN ACCORDANCE WITH MIL-STD-1285.
6.

SUGGESTED SOURCE OF SUPPLY			
CONTROL NUMBER	CODE IDENT	PART NUMBER	NAME AND ADDRESS
12629880-1	77820	PT06A-8-3P(SR)	BENDIX CORP. 23185 LA CADENA DRIVE LAGUNA HILLS, CA.92653 (714) 855-4454
12629880-2		PT07A-8-3S	

△7 O-RING TO BE SUPPLIED WITH CONNECTOR.

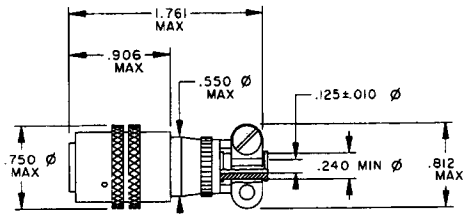

-1 PLUG

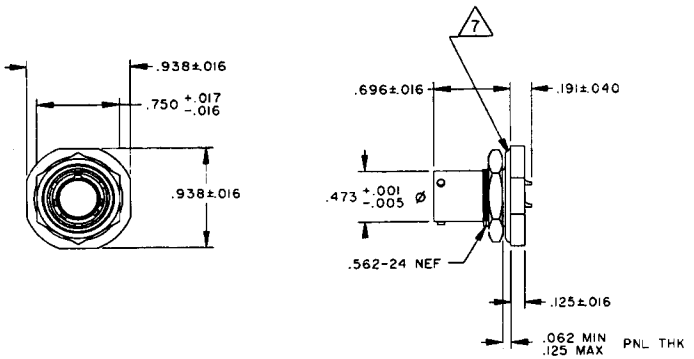

-2 RECEPTACLE

THIS DRAWING CONTAINS INFORMATION PROPRIETARY TO LORAL ELECTRO OPTICAL SYSTEMS INC. IT SHOULD NOT BE REPRODUCED, USED OR DISCLOSED TO ANYONE WITHOUT THE PRIOR WRITTEN PERMISSION OF THIS ORGANIZATION.

SPECIFICATION CONTROL DRAWING

PART NO. 12629880

12629863		MECHANICAL PROPERTIES	DO NOT SCALE DRAWING	ORIGINAL DATE OF DRAWING 86-12-02	U S ARMY ARMAMENT RESEARCH AND DEVELOPMENT COMMAND DOVER, NEW JERSEY 07801
12629861	LTID	YP	UNLESS OTHERWISE SPECIFIED DIMENSIONS ARE IN INCHES	DRAFTSMAN S.FOATI	CONNECTOR
NEXT ASSY	USED ON	TS	TOLERANCES ON DECIMALS ±	ENGR	
APPLICATION		EL2	FRACTIONS ± ANGLES ±	ENGR	SIZE D / CODE IDENT NO 19200 / 12629880
		RA	THIRD ANGLE PROJECTION		SCALE 2:1 / UNIT WT. / SHEET 1 OF 1
		BH			
		RN			

ARMAMENT RESEARCH, DEVELOPMENT & ENGINEERING CENTER

PICATINNY ARSENAL, NEW JERSEY 07806-5000

REVISION SYMBOL: C
REVISION DATE: 93/01/11
ORIGINAL DATE: 84/06/24

PARTS LIST :PL-19200-12725085-1
DOCUMENT NUMBER :A 19200-12725085
NOMENCLATURE :GUNFIRE SIMULATOR
CHANGE CONTROL NO. :D1I2001

AUTHENTICATION-

FIND NUMBER	QTY REQD	CAGE	PART/IDENTIFYING NUMBER	DRAWING SIZE	DRAWING/DOCUMENT NUMBER	NOMENCLATURE OR DOCUMENT TITLE	SUP LIST
1	1		12725002	C	12725002	CABLE ASSEMBLY, INPUT	
2	1		12725001-1	D	12725001	FIRING ASSEMBLY, GUFS	

QTY REQD: AR - AS REQUIRED, ALT - ALTERNATE, OPT - OPTIONAL, SO - SELECTION OPTIONAL

DISTRIBUTION STATEMENT A. APPROVED FOR PUBLIC RELEASE; DISTRIBUTION IS UNLIMITED

DRAWING SIZE D

NOTES:

1. SPEC MIL-F-13926, ANSI Y14.5-1973 AND QAP 12725002 APPLIES.
2. CUT AND REMOVE 1.00 OF CABLE JACKET FROM BOTH ENDS OF CABLE. REMOVE STEEL BRAID FROM CONNECTOR END P1 AND TERMINATE THE GREEN WIRE. TWIST BRAID AT CONNECTOR END P2 TO FORM LEAD AND TERMINATE THE GREEN WIRE. STRIP WIRES AT BOTH ENDS AND TIN WIRES.
3. INSTALL AND SHRINK MARKER APPROX 4.00 FROM CONNECTOR END P1.
4. DISCARD NYLON POTTING CUP WHICH IS INCLUDED WITH CONNECTORS 12950960 AND 12950961.
5. ASSEMBLE CONNECTOR P2 TO CABLE BY SOLDERING WIRE LEADS PER WIRING DIAGRAM USING LWC22(7)J9,MIL-W-76 OR INDIVIDUAL INSULATED WIRE FROM CABLE C006HDF(6/18)SJ, MIL-C-3432.
6. INSTALL JUMPER WIRE BETWEEN CONTACTS K AND M OF CONNECTOR P1.
7. ASSEMBLE CONNECTOR P1 TO CABLE BY SOLDERING WIRE LEADS PER WIRING DIAGRAM.
8. SOLDER IN ACCORDANCE WITH DRAWING 11785556, NOTE 1 USING SOLDER SN60WRP2 PER QQ-S-571.
9. CHECK ELECTRICAL CONTINUITY AND WIRING PER WIRING DIAGRAM.
10. PRIME CONNECTOR BODY POTTING RING, METAL BODY, ALL WIRE CONNECTION TERMINATIONS AND CABLE FOR A DISTANCE OF 2.00 FROM THE POTTING RING USING UNCURED LIQUID RUBBER COMPOUND AND ALLOW TO AIR DRY.
11. INSTALL ASSEMBLED CABLE INTO MOLDING FIXTURE AND MOLD USING UNCURED SYNTHETIC RUBBER, NEOPRENE, BLACK, M2AA508A13C20EAI4FI7, ASTM D2000 OR URETHANE MIL-M-24041 COLOR BLACK.
12. INSPECT AFTER MOLDING PER SQAP12725002.
13. MAXIMUM .030 MOLDING FLASH ALLOWABLE.
14. ALTERNATIVE CONFIGURATION SHOWN ON SHEET 2.

REVISIONS				
SYM	DESCRIPTION	DATE	APPROVAL
A	REDRAWN WITH CHANGE INC NOR D8I2003 88-05-09 (ECP D8I2057 88-10-18) (ECP D8I2047 88-11-15)	89-10-09	
B	INC NOR DOI3053 90-10-04	90-10-23	
C	INC NOR DOI4092 91-01-02	91-03-04	
D	INC NOR DII2001 91-04-16 (ECP DII2012 91-09-10) (ECP D2I3017 92-05-08) (ECP D2I2022 92-10-27)	93-01-13	
E	INC NOR D2Q2009 92-03-31 (ECP D2I3035 92-12-22)	93-04-14	

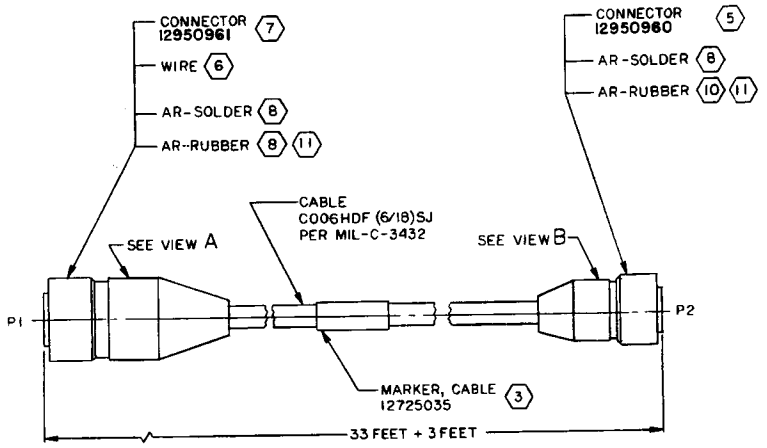

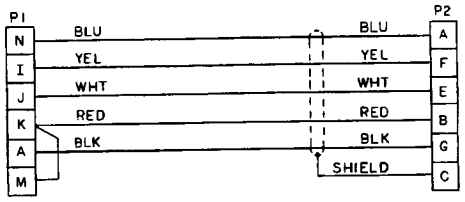

WIRING DIAGRAM

E	E	REV	REV STATUS OF SHEETS
2	1	SHEET	

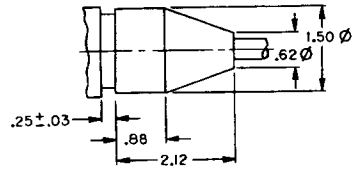

VIEW A

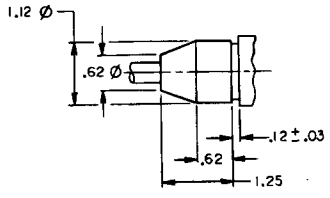

VIEW B

DISTRIBUTION STATEMENT A. APPROVED FOR PUBLIC RELEASE; DISTRIBUTION IS UNLIMITED.

		MECHANICAL PROPERTIES	DO NOT SCALE DRAWING	ORIGINAL DATE OF DRAWING	U.S. ARMY ARMAMENT RESEARCH, DEVELOPMENT AND ENGINEERING CENTER PICATINNY ARSENAL, NEW JERSEY 07806-5000	PART NO. 12725002	
		YP	UNLESS OTHERWISE SPECIFIED DIMENSIONS ARE IN INCHES	87-07-05			
		TS	TOLERANCES ON DECIMALS ± .06	DRAFTSMAN JTM	CHECKER J LAMURA	CABLE ASSY, INPUT	
		EL2	FRACTIONS ± ANGLES ±	ENGR J GENTILE	ENGR		
12725085-1	GUES	RA	THIRD ANGLE PROJECTION	ENGR HS	ENGR		
NEXT ASSY	USED ON	BH		P HOWARD ROBERTSON		SIZE D	CAGE CODE 19200	12725002
APPLICATION		RH		JOHN BEDARD		SCALE NONE	UNIT WT.	SHEET 1 OF 2

SMCAR FORM 68, 1 MAR 87(TEMP), REPLACES SMCAR FORM 68, 1 JUN 86(TEMP), WHICH MAY BE USED UNTIL EXHAUSTED

DRAWING SIZE D

REVISIONS			
SYM	DESCRIPTION	DATE	APPROVAL
A	REDRAWN WITH CHANGE INC NOR D8I2003 88-05-09 (ECP D8I2057 88-10-18) (ECP D8I2047 88-11-15)	89-10-09	
B	INC NOR D0I3053 90-10-04	90-10-23	
C	INC NOR D0I4092 91-01-02	91-03-04	
D	INC NOR D1I2001 91-04-16 (ECP D1I2012 91-09-10) (ECP D2I3017 92-05-08) (ECP D2I2022 92-10-27)	93-01-13	
E	INC NOR D2Q2009 92-03-31 (ECP D2I3035 92-12-22)	93-04-14	

NOTES:

1. SPEC MIL-F-13926, ANSI Y14.5-1973 AND QAP 12725002 APPLIES.
2. CUT AND REMOVE 1.00 OF CABLE JACKET FROM BOTH ENDS OF CABLE. REMOVE STEEL BRAID FROM CONNECTOR END P1 AND TERMINATE THE GREEN WIRE. TWIST BRAID AT CONNECTOR END P2 TO FORM LEAD AND TERMINATE THE GREEN WIRE. STRIP WIRES AT BOTH ENDS AND TIN WIRES.
3. SOLDER IN ACCORDANCE WITH DRAWING 11785556, NOTE 1 USING SOLDER, SN60WRP2 PER QQ-S-571.
4. INSTALL AND SHRINK MARKER APPROX 4.00 FROM CONNECTOR END P1. INSTALL TUBING TO BOTH ENDS OF CABLE AND INSTALL CONNECTOR END HOUSINGS TO BOTH ENDS OF CABLE.
5. INSTALL JUMPER WIRE BETWEEN CONTACTS K AND M OF CONNECTOR P1 USING WIRE, LWC22(7)J9 PER MIL-W-76 OR INDIVIDUAL INSULATED WIRE FROM CABLE C006HDF(6/18) SJ PER MIL-C-3432.
6. INSTALL WIRES OF CABLE THROUGH CONNECTOR GROMMETS OF P1 AND P2. SOLDER WIRES TO CONNECTORS PER WIRING DIAGRAM. SHRINK TUBING TO CABLE IN PLACE AND ASSEMBLE CONNECTOR END HOUSINGS TO CONNECTOR BODIES AND TIGHTEN CONNECTOR CLAMPS TO CABLE.
7. CHECK ELECTRICAL CONTINUITY AND WIRING PER WIRING DIAGRAM.
8. INSPECT AFTER ASSEMBLY PER QAP.

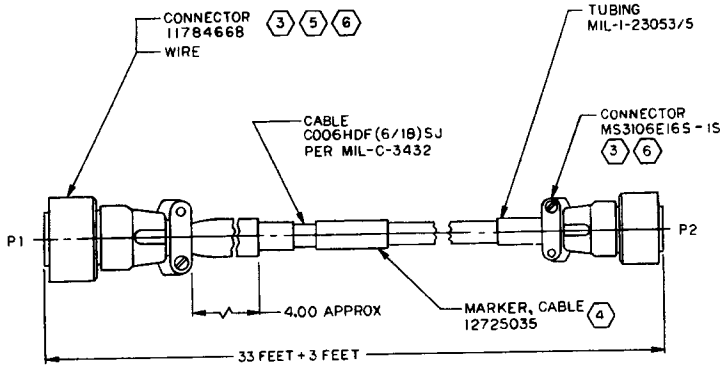

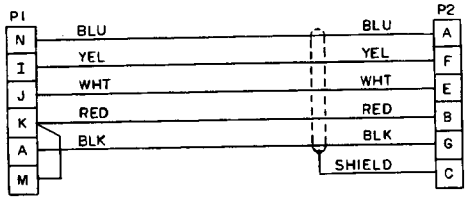

WIRING DIAGRAM

DISTRIBUTION STATEMENT A.
APPROVED FOR PUBLIC RELEASE; DISTRIBUTION IS UNLIMITED.

12725085-1	GUFS		
NEXT ASSY	USED ON		
APPLICATION			

MECHANICAL PROPERTIES: TP, TS, EL2, RA, RH, RH

DO NOT SCALE DRAWING
UNLESS OTHERWISE SPECIFIED DIMENSIONS ARE IN INCHES
TOLERANCES ON DECIMALS ± .06
FRACTIONS ± ANGLES ±
THIRD ANGLE PROJECTION

ORIGINAL DATE OF DRAWING: 87-07-05

DRAFTSMAN	JTM	CHECKER	J LAMURA
ENGR	J GENTILE	OTHER	
OTHER	MS	OTHER	
P HOWARD ROBERTSON			
JOHN BEDARD			

U.S. ARMY
ARMAMENT RESEARCH, DEVELOPMENT AND ENGINEERING CENTER
PICATINNY ARSENAL, NEW JERSEY 07806-5000

PART NO. 12725002

CABLE ASSY, INPUT

SIZE	CAGE CODE	12725002
D	19200	
SCALE NONE	UNIT WT.	SHEET 2

SMCAR FORM 68, 1 MAR 87(TEMP), REPLACES SMCAR FORM 68, 1 JUN 86(TEMP), WHICH MAY BE USED UNTIL EXHAUSTED

NOTES:

1- SPEC MIL-F-13926 AND MIL-G-70617 APPLY.

2- AT MANUFACTURERS OPTION, QAP12725085, PARAS 3.2.4A, 3.2.4B, 3.2.3.1A AND 3.2.3.1B CAN BE PERFORMED PRIOR TO INSTALLATION OF FIRING TUBE ASSY 12725004 INTO HOUSING ASSY 12725003.

3- IDENTIFICATION PLATE TO BE LOCATED IN APPROXIMATE AREA SHOWN IN ALIGNMENT WITH PRE-DRILLED HOLES. FASTEN TO FRAME USING DRIVE SCREWS MS21318-23 IN TWO LOCATIONS.

4- INSTALL ELECTRONIC CONTROL ASSY 12725014-1 INTO HOUSING FRAME 12725003-1 ROUTING OUTPUT CABLES THRU HOLE IN RESPECTIVE SIDES OF HOUSING FRAME.

5- CONNECT OUTPUT RECEPTACLE PLUGS TO SOCKET ON OUTPUT RECEPTACLE ASSY 12725006.

6- INSTALL OUTPUT RECEPTACLE ASSY INTO HOUSING FRAME, USING INDICATED HARDWARE.

REVISIONS			
DIR	DESCRIPTION	DATE	APPROVAL
—	ERR F5X5002	85-02-20	
A	INC NOR F6I2002 86-05-06	86-05-13	
B	INC NOR F6I0012 86-07-22 (ECP 07I3015 87-06-15)	89-07-14	
C	INC NOR D8I2003 88-08-09 (ECP D8I2001 88-06-09) (ECP D8I2057 88-10-18) (ECP D9I3011 89-03-12)	89-10-10	
D	INC NOR D1I2002 90-09-13 (ECP D0E2059 90-09-17)	92-07-22	
E	INC NOR D1I2001 91-04-18 (ECP D2I2020 92-10-13)	93-01-13	

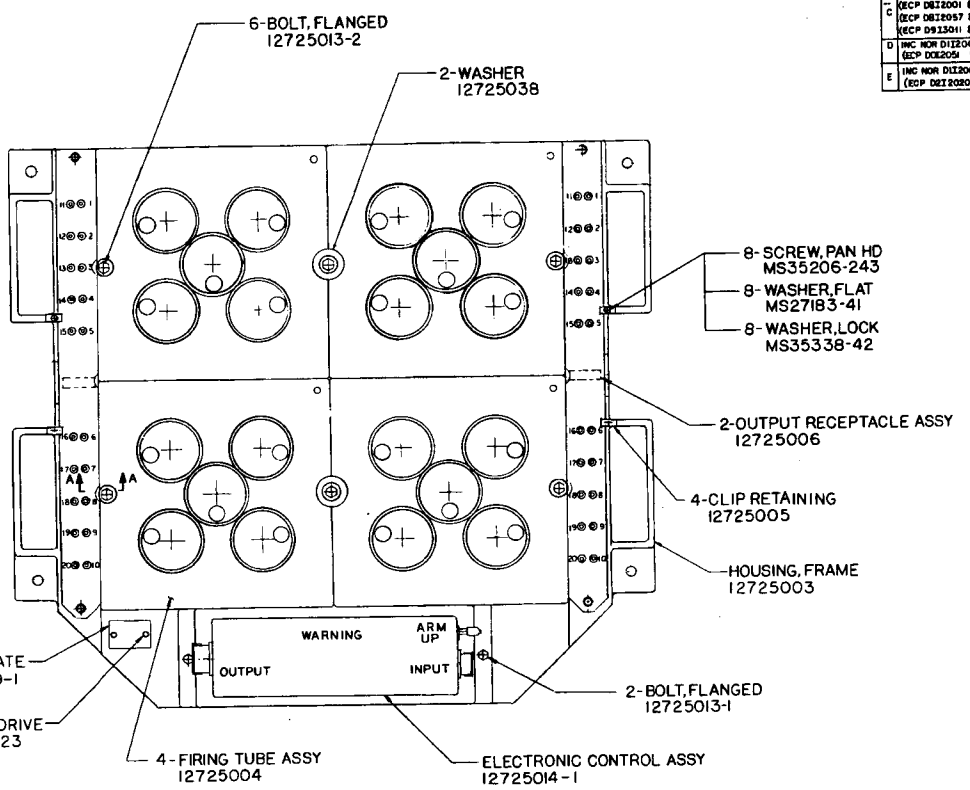

WIRING DIAGRAM

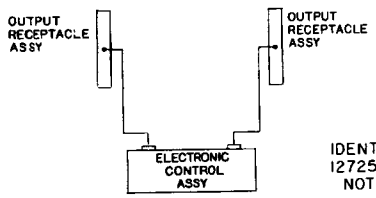

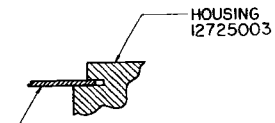

VIEW A-A

12725001-1

TABLE		NEXT ASSEMBLY
12725001	OBSOLETE DESIGN - NO CONFIGURATION SHOWN	12725085
12725001-1	FOR NEW PROCUREMENT CONFIGURATION AS SHOWN	12725085-1

SEE SEPARATE PARTS LIST: SEE TABLE

PART NO. SEE TABLE

DISTRIBUTION STATEMENT A. APPROVED FOR PUBLIC RELEASE; DISTRIBUTION IS UNLIMITED.

NEXT ASSY	SEE TABLE
USED ON	GUFS
APPLICATION	

85-07-05

FIRING ASSEMBLY, GUFS

SIZE F | CODE IDENT NO. 19200 | 12725001

SCALE 1/2 | WEIGHT | SHEET 1 OF 1

ARMAMENT RESEARCH, DEVELOPMENT & ENGINEERINING CENTER

PICATINNY ARSENAL, NEW JERSEY 07806-5000

REVISION SYMBOL: E
REVISION DATE: 93/01/11
ORIGINAL DATE: 84/04/24

PARTS LIST :PL-19200-12725001-1
DOCUMENT NUMBER :F 19200-12725001
NOMENCLATURE :FIRING ASSEMBLY, GUFS
CHANGE CONTROL NO. :DII2001

AUTHENTICATION-

FIND NUMBER	QTY REQD	CAGE	PART/IDENTIFYING NUMBER	DRAWING SIZE	DRAWING/DOCUMENT NUMBER	NOMENCLATURE OR DOCUMENT TITLE	SUP LIST
1	1	19200	12725003-1	D	12725003	HOUSING ASSEMBLY, FRAME	
2	4	19200	12725004	D	12725004	FIRING TUBE ASSEMBLY	
3	2	19200	12725006	B	12725006	OUTPUT RECEPTACLE ASSEMBLY	
4	1	19200	12725014-1	D	12725014	ELECTRONIC CONTROL ASSEMBLY	
5	4	19200	12725005	B	12725005	CLIP, RETAINING	
6	6	19200	12725013-2	A	12725013	BOLT, FLANGED (5/16-18)	
7	2	19200	12725013-1	A	12725013	BOLT, FLANGED (1/4-20)	
8	8		MS35206-243		MS35206	SCREW, PAN HD, .164-32UNC-2A X .38 LG	
9	8		MS27183-41		MS27183	WASHER, FLAT	
10	8		MS35338-42		MS35338	WASEER, FLAT NO. 8	
11	2	19200	12725038	B	12725038	WASHER	
12							
13							
14	1	19200	12725099-1	D	12725099	PLATE, IDENTIFICATION	
15	2		MS21318-23		MS21318	SCREW, DRIVE .114-7 X .38 LG	

QTY REQD: AR - AS REQUIRED, ALT - ALTERNATE, OPT - OPTIONAL, SO - SELECTION OPTIONAL

DISTRIBUTION STATEMENT A. APPROVED FOR PUBLIC RELEASE; DISTRIBUTION IS UNLIMITED

DRAWING SIZE F

REVISIONS			
SYM	DESCRIPTION	DATE	APPROVAL
—	ERR F5X5002	850220	—
A	INC NOR F5I2003C2 86-07-22	89-04-10	[illegible]
B	INC NOR F6I0012 86-07-22 (ECP D7I3004 87-04-07)	89-07-14	[illegible]
C	INC NOR D8I2003 88-05-09 (ECP D8I2001 88-05-09) (ECP D8I2055 88-10-18) (ECP D9I3011 89-03-12)	89-10-19	[illegible]
D	INC NOR D0I2070 90-12-20	91-03-28	[illegible]
E	INC NOR D1I2001 91-04-16 (ECP D2I3010 92-03-31) (ECP D2I3018 92-05-08) (ECP D2I2020 92-10-13)	93-01-09	[illegible]

NOTES:-

1- SPEC MIL-F-13926, ANSI Y14.5-1973 AND QAP 12725014-1.

2- CONNECT P1 AND P2 FROM HOUSING ASSEMBLY 12725026-1 TO CCA 12725086 J1 AND J2.

3- INSTALL GASKET 12725031 INTO GROOVE OF HOUSING 12725026-1.

4- INSTALL CCA 12725086 INTO HOUSING 12725026-1.

5- CONNECT P3 AND P4 FROM CONTROL PANEL ASSEMBLY 12725015-1 TO J3 AND J4 OF CCA 12725086.

6- INSTALL CONTROL PANEL ASSEMBLY 12725015-1 TO HOUSING ASSEMBLY 12725026-1 WITH GASKET IN PLACE AND TIGHTEN SCREWS IN SEQUENCE SHOWN. TORQUE TO 10 TO 20 INCH POUNDS EACH.

7-

8-

9- PERFORMANCE CHARACTERISTICS PER PARAGRAPH 3.3 OF MIL-C-70618 APPLY.

10- CLEAN SURFACE OF CONTROL PANEL ASSEMBLY 12725015-1 WITH ALCOHOL OR EQUIVALENT SOLVENT. INSTALL IDENTIFICATION PLATE IN APPROXIMATE AREA SHOWN BY APPLYING PRESSURE TO ADHESIVE BACKED PLATE. LOCATE APPROXIMATELY ON CASTING CENTERLINE.

11- AFTER ASSEMBLY, PURGE AND PRESSURIZE ELECTRONIC CONTROL ASSEMBLY PER THE FOLLOWING PROCEDURE:
   A. REMOVE SCREW MS3212-32 FROM BOTTOM HALF OF HOUSING.
   B. APPLY PRESSURIZED (1-2 PSI) NITROGEN TO VALVE ASSEMBLY.
   C. ALLOW AIR TO FLOW OUT THROUGH HOLE FOR APPROXIMATELY 30 SEC., THEN REPLACE SCREW WITH AIR FLOWING AND TIGHTEN UNTIL SEALED.
   D. AFTER ASSEMBLY IS PRESSURIZED TO 1-2 PSI, REMOVE NITROGEN SUPPLY FROM VALVE ASSEMBLY AND INSTALL PROTECTIVE CAP.

12- ELECTROSTATIC DISCHARGE CONTROL PROGRAM FOR PROTECTION OF ELECTRICAL AND ELECTRONIC PARTS, ASSEMBLIES AND EQUIPMENT SHALL BE IN ACCORDANCE WITH MIL-STD-1686 CLASS I AND MIL-HDBK-263 AS APPLICABLE FOR HANDLING AT CIRCUIT CARD ASSEMBLY 12725086.

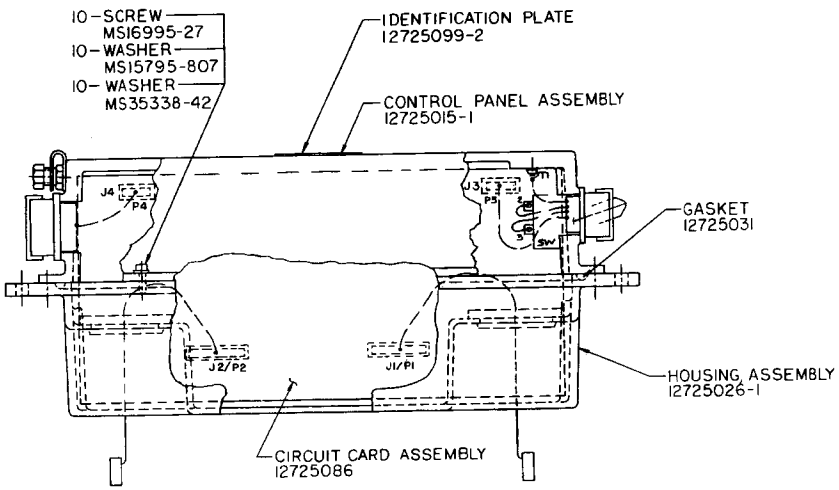

TORQUING SEQUENCE NOTE 6

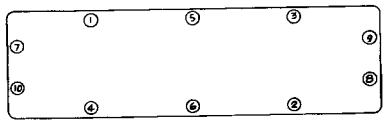

12725014-1

TABLE		NEXT ASSEMBLY
12725014	OBSOLETE DESIGN NO CONFIGURATION SHOW	12725001
12725014-1	FOR NEW PROCUREMENT CONFIGURATION AS SHOWN	12725001-1

DISTRIBUTION STATEMENT A. APPROVED FOR PUBLIC RELEASE; DISTRIBUTION IS UNLIMITED.

PART NO. SEE TABLE

SEE TABLE	GUFS-RETS	MECHANICAL PROPERTIES	DO NOT SCALE DRAWING
NEXT ASSY	USED ON		UNLESS OTHERWISE SPECIFIED DIMENSIONS ARE IN INCHES
APPLICATION			TOLERANCES ON DECIMALS ± FRACTIONS ± ANGLES ±
			THIRD ANGLE PROJECTION

ORIGINAL DATE OF DRAWING 84-07-05

DRAFTSMAN J. MEDONALD — CHECKED A. LAMINA

ENGR J. GENTILE — ENGR J. GENTILE

ENGR HS

P. HOWARD ROBERTSON

JOHN BEDARD

U.S. ARMY ARMAMENT RESEARCH, DEVELOPMENT AND ENGINEERING CENTER PICATINNY ARSENAL, NEW JERSEY 07806-5000

ELECTRONIC CONTROL ASSEMBLY

SIZE F — CAGE CODE 19200 — 12725014

SCALE 1/1 — UNIT WT. — SHEET

SMCAR FORM 69, 1 JUL 87(TEMP) REPLACES SMCAR FORM 69, 1 JUN 86(TEMP) WHICH IS OBSOLETE