DRAWING SIZE C

REVISIONS			
SYM	DESCRIPTION	DATE	APPROVAL
—	PRODUCT BASELINE NOR D8I2003 88-05-09 (ECP D8I2058 88-1018) (ECP D8I2069 89-01-25)	89-09-26	

NOTES:

1. PERFORMANCE --
   - A. POWER RATING: 1 WATT @ 70°C
   - B. DERATED TO ZERO LOAD AT - 200°C
   - C. MAXIMUM WORKING VOLTAGE - 500 V
   - D. OPERATING TEMPERATURE RANGE - -55°C to +200°C
   - E. RESISTANCE TOLERANCE - 5%
   - F. DIELECTRIC WITHSTANDING VOLTAGE - 700 VRMS
   - G. TEMPERATURE COEFFICIENT - 200 PPM/°C
   - H. FAILURE RATE (1000 HRS) - 10^{-3}
2. ONLY THE ITEM DESCRIBED ON THIS DRAWING IS APPROVED BY ARDEC FOR USE IN THE APPLICATION SPECIFIED HEREON. A SUBSTITUTE ITEM SHALL NOT BE USED WITHOUT PRIOR APPROVAL BY ARDEC.
3. IDENTIFICATION OF THE "SUGGESTED SOURCE OF SUPPLY" IS NOT TO BE CONSTRUED AS A GUARANTEE OF PRESENT AND CONTINUED AVAILABILITY AS A SOURCE OF SUPPLY FOR THIS ITEM.
4. ALTERNATE SOURCES OF SUPPLY MUST BE QUALIFIED AS PART OF THE INTENDED APPLICATION TEST PROGRAM.
5. SUGGESTED SOURCE(S) OF SUPPLY:

   KOA SPEER ELECTRONICS, INC.
   BRADFORD, PA. 16701

   VENDOR TYPE DESIGNATION: RSS

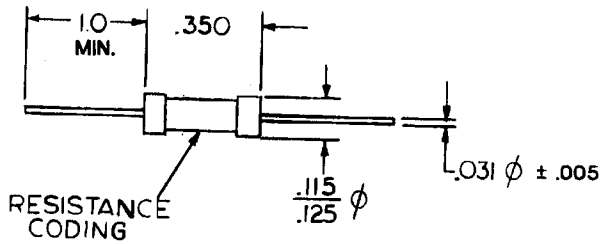

PART NUMBER	RESISTANCE VALUE	VENDOR PART NO.
12725098-1	.68 OHM	RSS -0068
12725098-2	10 OHM	RSS -1000

SPECIFICATION CONTROL DRAWING

PART NO. SEE TABLE

12725086	GUFS
NEXT ASSY	USED ON
APPLICATION	

MECHANICAL PROPERTIES: YP, TS, EL2, RA, BH, RH

DO NOT SCALE DRAWING
UNLESS OTHERWISE SPECIFIED DIMENSIONS ARE IN INCHES
TOLERANCES ON DECIMALS ± .010
FRACTIONS ± — ANGLES ± —
THIRD ANGLE PROJECTION

ORIGINAL DATE OF DRAWING: 880322
DRAFTSMAN: TZ — CHECKER: [illegible]
ENGR: [illegible] — ENGR:
ENGR: [illegible] — ENGR:
Leon F Ortogoring
Douglas M Land

U.S. ARMY
ARMAMENT RESEARCH, DEVELOPMENT AND ENGINEERING CENTER
PICATINNY ARSENAL, NEW JERSEY 07806-5000

RESISTOR, METAL OXIDE FILM

SIZE C — CAGE CODE 19200 — 12725098
SCALE 2/1 — UNIT WT. — SHEET

SMCAR FORM 67, 1 MAR 87(TEMP), REPLACES SMCAR FORM 67, 1 JUN 86(TEMP), WHICH MAY BE USED UNTIL EXHAUSTED

DRAWING SIZE C
(ARRADCOMR 70-12)

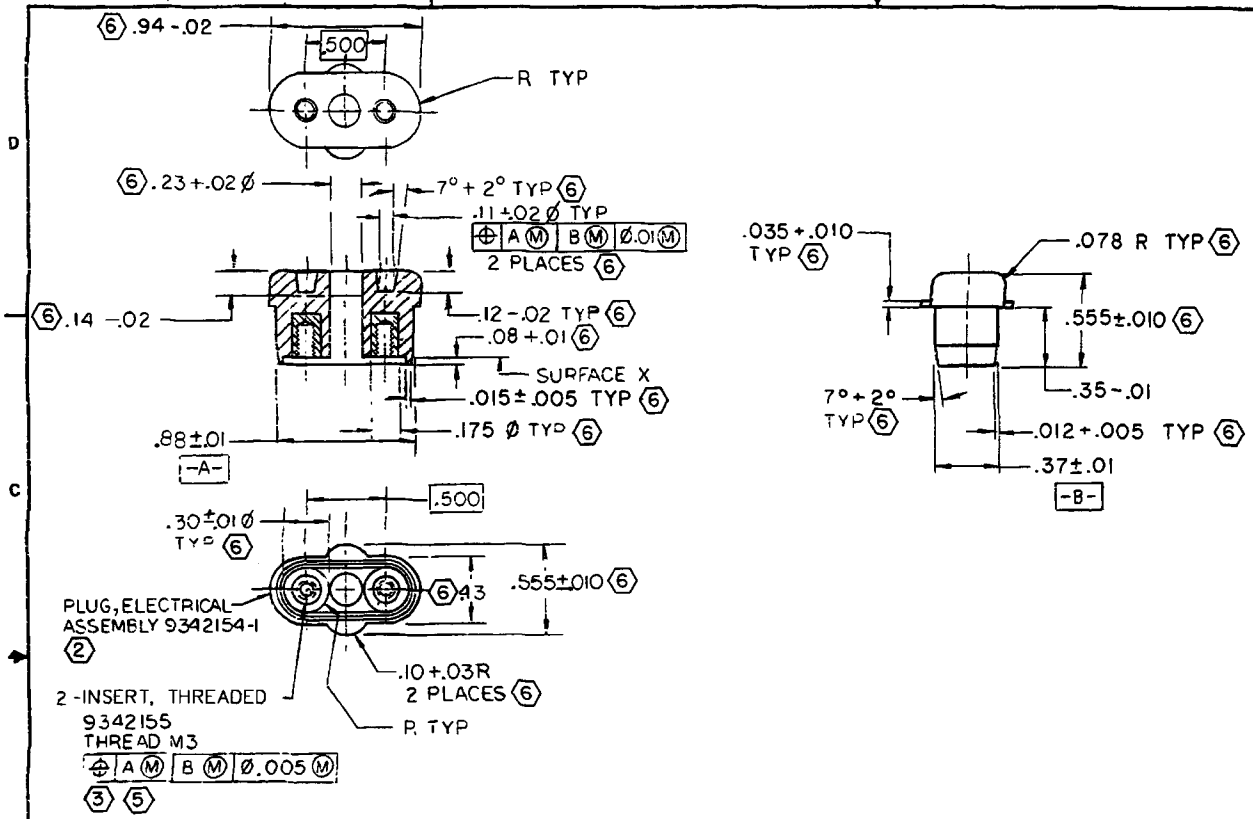

REVISIONS			
SYM	DESCRIPTION	DATE	APPROVAL
—	PRODUCTION RELEASE ERR A0Y2004	81-01-15	
A	NOR A2Y 2006/82-11-24	83-0204	
B	NOR A5Y3012/850219	850524	
C	ERR Z9Z1198A (ECP M9Y2007 890-00)	890326	
D	ERR Z9Z1281F (ECP M9Y3019, 89-10-04)	90-08-29	
E	NOR M0Y3016/901019	910225	EJS
F	NOR M4Y2007/940525	940726	
G	NOR M5Y2013 951114	960923	MG
H	NOR M6Y2003/970211	970326	DR

NOTES: –

1. – SPEC MIL-A-2550 AND ANSI Y14.5-1982 APPLY.
(2) – MATERIAL: – POLYSTYRENE, GROUP 2, CLASS 1, GRADE 2 OR 3, ASTM D-4549, COLOR WHITE NO. 37875 OF FED-STD-595.
(3) – 2 EACH INSERTS, THREADED – 9342155 TO BE MOLDED INTO ELECTRICAL PLUG AND TO BE FLUSH OR .02 BELOW FLUSH MAX OF SURFACE X.
4. – 1° DRAFT ANGLE PERMITTED WITHIN TOLERANCE.
(5) ALTERNATIVE: MOLD PLUG WITHOUT INSERTS AND THEN ULTRASONICALLY SEAL INSERTS IN PLACE AFTER MOLDING FOR U.S. MANUFACTURE.
(6) – DIMENSIONS INDICATED CONTROL TOOL MANUFACTURER AND NEED NOT BE GAGED

PART NO. 9342154

12972802	SIMULATOR, TARGET HIT, M25		
12556037	SIM, TARGET KILL, M26		
9342148	SIM, FLASH, ARTY: M21		
NEXT ASSY	USED ON		
APPLICATION			

MECHANICAL PROPERTIES: YP, TS, EL2, RA, BH, RH

DO NOT SCALE DRAWING
UNLESS OTHERWISE SPECIFIED DIMENSIONS ARE IN INCHES
TOLERANCES ON DECIMALS ± .010
FRACTIONS ± — ANGLES ± .5°

ORIGINAL DATE OF DRAWING 81-01-15
DRAFTSMAN DIETTERLE | CHECKER GLOCKENMEIER
ENGR | ENGR
ENGR | ENGR

U S ARMY ARMAMENT RESEARCH AND DEVELOPMENT CENTER
DOVER, NEW JERSEY 07801

PLUG, ELECTRICAL ASSEMBLY

SIZE C | FSCM NO 19200 | 9342154
SCALE 2/1 | UNIT WT. | SHEET 1 OF 1

DISTRIBUTION STATEMENT A
APPROVED FOR PUBLIC RELEASE.
DISTRIBUTION IS UNLIMITED.

ARRADCOM FORM 67 AUG 77 REPLACES SARPA FORM 1040 OCT 75 WHICH MAY BE USED UNTIL EXHAUSTED

DRAWING SIZE B
(ARRADCOMR 70-12)

REVISIONS			
SYM	DESCRIPTION	DATE	APPROVAL
—	PRODUCTION RELEASE ERRAOY 2004	81-01-15	
A	NOR A2Y 2006/82-11-24	830204	
B	NOR A3T3023/83-12-21	84-11-30	
C	ERR Z9Z1281F (ECP M9Y3019, 89-10-04)	90-08-29	
D	NOR MIY 3033 /910619	910926	AJL
E	NOR M2Y2011/920421	920519	GHS
F	NOR M4Y2007/940525	940726	GHS
G	NOR M5Y2013 951114	960923	MG

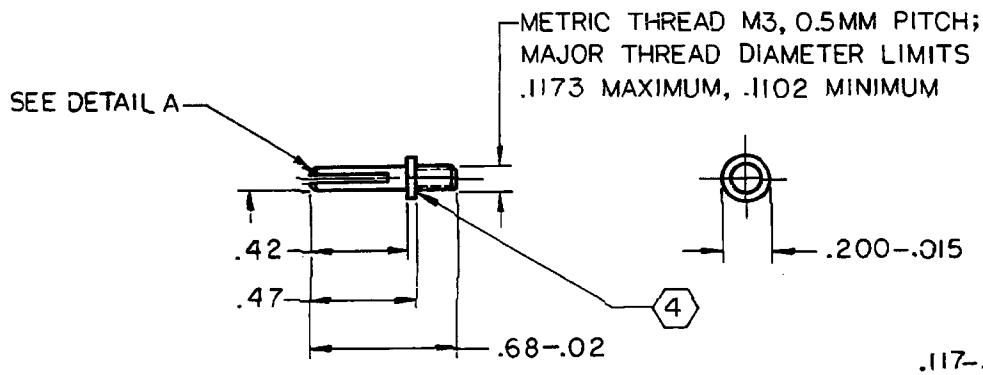

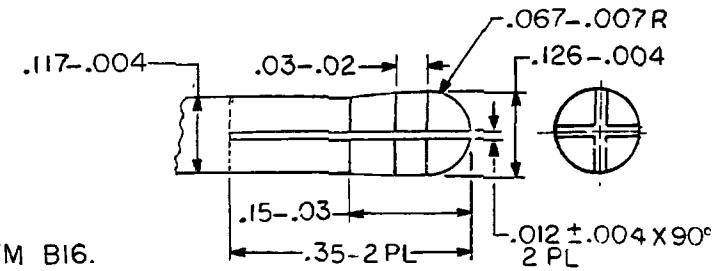

DETAIL A
NO SCALE

NOTES:-

1.-SPEC MIL-A-2550 AND ANSI Y14.5-1973 APPLY.
2.-MATERIAL BRASS, ROD, TEMPER H02 (HALF HARD), ASTM B16.
3.-PROTECTIVE FINISH:-FINISH NO. 1.4.1.4 OF MIL-STD-171.
(4) THREAD RELIEF, 02 +.01 WIDE
5 USED ONLY WITH PLUG, ELECTRICAL ASSEMBLY-9342154.

DISTRIBUTION STATEMENT A
APPROVED FOR PUBLIC RELEASE. DISTRIBUTION IS UNLIMITED

PART NO. 9342156

NEXT ASSY	USED ON
12972802	SIMULATOR, TARGET HIT, M25
12556037	SIM, TARGET KILL, M26
9342148	SIM, FLASH, ARTY: M21

APPLICATION

MECHANICAL PROPERTIES: YP, TS, EL2, RA, BH, RH

DO NOT SCALE DRAWING
UNLESS OTHERWISE SPECIFIED DIMENSIONS ARE IN INCHES
TOLERANCES ON DECIMALS ± .010
FRACTIONS ± —— ANGLES ± ——

ORIGINAL DATE OF DRAWING 81-01-15
DRAFTSMAN DIETTERLE | CHECKER GLOCKENMEIER
ENGR | ENGR
ENGR | ENGR CAK

U S ARMY ARMAMENT RESEARCH AND DEVELOPMENT CENTER
DOVER, NEW JERSEY 07801

PIN, ELECTRICAL

SIZE	FSCM NO	
B	19200	9342156
SCALE 2/1	UNIT WT	SHEET 1 OF 1

ARRADCOM FORM 66 AUG 77 REPLACES SARPA FORM 1039 OCT 75 WHICH MAY BE USED UNTIL EXHAUSTED