ATTACHMENT 011

DRAWING SIZE D (AREADCOMR 79-12)

REVISIONS			
SYM	DESCRIPTION	DATE	APPROVAL
F	INC NOR DØI2053 90-09-23	91-10-14	
G	NOR D213023 92-07-21	93-05-03	
H	NOR H719450 970418	970718	HJS

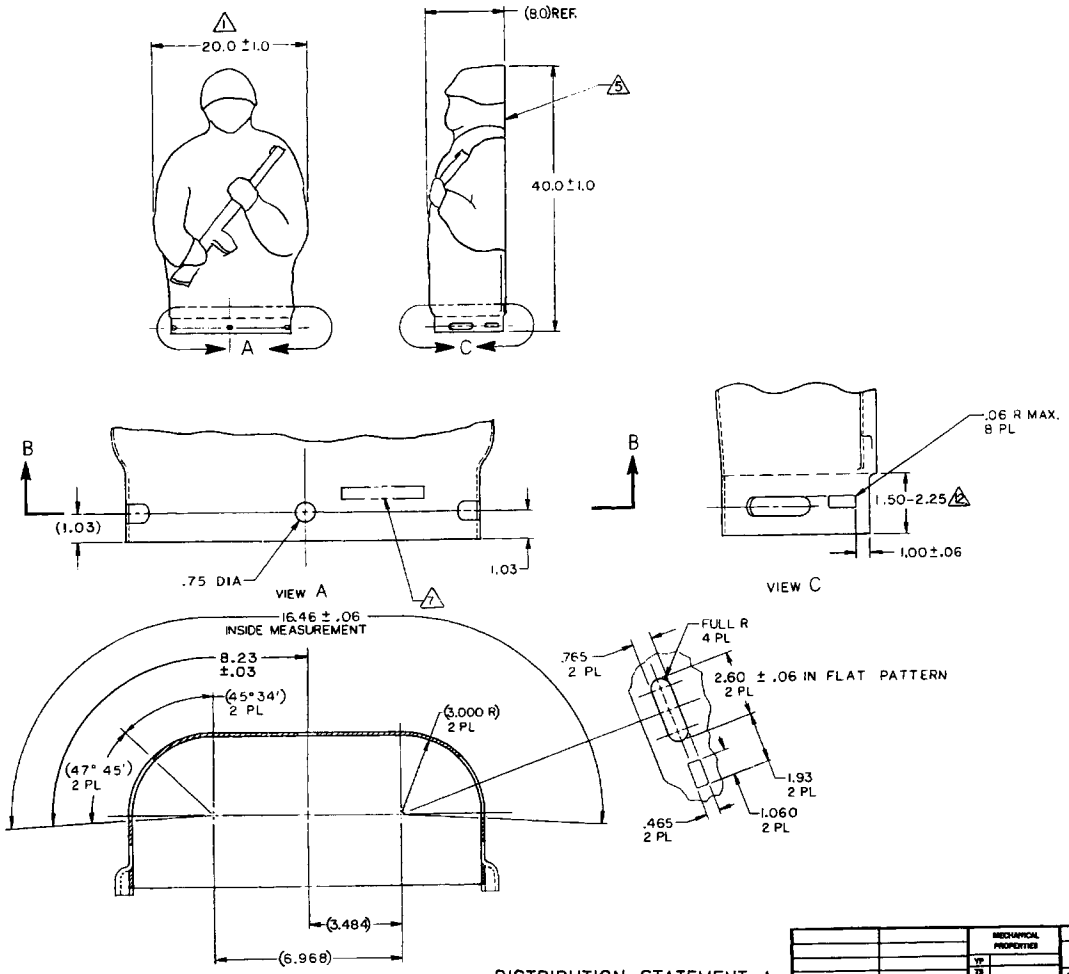

NOTES:

1. 20.0 INCH MOLD DIMENSION IS AT WIDEST POINT OF TARGET.
2. TARGET COLORATION REQUIREMENT: PIGMENTED, COLOR GREEN, 34108 PER FED-STD-595.
3.
4.
5. MINIMUM THICKNESS AT NARROWEST NECK CONTOUR SHALL BE .06 INCHES AT TRIM EDGE.
6. QAP 11829332 APPLIES TO THIS DRAWING.
7. IDENTIFY PART PER MIL-STD-130 WITH PART NO. 19200-11829332. LOCATE APPROXIMATELY AS SHOWN.
8. A GFE TARGET SHALL DICTATE SHAPE OF TOPOGRAPHY.
9. MATERIAL: PER SPECIFICATION CONTROL DRAWING 9363146.
10. SPECS MIL-F-13926 AND ANSI Y14.5-1973 APPLY.
11.
12. MATERIAL THICKNESS IN THIS REGION AROUND THE BASE SHALL BE .085 ±.020 THICK AFTER FORMING.
13.

DISTRIBUTION STATEMENT A. APPROVED FOR PUBLIC RELEASE; DISTRIBUTION IS UNLIMITED.

NEXT ASSY	USED ON
	TRETS
APPLICATION	

MECHANICAL PROPERTIES: YP, TS, ELE, RA, BH, RH

DO NOT SCALE DRAWING
UNLESS OTHERWISE SPECIFIED DIMENSIONS ARE IN INCHES
TOLERANCES ON DECIMALS ± .015
FRACTIONS ± ——— ANGLES ± 0° 30'
MATERIAL: 9

ORIGINAL DATE OF DRAWING 80-01-16
DRAFTSMAN E. Schaub
CHECKED
ENGR
ENGR
ENGR

U S ARMY ARMAMENT RESEARCH AND DEVELOPMENT CENTER DOVER, NEW JERSEY 07801

PART NO. 11829332

3-D TARGET

SIZE D | CODE IDENT NO. 19200 | 11829332

SCALE NONE | UNIT WT. | SHEET 1 OF 1

DRAWING SIZE F

REVISIONS				
ZONE	LTR	DESCRIPTION	DATE (YR MO DA)	APPROVED
	-	PRODUCT BASELINE ERR D314019 (ECP D3Q2025 931216)	940502	RR
	A	NOR D6I3020/960918	961010	DR

NOTES:

1. APPLICABLE STANDARDS/SPECIFICATIONS:
   A. DOD-STD-00100D (AR)
   B. ANSI Y 14.5M-1982
2. MATERIAL: IAW SPECIFICATION CONTROL DRAWING 9363146.
3. MINIMUM THICKNESS AT NARROWEST NECK CONTOUR SHALL BE .06 INCHES AT TRIM EDGE.
4. MATERIAL THICKNESS IN THIS REGION AROUND THE BASE SHALL BE .085 ± .020 THICK AFTER FORMING.
5. MARKING/COLORATION REQUIREMENTS.
   UNIFORM: PIGMENTED, COLOR GREEN, 34108 IAW FED-STD-595.
   FACE: COATING, ALIPHATIC POLYURETHANE MIL-C-46168, COLOR ORANGE NO. 32630 IAW FED-STD-595.
6. ADHESION: PAINT APPLICATION SHALL REQUIRE A SURFACE TREATMENT PER MIL-HDBK-691B, PARA. 5.3.5.2.2.17. TEST FOR PAINT ADHESION IAW ASTM D3359, METHOD B. TOUCH-UP OF PAINT ADHESION TEST AREA IS PERMISSIBLE.
7. SHAPE AND TOPOGRAPHY CONTROLLED BY PROCURRING ACTIVITY. MOLDS MANUFACTURED FROM 1/1 DRAWING.
8. ITEM IDENTIFICATION: IAW MIL-STD-130, MOLDED IN CHARACTERS. LOCATE APPROX AS SHOWN.

   19200-11829647
   MFR- [ ] MANUFACTURER'S CAGE CODE

9. MIL-F-13926 APPLIES EXCEPT AS OTHERWISE STATED ON THE DRAWING.
10. QAP 11829647 APPLIES.

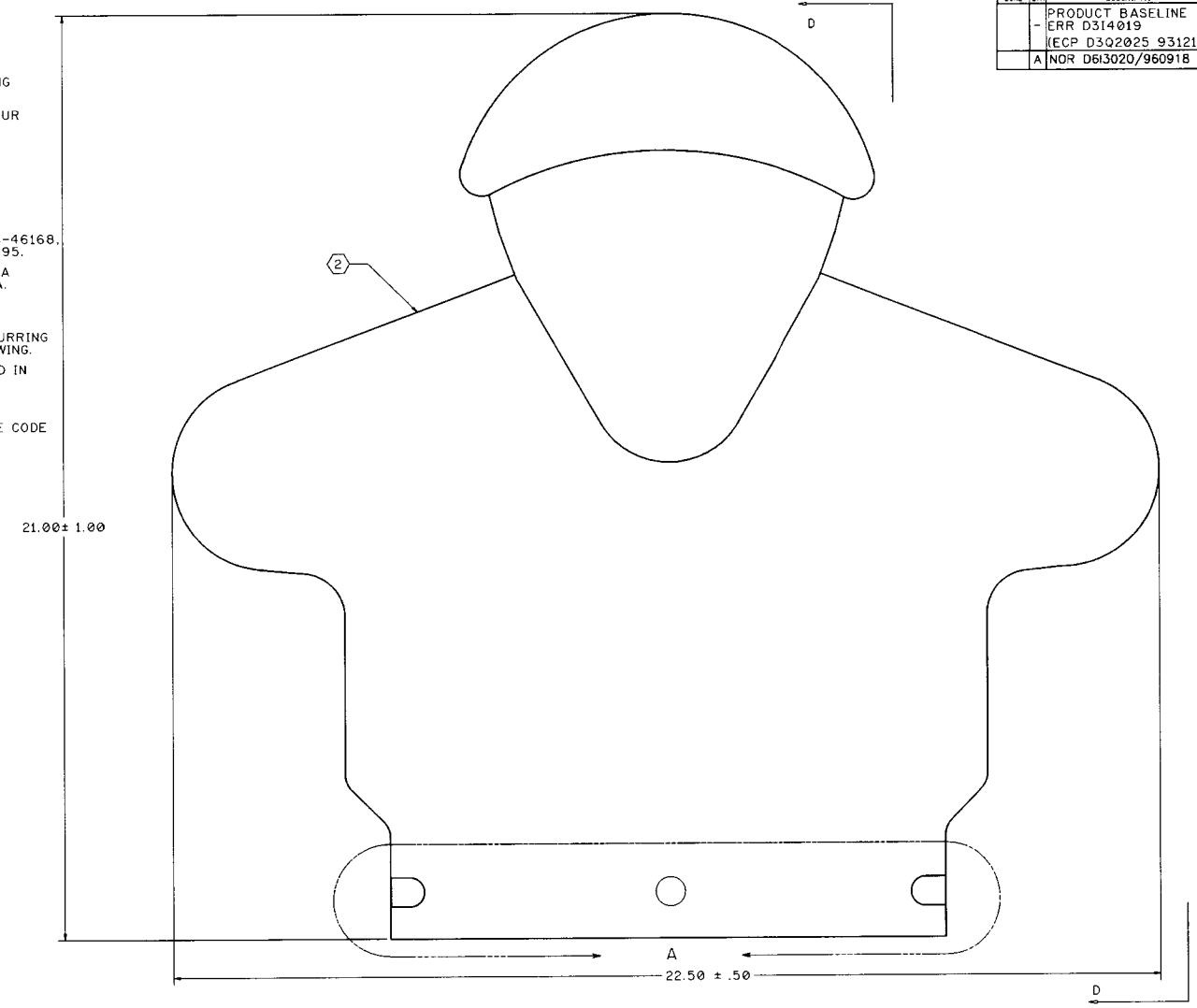

PART NO. 11829647

PMIC			DO NOT SCALE DRAWING	CONTRACT NUMBER	DESIGN ACTIVITY U.S. ARMY ARMAMENT RESEARCH, DEVELOPMENT AND ENGINEERING CENTER PICATINNY ARSENAL, NEW JERSEY 07806-5000
MECHANICAL PROPERTIES			UNLESS OTHERWISE SPECIFIED DIMENSIONS ARE IN INCHES TOLERANCES ON DECIMAL 2 PL ± .03 3 PL ± .015 FRACTION ±0° 30'	CONTRACTOR	TARGET, 3-D
YP			THIRD ANGLE PROJECTION	DRAWN BY R.C.R. DATE(YR-MO-DA) 94-01-04	
TS				CHECKER / ENGINEER	
EL2				DRAWING APPROVAL	SIZE F / CAGE CODE 19200 / 11829647
RA					
BH					
RH			MATL ENGR / CADDS REV	DESIGN APPROVAL	SCALE 1/1 / UNIT WT. / SHEET 1 OF 2

A	A
SH 2	SH 1
REV STATUS OF SHEETS	

NEXT ASSY	USED ON
APPLICATION	

DISTRIBUTION STATEMENT A
APPOVED FOR PUBLIC RELEASE:
DISTRIBUTION IS UNLIMTED.

SMCAR FORM 69, 1 DEC 87(TEMP) REPLACES SMCAR FORM 69, 1 JUL 87(TEMP) WHICH MAY BE USED UNTIL EXHAUSTED

DRAWING SIZE F

REVISIONS				
ZONE	LTR	DESCRIPTION	DATE (YR MO DA)	APPROVED
	-	PRODUCT BASELINE ERR D314019 (ECP D302025 931216)	940502	RR

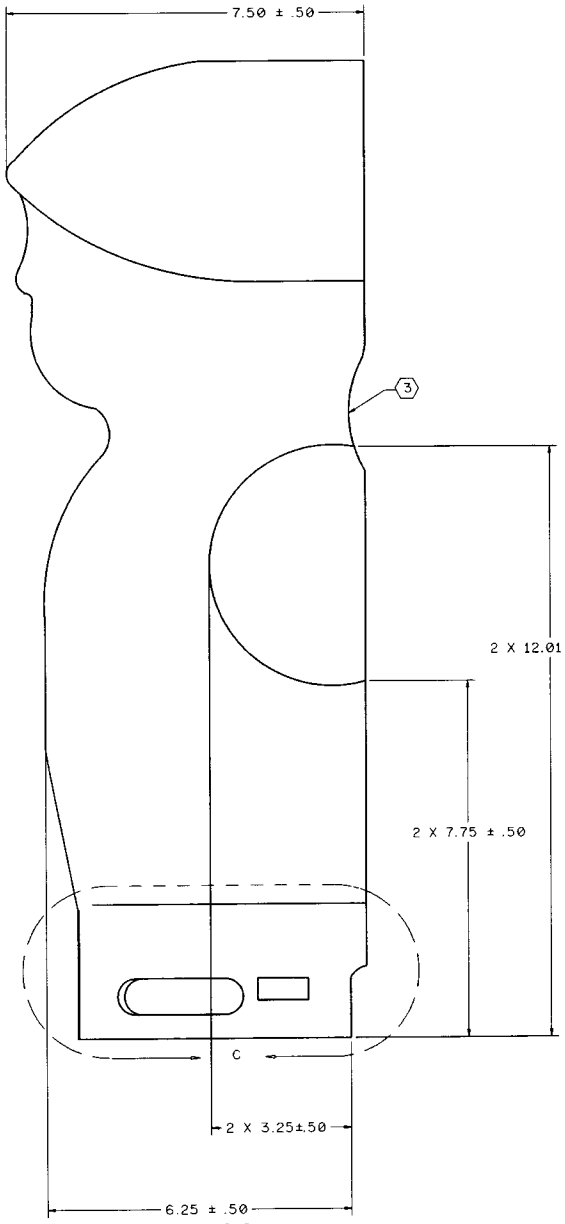

VIEW D-D

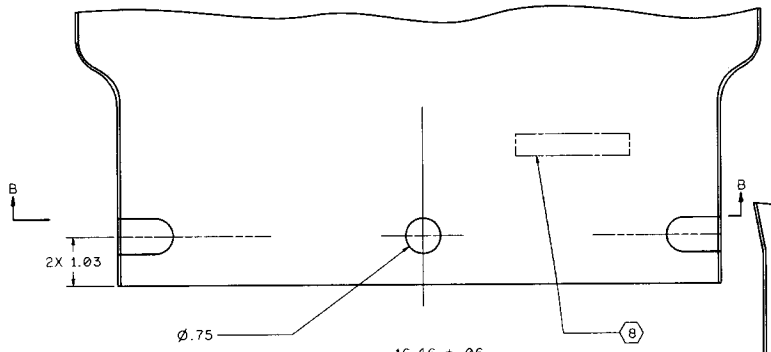

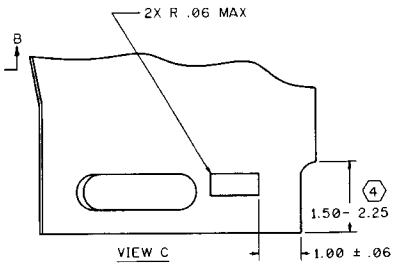

VIEW C

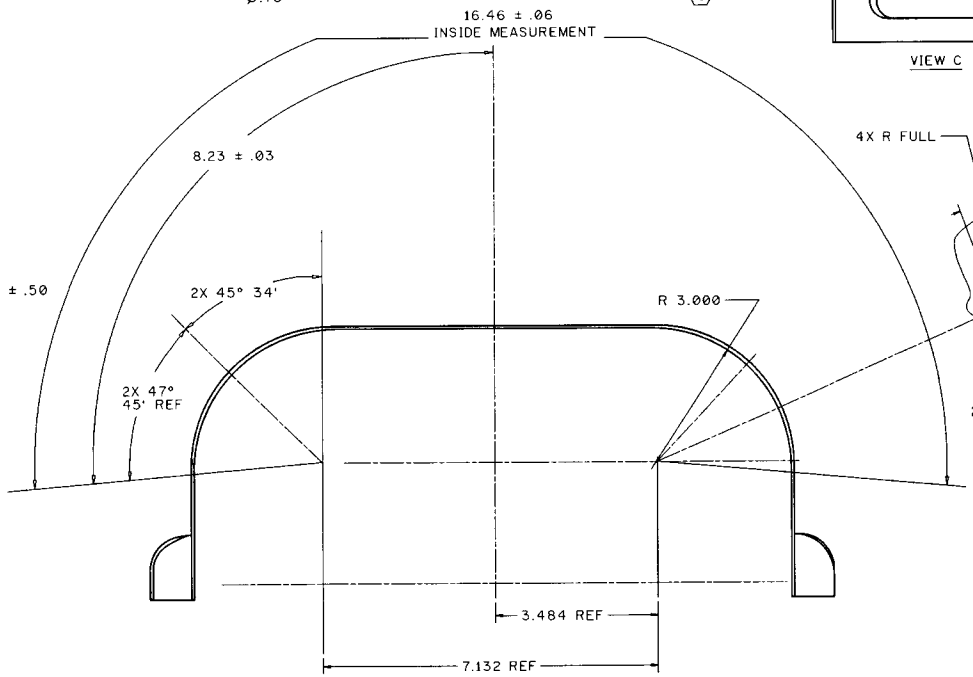

SECTION B-B

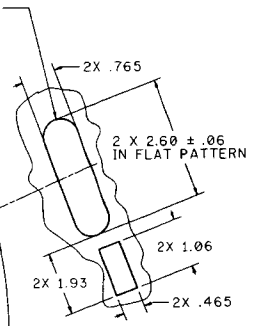

PART NO. 11829647

PMIC		DO NOT SCALE DRAWING UNLESS OTHERWISE SPECIFIED DIMENSIONS ARE IN INCHES TOLERANCES ON DECIMAL: 2 PL ± .03, 3 PL ± .015 FRACTION: ±0° 30'	CONTRACT NUMBER
MECHANICAL PROPERTIES		THIRD ANGLE PROJECTION	CONTRACTOR
YP			DRAWN BY R.C.R. DATE(YR-MO-DA) 94-01-04
TS			CHECKER / ENGINEER
ELZ			DRAWING APPROVAL
RA			
BH		MATL ENGR	DESIGN APPROVAL
RH		CADDS REV	
	NEXT ASSY	USED ON	
	APPLICATION		

DESIGN ACTIVITY: U.S. ARMY ARMAMENT RESEARCH, DEVELOPMENT AND ENGINEERING CENTER PICATINNY ARSENAL, NEW JERSEY 07806-5000

TARGET, 3-D

SIZE	CAGE CODE	
F	19200	11829647

SCALE 1/1 | UNIT WT. | SHEET 2

DISTRIBUTION STATEMENT A
APPROVED FOR PUBLIC RELEASE
DISTRIBUTION IS UNLIMTED.

SMCAR FORM 69, 1 DEC 87(TEMP) REPLACES SMCAR FORM 69, 1 JUL 87(TEMP)
WHICH MAY BE USED UNTIL EXHAUSTED

NOTES:
1. MAT'L - HIGH DENSITY POLYETHYLENE, PHILLIPS "MARLEX" NO. 6001 OR EQUAL.
   THE FOLLOWING PHYSICAL PROPERTIES SHALL APPLY
   DENSITY: 0.940 TO 0.980 WITH 0.960 PREFERRED
   MELT INDEX RANGE OF 0.1 TO 0.45 (ASTM D 1238)
   FLEXURAL MODULUS 220,000 P.S.I. (ASTM D 790)
   HEAT SOFTENING POINT: 260°F (ASTM D1525)
2. COLOR FOREST GREEN NUMBER 34079 OR FED-STD-595.
3. THICKNESS AFTER FORMING: .095-.015 THRU ALL SECTIONS.
4. FLATNESS TOLERANCE: LONGITUDINAL DIRECTION -
   FORWARD BOW .37 INCHES
   BACKWARD BOW 2.25 INCHES
   TRANSVERSE DIRECTION -
   FORWARD BOW .18 INCHES
   BACKWARD BOW 1.75 INCHES
5. MIL-W-13553 APPLIES.
6. ALL FILLETS .09 R. ALL CORNERS .06 R. UNLESS OTHERWISE SPECIFIED.
7. MIL-T-13560 APPLIES.

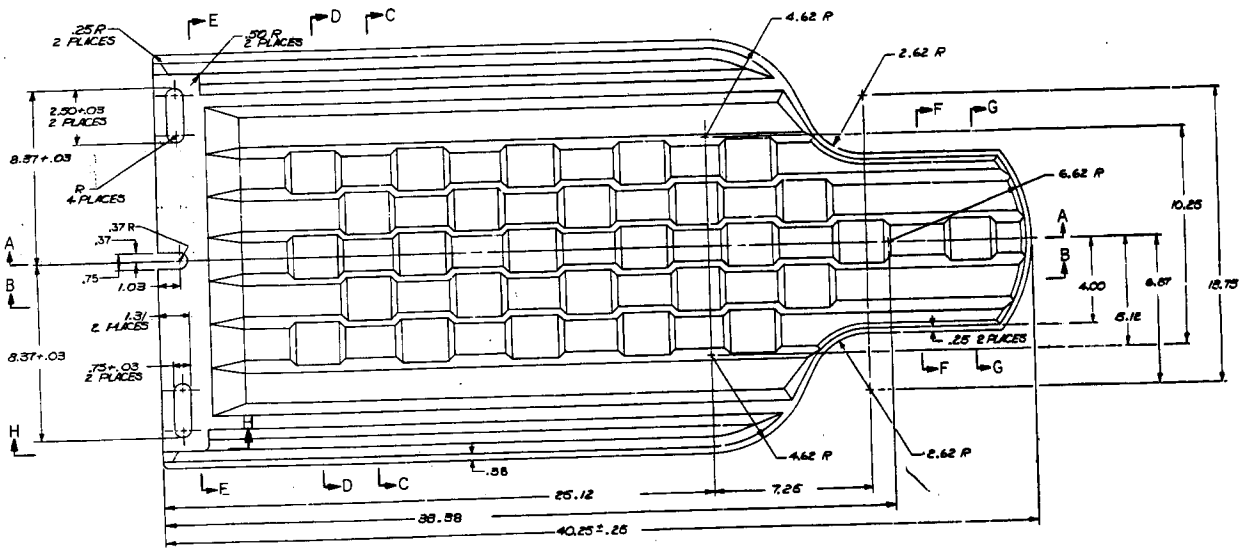

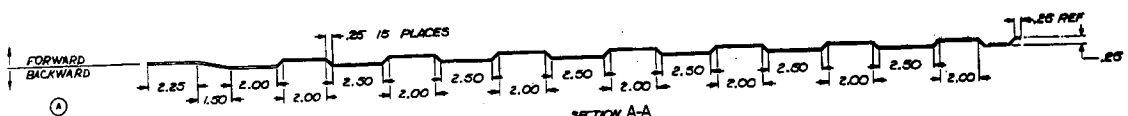

SECTION A-A

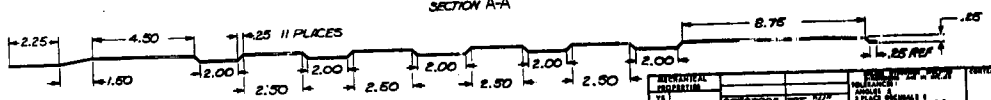

SECTION B-B

REVISIONS				
SYM	ZONE	LTR	DESCRIPTION	DATE
		A	TLR [illegible] NOR 7[illegible]-0886	[illegible]
		B	NOR W[illegible]2013	80-09-28
		C	NOR W[illegible] 2018 81-01-20	81-[illegible]
		D	ERR 29211316E (ECP W652058/881202)	890809
		E	NOR 015 2015 91-06-31	91-09-10

SH 2	SH 1
REVISION STATUS OF SHEETS	

MECHANICAL PROPERTIES	
TARGET MECH. M-60	
TARGET MECH. M50/M50N	
TARGET MECH. M31(A)	
NEXT ASSY / USED ON	
APPLICATION (CON'T)	

08-07-02	[illegible]
08-07-15	[illegible]
08-07-20	[illegible]
08-07-26	[illegible]
08-07-28	[illegible]
08-1-112	[illegible]
NEXT ASSY / USED ON	
APPLICATION	

SEE NOTE 1

8 FEB 72

TARGET, SILHOUETTE, TYPE "E" KNEELING, POLYETHYLENE

F 19204	12002898

AMSWE Form 4037, 29 Jul 69

NOTES:

1. MAT'L-HIGH DENSITY POLYETHYLENE, PHILLIPS "MARLEX" NO. 6001 OR EQUAL. THE FOLLOWING PHYSICAL PROPERTIES SHALL APPLY AFTER FORMING:
   DENSITY-0.960 GM/CC (ASTM D1505-63).
   MELT INDEX RANGE OF 0.1 TO 0.15 (ASTM D1238-62).
   FLEXUAL MODULUS-220,000 PSI. (ASTM D790-63).
   VICAT SOFTENING POINT 260° F (ASTM D1525-58).
2. COLOR-FOREST GREEN, NUMBER 34079 OF FED-STD-595.
3. THICKNESS AFTER FORMING: .095-.015 THRU ALL SECTIONS.
4. FLATNESS TOLERANCE:
   VERTICAL DIRECTION-FORWARD BOW .37, BACKWARD BOW 1.00.
   HORIZONTAL DIRECTION-FORWARD BOW .18, BACKWARD BOW 1.75.
5. MIL-T-13560 APPLIES.
6. MIL-W-13855 APPLIES.
7. ALL FILLETS .09R. ALL CORNER .06R UNLESS OTHERWISE SPECIFIED.
8. THE TOLERANCES ON THE LENGTH OF STIFFENING RIBS SHALL BE +.120-.193.

REVISIONS					
MF	ZONE	LTR	DESCRIPTION	DATE	APPROVED
		A	NORW952011 80-09-26	80-10-07	
		B	NORWOS2018 81-01-20	81-02-19	
		C	NORW4S2091 84-12-20	87-02-23	
		D	ERR Z9Z1131AE (ECP W6S2058/861202)	890809	

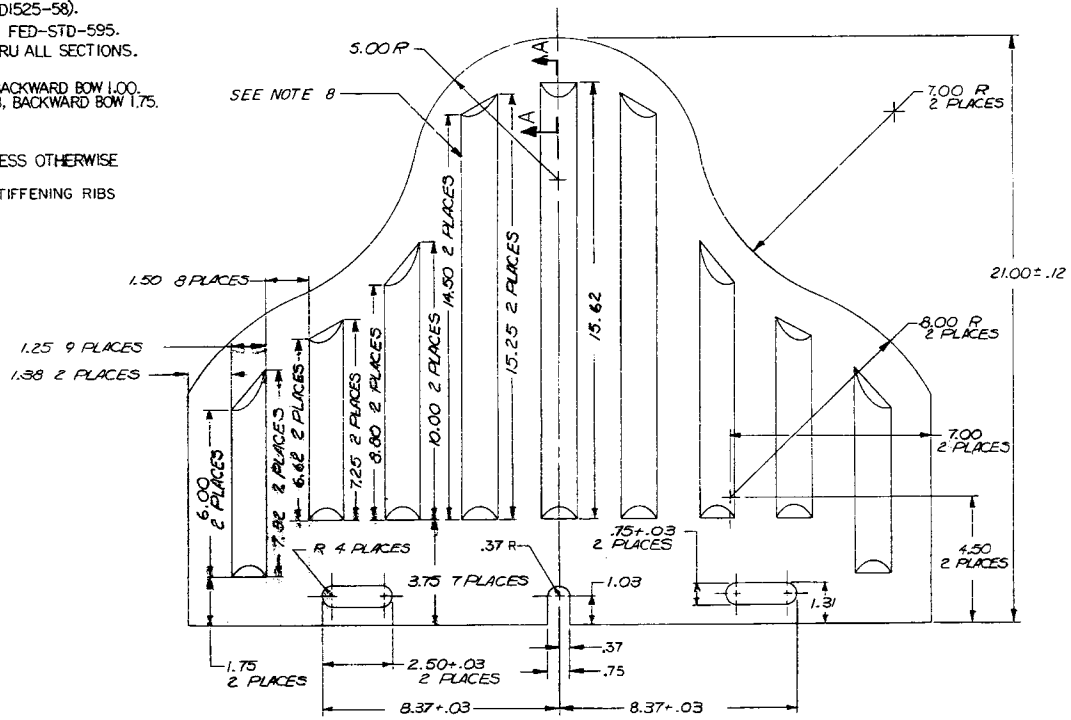

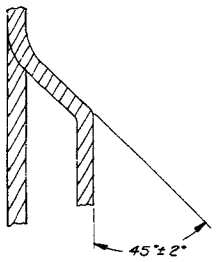

SECTION A-A
SCALE 4/1

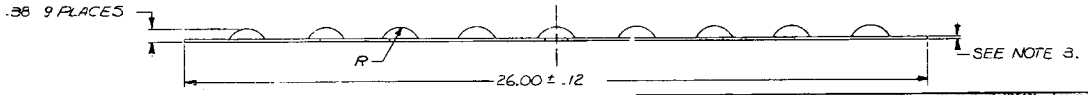

CURRENT DESIGN ACTIVITY FSCM NO. 19204
U.S. ARMY ARMAMENT RESEARCH AND DEVELOPMENT CENTER
DOVER, NEW JERSEY 07801

PART NO. 12002899

MECHANICAL PROPERTIES	
YS MIN	
YS MAX	
EL 2	
RA	
BH	
RH	

NEXT ASSY	USED ON
C5559720	TGT, "F" M1917
F6507393	TGT, "F" M1913
07137419	TGT, "F" PRONE
89-1-112	LIST OF TARGET

APPLICATION

UNLESS OTHERWISE SPECIFIED DIMENSIONS ARE IN INCHES
TOLERANCES:
ANGLES ±
3 PLACE DECIMALS ±
2 PLACE DECIMALS ±.03

MATERIAL: SEE NOTE 1

FINAL PROTECTIVE FINISH

CONTRACT NO

DATE 8 FEB 72

PREPARED
CHECKED
ENGINEER
SUBMITTED
APPROVED

DEPT OF THE ARMY
U.S. ARMY WEAPONS COMMAND
ROCK ISLAND, ILLINOIS, 61201

TARGET, SILHOUETTE, TYPE "F" PRONE, POLYETHYLENE

SIZE	CODE IDENT NO.	DRAWING NO.
D	19204	12002899

SCALE 1/2 SHEET 1 OF 1

AMSWE Form 403D, 13 Nov 70

EDITION OF 29 JUL 69 MAY BE USED