Monday, May 24, 2004 18:16:57

CHAMBER MUST FIT OVER
THESE TABLE DIMENSIONS

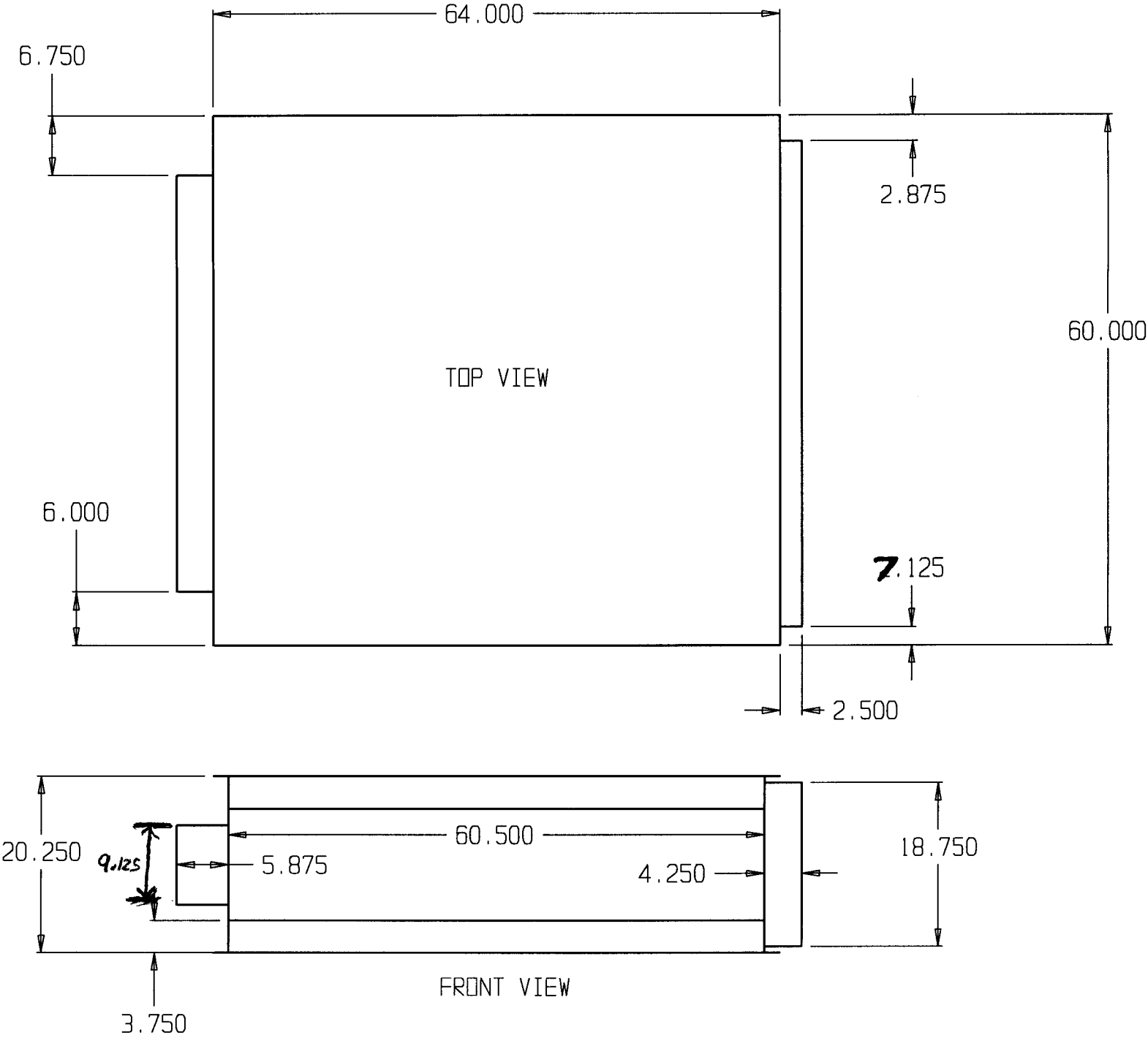

QUESTIONS CALL
QUINN HARTMAN 309-782-3642
BILL MEYER 309-782-5404

FIG. 12
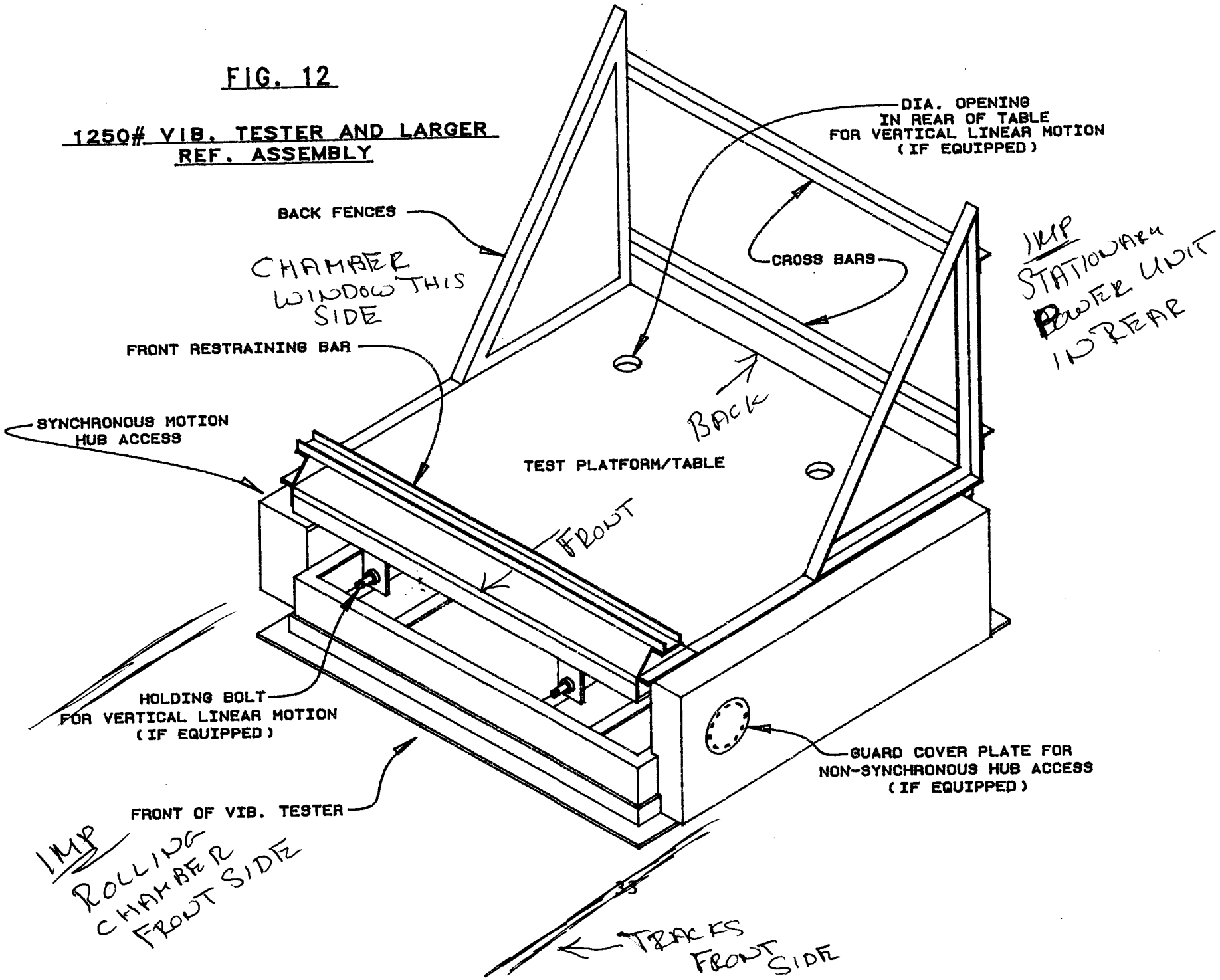
1250# VIB. TESTER AND LARGER REF. ASSEMBLY