NOTES:

1. APPLICABLE STANDARDS/SPECIFICATIONS:
   A. ASME Y14.100
   B. ASME Y14.5M
   C. UL 458.

2. IDENTIFICATION OF THE "SUGGESTED SOURCE(S) OF SUPPLY" HEREON IS NOT TO BE CONSTRUED AS A GUARANTEE OF PRESENT OR CONTINUED AVAILABILITY AS A SOURCE OF SUPPLY FOR THE ITEM(S).

3. ESSENTIAL CHARACTERISTIC AND FUNCTIONS:
   A. THE INVERTER SHALL A HAVE DUAL OUTPUT OF 120/240 VAC, 60Hz SINGLE PHASE.
   B. THE INVERTER SHALL HAVE A CONTINUOUS RATING OF 3200 WATTS.
   C. BE UL 458 LISTED FOR INVERTER SYSTEM FOR LAND VEHICLES.
   D. THE INVERTER SHALL HAVE HIGH SURGE CAPABILITY TO START A ROTARY AIR COMPRESSOR WITH A 2 HP INDUCTION MOTOR.
   E. THE COOLING FAN SHALL BE THERMALLY CONTROLLED AND BE LOCATED TO VENT AS DEPICTED.
   F. ALL INVERTER CONTROL FEATURES AND THE GROUND FAULT PROTECTION OUTLET SHALL BE LOCATED AS DEPICTED.
   G. 24 VDC INPUT POINT SHALL BE CAPABLE OF ACCEPTING A 4/0 AWG WIRE FASTENING TO A SINGLE BARREL ALUMINUM SCREW LUG TYPE "A" 300MCM.
   H. 120/240 VAC 1ø OUTPUT POINT OF THE INVERTER SHALL PROVIDE 2 HOT (BLACK), 1 NETURAL (WHITE), AND 1 GROUND (GREEN) LEADS 10 AWG X 6" LONG
   I. THE INVERTER SHALL HAVE ONE 120 VAC, GROUND FAULT PROTECTED OUTLET.
      IAW UL2003, UL STD 943 CLASS A UL STD 498 AND TEST LABEL.
   J. THE INVERTER SHALL BE CAPABLE OF ACCEPTING INPUT VOLTAGES OF 22 TO 28 VDC.
   K. THE INVERTER SHALL HAVE AN AUTOMATIC LOW BATTERY VOLTAGE SHUTDOWN AT 21 VDC WITH SURGE DELAY.
   L. INVERTER UNIT PROTECTION SHALL CONSIST OF THE FOLLOWING: AUTOMATIC ELECTRONIC SHORT CIRCUIT/ OVERLOAD PROTECTION, AUTOMATIC HIGH TEMPERATURE SHUTDOWN, AND OUTPUT CIRCUIT BREAKER PROTECTION.
   M. INDICATOR LIGHTS FOR EXTERNAL POWER, INVERTER POWER, LOW VOLTAGE INPUT, OVERLOAD, HIGH TEMPERATURE, AND BATTERY VOLTAGE SHALL BE PROVIDED.
   N. THE WEIGHT OF THE INVERTER SHALL NOT EXCEED 70 POUNDS.
   O. THE SWITCHING TRANSISTORS OF THE INVERTER SHELL BE MOSFET TECHNOLOGY. THE MINIM PACKAGE SIZE OF THE MOSFET SHALL BE TO-2A7 OR EQUAL.
   P. FEATURES NOT OTHERWISE SPECIFIED MAY VARY AT THE OPTION OF THE MANUFACTURER.
   Q. ALL CIRCUIT BOARDS SHALL BE CONFORMAL COATED."

NOT FOR FUTURE PRODUCTION

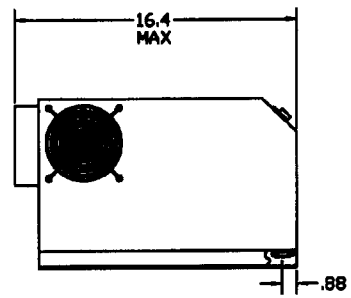

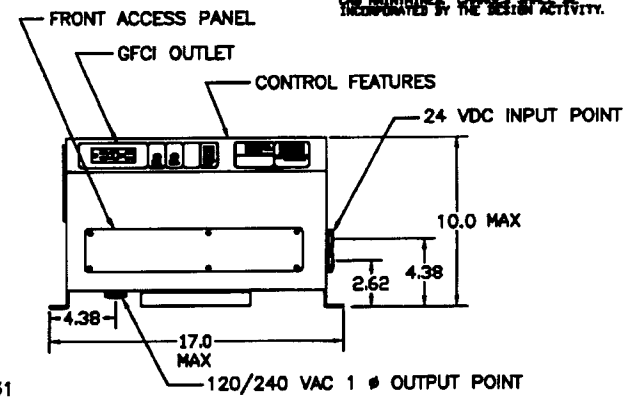

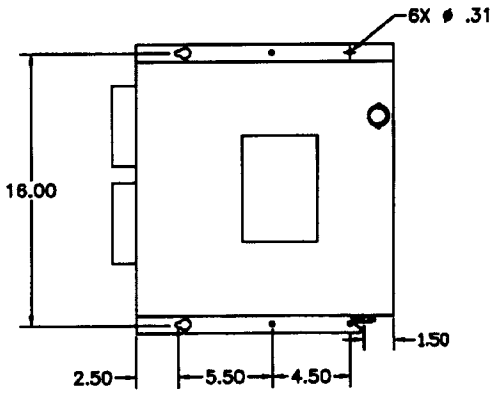

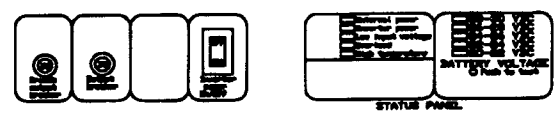

EXPLODED VIEW OF CONTROL FEATURES

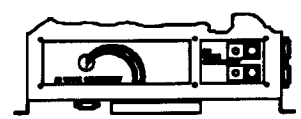

VIEW FROM BEHIND FRONT ACCESS PANEL
ELECTRICAL CONNECTIONS POINTS

SUGGESTED SOURCE(S) OF SUPPLY			
GOVT. PART NO.	VENDOR(S)		
	ADDRESS	CAGE CODE	MFR'S PART NO.
11B257010	DIMENSIONS UNLIMITED, INC. 1800 BUERKLE ROAD ST. PAUL, MN 55110	0CC80	MIL-24/3200 DQ

DISTRIBUTION STATEMENT A. APPROVED FOR PUBLIC RELEASE; DISTRIBUTION IS UNLIMITED.

VENDOR ITEM DRAWING PART NO. 11B257010

DC/AC POWER INVERTER UNIT

D 59678 11B257010

SCALE NONE SHEET 1 OF 1

4