11B257002_59678_CP_ A_0001_0001_U_N
July 13, 2004 8:03 AM

REVISIONS				
SYM	LTR	DESCRIPTION	DATE (YR-MO-DA)	APPROVED
	-	PRODUCTION RELEASE - [illegible]	95-12-01	SCN
	A	[illegible]	97-11-18	SCN

CAD MAINTAINED. CHANGES SHALL BE INCORPORATED BY THE DESIGN ACTIVITY

1. APPLICABLE STANDARDS/SPECIFICATIONS
   A. MIL-STD-100
   B. ANSI Y14.5M-1982.

2. IDENTIFICATION OF THE "SUGGESTED SOURCE(S) OF SUPPLY" HEREON IS NOT TO BE CONSTRUED AS A GUARANTEE OF PRESENT OR CONTINUED AVAILABILITY AS A SOURCE OF SUPPLY FOR THE ITEM(S).

3. FEATURES:
   A. THE STYLE DEPICTED IS FOR PURPOSES OF ILLUSTRATION ONLY.
   B. FEATURES NOT OTHERWISE SPECIFIED MAY VARY AT THE OPTION OF THE MANUFACTURER.
   C. DIMENSIONS WITHOUT TOLERANCES ARE REFERENCE ONLY.
   D. ELECTRICAL: 170 AMP OUTPUT.

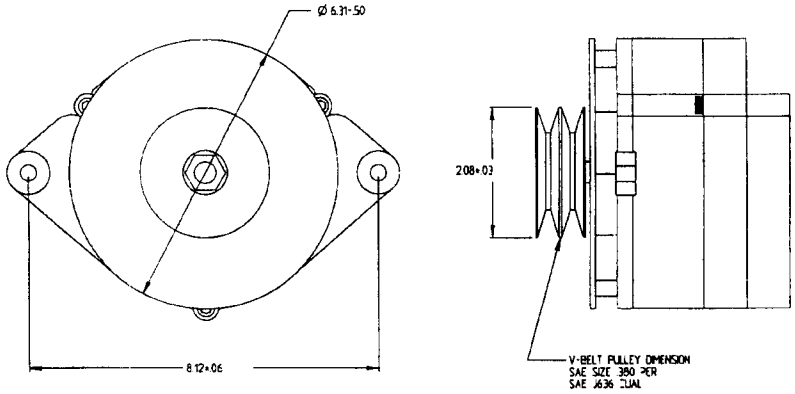

SUGGESTED SOURCE(S) OF SUPPLY			
PART NO	VENDOR(S) ADDRESS	CAGE CODE	PART NO
11B257002	LESTER MFG. INC. 6542 BAKER BLVD. 65946 FORT WORTH, TX 76118 1-800-433-7628	94600	GWMT

DISTRIBUTION STATEMENT A. APPROVED FOR PUBLIC RELEASE; DISTRIBUTION IS UNLIMITED

VENDOR ITEM DRAWING

PART NO. 11B257002

DO NOT SCALE DRAWING

ALTERNATOR, WELDING

SIZE	CAGE CODE	
D	59678	11B257002

SCALE NONE | SHEET 1 OF 1